Installation manual
Drying Cabinet

DC7-10HP

Electrolux PROFESSIONAL

Original instructions

438941210/GB, IE
2026.10.21

Contents

1 Safety Precautions 5
1.1 General safety information 5
1.2 Symbols 5
2 Warranty terms and exclusions 6
3 Technical data 7
3.1 Dimensions drawing 7
3.2 Technical data 8
4 Master and Slave heat pumps 9
5 Unpacking 10
5.1 Installation kit 10
6 Weight reduction to facilitate installation 11
6.1 Remove the hanger section 11
6.2 Remove the doors 12
6.3 Remove the dehumidifier units 14
7 Positioning/Attachment 17
7.1 Ventilate the room 17
7.2 Horizontal adjustment 17
7.3 Attachment to the wall 18
8 Connection to floor drain 19
9 Electrical connection 20
9.1 Connecting to an external payment system 21
9.2 Restore factory settings 21
9.3 Alternative electrical connection 21
9.4 Connection to reservation system 22
10 Language setting 23
11 Function check 24
12 Disposal information 25
12.1 Appliance recyclability and disposal 25
12.1.1 Recyclability 25
12.1.2 Procedure regarding appliance disposal and component / material recovery 25
12.2 Disposal of packing 25

The manufacturer reserves the right to make changes to design and component specifications.

1 Safety Precautions

WARNING. This appliance is intended only for drying textiles washed in water.

DO NOT MODIFY THIS APPLIANCE.

Servicing shall be carried out only by authorized personnel.

Only authorized spare parts shall be used.

When performing service or replacing parts, the power must be disconnected.

Stationary appliances not fitted with means for disconnection from the supply mains having a contact separation in all poles that provide full disconnection under overvoltage category III, means for disconnection must be incorporated in the fixed wiring in accordance with the wiring rules.

A-weighted emission sound pressure level at workstations: <70 dB

Additional requirements for the following countries: AT, BE, BG, HR, CY, CZ, DK, EE, FI, FR, DE, GR, HU, IS, IE, IT, LV, LT, LU, MT, NL, NO, PL, PT, RO, SK, SI, ES, SE, CH, TR, UK:

- This appliance can be used in public areas.
- This appliance can be used by children aged from 8 years and above and persons with reduced physical, sensory or mental capabilities or lack of experience and knowledge if they have been given supervision or instruction concerning use of the appliance in a safe way and understand the hazards involved. Children shall not play with the appliance. Cleaning and user maintenance shall not be made by children without supervision.

Additional requirements for other countries:

- This appliance is not intended for use by persons (including children) with reduced physical, sensory or mental capabilities, or lack of experience and knowledge, unless they have been given supervision or instruction concerning use of the appliance by a person responsible for their safety. Children should be supervised to ensure that they do not play with the appliance.

1.1 General safety information

Do not hose down the machine with water.

In order to prevent damage to the electronics (and other parts) that may occur as the result of condensation, the machine should be placed in room temperature for 24 hours before being used for the first time.

1.2 Symbols

	Caution
	Caution, hot surface
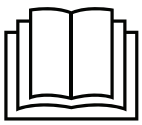	Read the instructions before using the machine.
	Be careful. The drying cabinet is top heavy and can tip over easily.

2 Warranty terms and exclusions

If the purchase of this product includes warranty coverage, warranty is provided in line with local regulations and subject to the product being installed and used for the purposes as designed, and as described within the appropriate equipment documentation.

Warranty will be applicable where the customer has used only genuine spare parts and has performed maintenance in accordance with Electrolux Professional AB user and maintenance documentation made available in paper or electronic format.

Electrolux Professional AB strongly recommends using Electrolux Professional AB approved cleaning, rinse and descaling agents to obtain optimal results and maintain product efficiency over time.

The Electrolux Professional AB warranty does not cover:

- service trips cost to deliver and pick up the product;
- installation;
- training on how to use/operate;
- replacement (and/or supply) of wear and tear parts unless resulting from defects in materials or workmanship reported within one (1) week from the failure;
- correction of external wiring;
- correction of unauthorized repairs as well as any damages, failures and inefficiencies caused by and/or resulting from;
  - insufficient and/or abnormal capacity of the electrical systems (current/voltage/frequency, including spikes and/or outages);
  - inadequate or interrupted water supply, steam, air, gas (including impurities and/or other that does not comply with the technical requirements for each appliance);
  - plumbing parts, components or consumable cleaning products that are not approved by the manufacturer;
  - customer’s negligence, misuse, abuse and/or non-compliance with the use and care instructions detailed within the appropriate equipment documentation;
  - improper or poor: installation, repair, maintenance (including tampering, modifications and repairs carried out by third parties not authorized third parties) and modification of safety systems;
  - Use of non-original components (e.g.: consumables, wear and tear, or spare parts);
  - environment conditions provoking thermal (e.g. overheating/freezing) or chemical (e.g. corrosion/oxidation) stress;
  - foreign objects placed in- or connected to- the product;
  - accidents or force majeure;
  - transportation and handling, including scratches, dents, chips, and/or other damage to the finish of the product, unless such damage results from defects in materials or workmanship and is reported within one (1) week of delivery unless otherwise agreed;
- product with original serial numbers that have been removed, altered or cannot be readily determined;
- replacement of light bulbs, filters or any consumable parts;
- any accessories and software not approved or specified by Electrolux Professional AB.

Warranty does not include scheduled maintenance activities (including the parts required for it) or the supply of cleaning agents unless specifically covered within any local agreement, subject to local terms and conditions.

Check on Electrolux Professional AB website the list of authorized customer care.

3 Technical data

3.1 Dimensions drawing

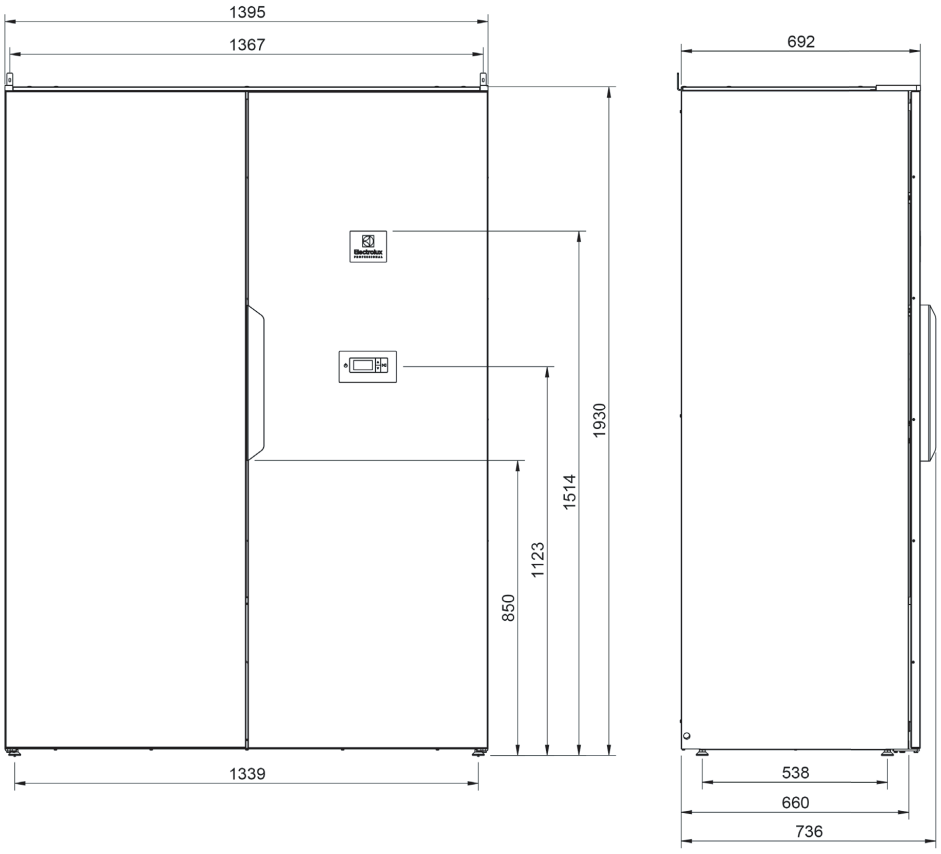

fig.X05609

3.2 Technical data

Recommended capacity:		10 kg of laundry
Drainage capacity:		46 g/min (At rated capacity 4 kg, 100% cotton load at 50% initial moisture dried to 0%).
Electrical connection:		230V 1~, 50 Hz, 10 A
Power:		1.85 kW
Main fan capacity:		1175 m^3/h (Free blowing flow per fan, two fans in the system).
Hanging length:		21 meters
Dimensions:	Height	1930 mm
	Width	1395 mm
	Depth	692 mm
Weight:		211 kg
Noise level:		48 dB (A)
Leak test:		28 bar
Average heat emission per drying cycle used to assess ventilation need*:		0.7 kW

* For assistance with dimensioning necessary ventilation needs, contact authorized ventilation technician. For sufficient ventilation all sources introducing heat need to be taken into account plus all other parameters effecting the ventilation need. Climate zone, building parameters, room size, etc.

This product contains flammable refrigerant: R290

Hermetically sealed

Type of refrigerant:	R290
Refrigerant quantity:	2 x 0.13 kg
Total factor for global warming potential:	0.02
CO_2 equivalents:	0.0000052 tonne

Connections

Connection, condensation	Plastic hose dim ⌀ 10 mm. 3 m hose included.

Energy consumption and drying times

Drying of centrifuged laundry **)

Programs:		Normal drying
Energy consumption:	kWh / kg of laundry	0.31
Energy dried water:	kWh / liter	0.62
Drying time ***):	minutes	60

**) The values may vary depending on:

- speed during spin cycle
- temperature, humidity in the room
- air circulation in the room (supply air, exhaust air)
- settings in the parameter list regarding moisture sensor and time for the SUN program

The values relate to a 6 kg load with 50% residual moisture.

***) The drying cabinet reconditions 5 minutes after the textiles have dried

4 Master and Slave heat pumps

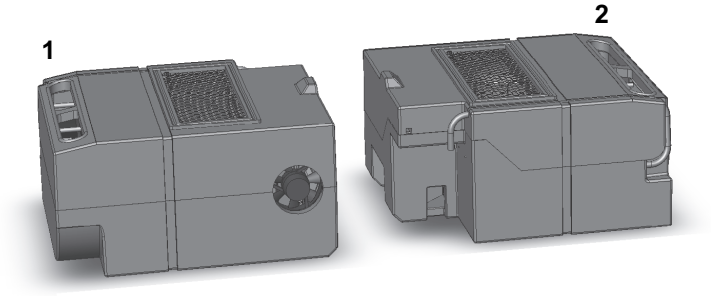

fig.W01396

1	*MASTER*
2	*SLAVE*

The drying cabinet contains two heat pumps, a MASTER and a SLAVE.

The heat pump on the left is the MASTER and the one on the right is the SLAVE.

As the name implies, the MASTER controls the process, while the SLAVE follows. If the SLAVE becomes inoperable, the drying cabinet will still be able to work, but at reduced power. However, if the MASTER were to stop working, the drying cabinet will stop. In such case, it is possible to continue the process by reconfiguring the SLAVE to temporarily make it the MASTER. This is described in more detail in the Service Manual.

It is not normally possible to perform heat pump servicing in the field. If servicing is required, the complete units must be removed and sent to Nimo-Verken AB, which has an exchange system for complete units.

The electrical connection is found on the connection panel of each unit. The panels face each other and are depicted in the figure below.

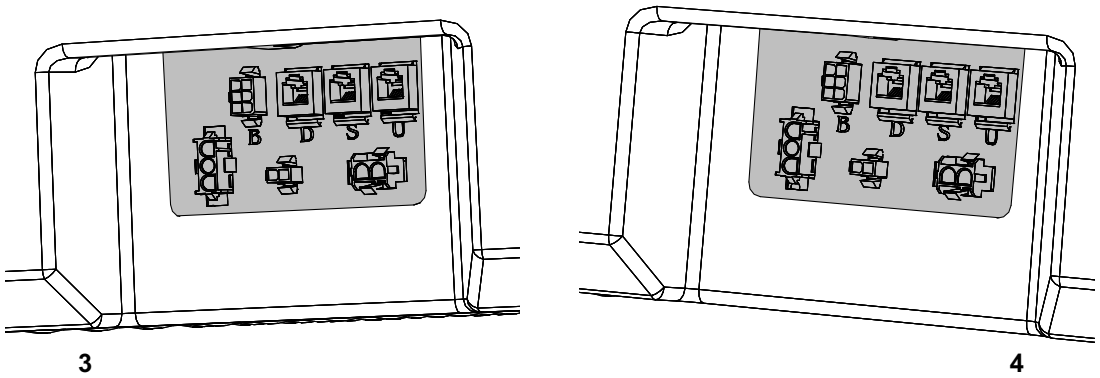

fig.W01397

3	**MASTER, left**
4	**SLAVE, right**

5 Unpacking

Removal all packing materials. Do not use sharp objects, as this could damage the product.

Packaging materials such as plastic and styrofoam should be kept out of reach of children.

5.1 Installation kit

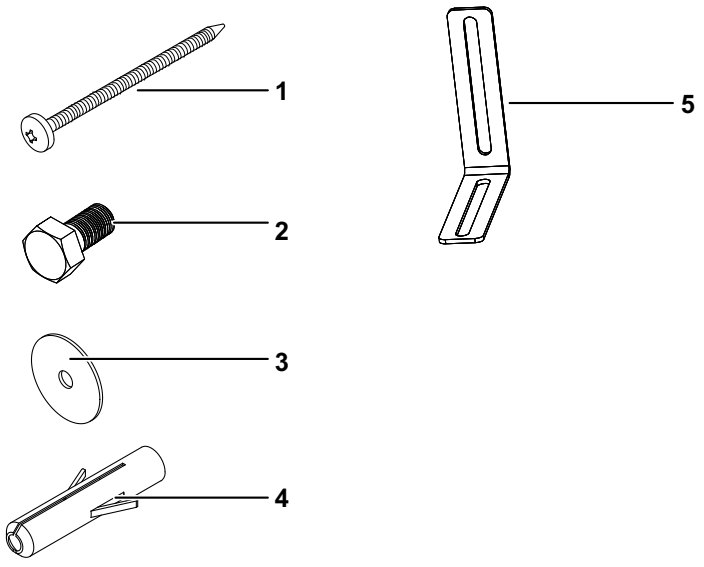

fig.X05888

1	Screw T6S 6x75 galvanized for wall mounting
2	Screw M6S 8x16 for mounting bracket
3	Washer BRB 8.4x17x1.6
4	Wall plug
5	Mounting bracket for wall mounting

6 Weight reduction to facilitate installation

The following can be done to reduce the weight of the drying cabinet and thereby facilitate installation.
If all of the measures are implemented, the weight of the drying cabinet will be cut almost in half.

- **Remove the hanger section**
- **Remove the doors**
- **Remove the dehumidifier units**

6.1 Remove the hanger section

- Remove the hanger stop as illustrated.
- Lift and unhook the section.

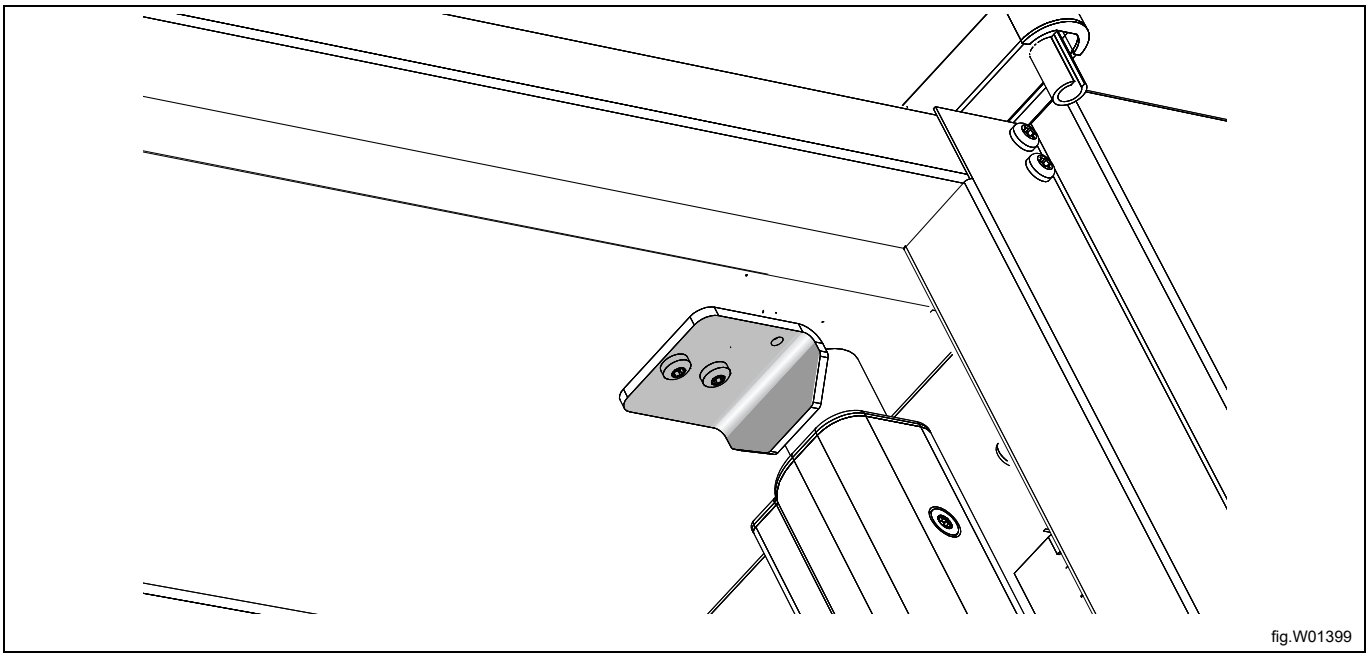

6.2 Remove the doors

Right door

- Undo the four fastening screws securing the hatch (A) and remove the hatch.
- Remove the cover (B) from over the upper hinge and expose the door cable (C). Then detach the cable from the connector (D).
- Remove the upper hinge (E), which is secured with two screws. Carefully pull the hinge loose from the cable. The hinge has a slot where the cable can be threaded in or out.
- Lift the door off of the drying cabinet.

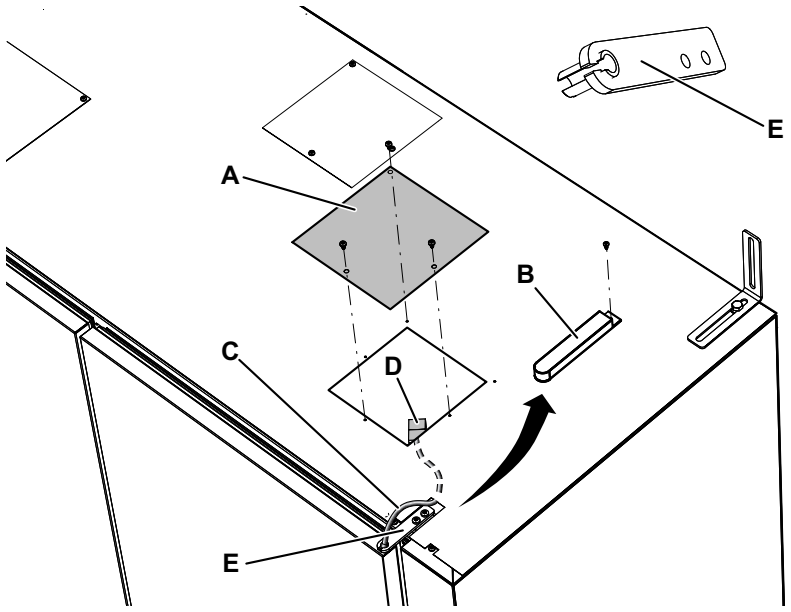

fig.W01400

A	Hatch
B	Cover over the hinge
C	Door cable
D	Connector
E	Upper hinge

Left door

- Remove the cover (F) from over the hinge.
- Remove the hinge (G), which is secured with two screws.
- Lift the door off of the drying cabinet.

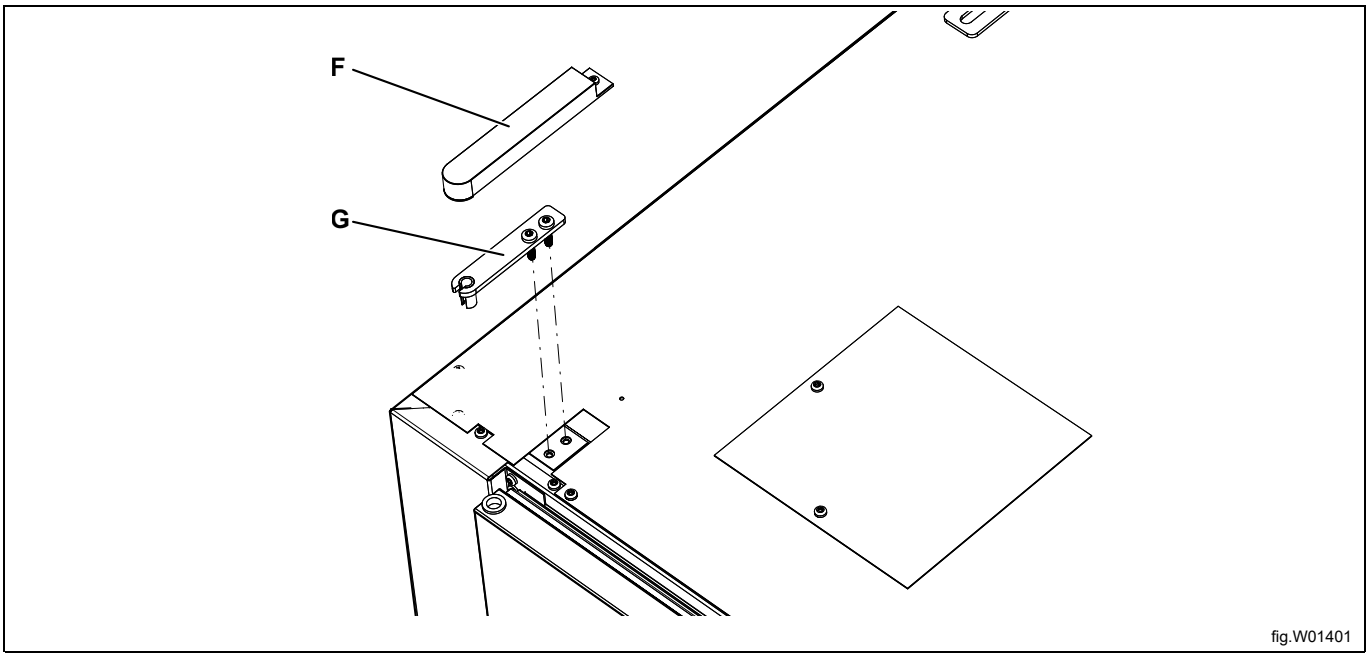

F	Cover over the hinge
G	Upper hinge

6.3 Remove the dehumidifier units

- Detach the front plate (A), which is secured with two screws on the top under plastic plugs. Unplug the electrical connection between the door switches and the left dehumidifier unit. Then remove the front plate.
- Detach the filters (B) and remove them.

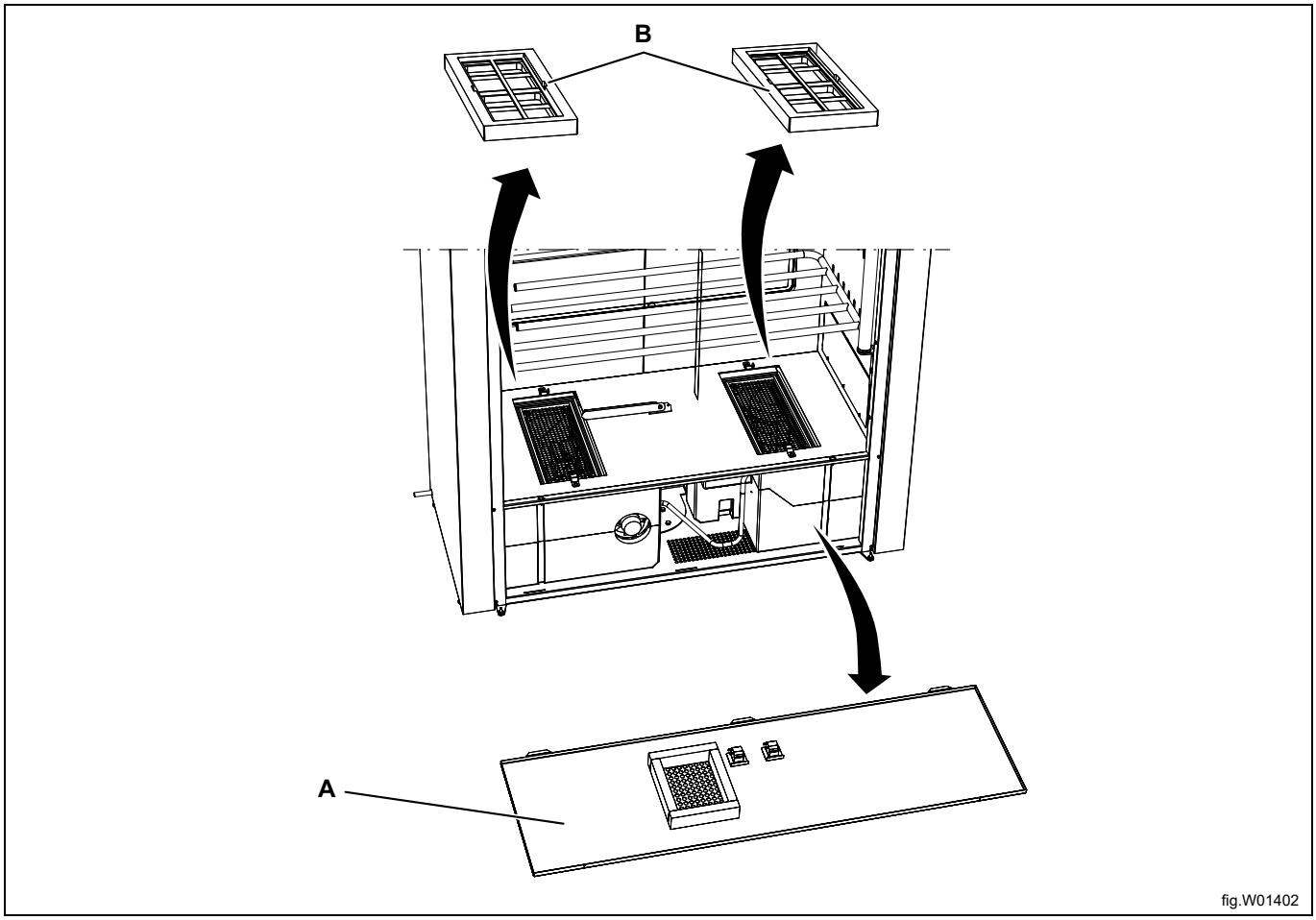

A	Front plate
B	Dirt filter

- Remove the hatch (C), which is secured with three screws at the bottom edge of the hatch. Do this on both the left and the right side.
- Remove the air deflector (D). This is secured with two plastic Torx 40 screws, which are located under cover plugs (E). The air deflector can either be taken out or left in position.

Do not forget to reinstall the cover plugs when reassembling the cabinet. Otherwise, there will be air leakage, resulting in reduced performance.

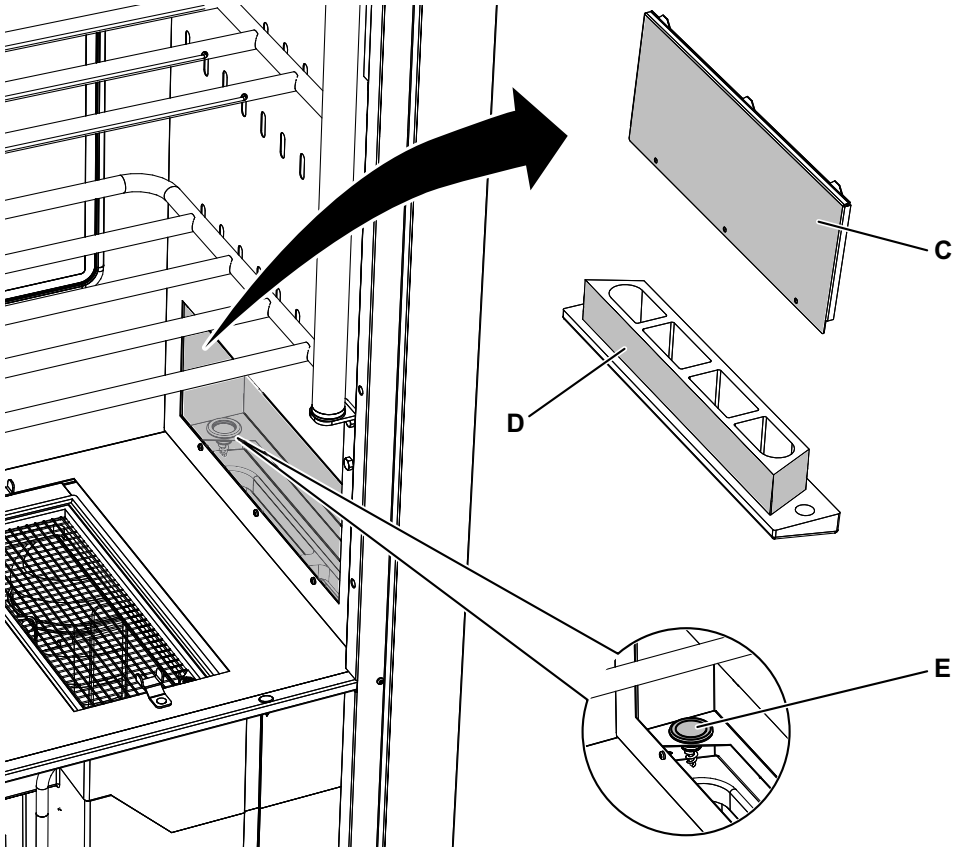

fig.W01403

C	Hatch
D	Air deflector
E	Cover plugs

- Detach the electrical cables as illustrated.

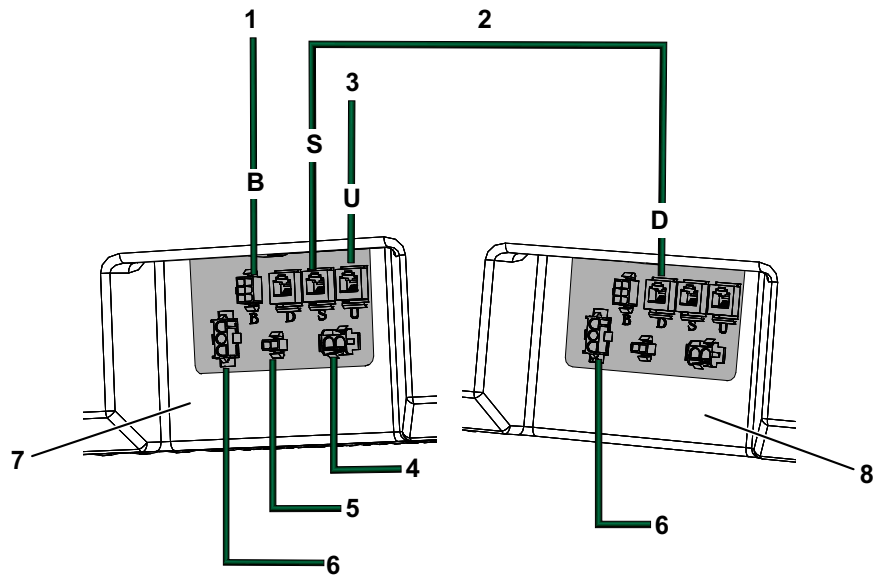

fig.W01404

1	Property's reservation system
2	Loose modular cable, black
3	User interface (control panel), white cable
4	LED lighting
5	Door switch
6	Mains connection
7	*MASTER*
8	*SLAVE*

- Detach the condensation connection (F) from both units.
- Remove the locking washer (G) and take out both of the dehumidifier units.

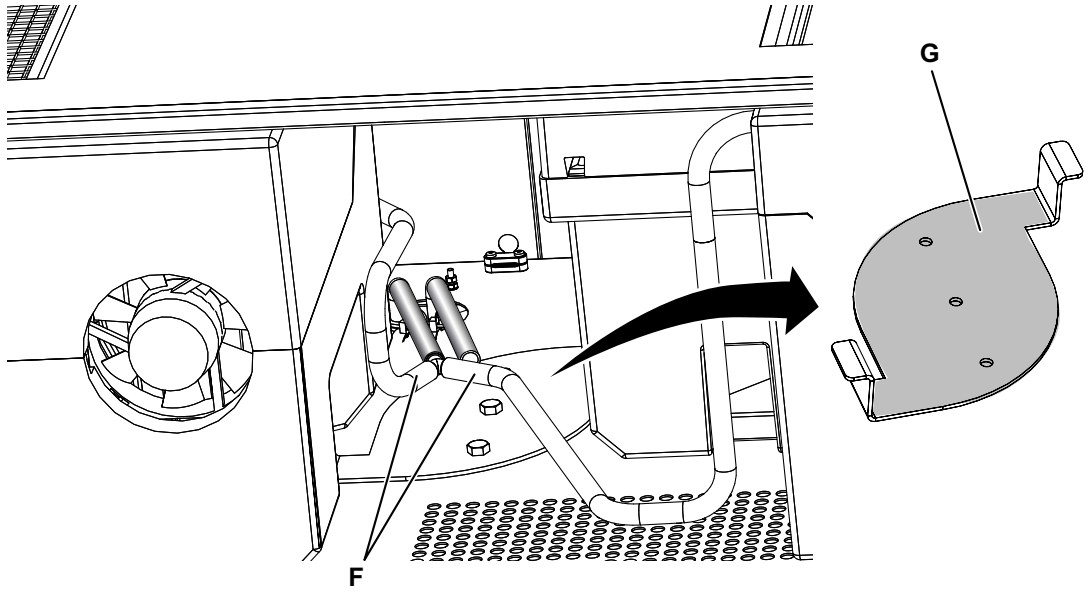

fig.W01405

7 Positioning/Attachment

The drying cabinet is only intended for placement indoors in a dry place

The drying cabinet may not be placed in an environment where high-pressure water is used for cleaning

7.1 Ventilate the room

When the machine is in operation, the room temperature increases. Due to this, the room must have sufficient ventilation.

All sources introducing heat into the same room requires to be considered when dimensioning the ventilation. Heat sources could for example be: more tumble dryers, drying cabinets, washers, ironers, radiators, etc. The combination of several sources for heat introduction leads to an increased need for ventilation flow. Other factors may also influence the needed ventilation flow, such as climate zone, building parameters, room size, etc. For assistance with dimensioning necessary ventilation needs, contact authorized ventilation technician.

7.2 Horizontal adjustment

The drying cabinet must stand level on a flat surface, resting on all four feet.

Adjust the feet from the outside using a hex key. Check that the top edge of the doors match and are aligned.

The adjustable feet have hexagonal grips, size 17.

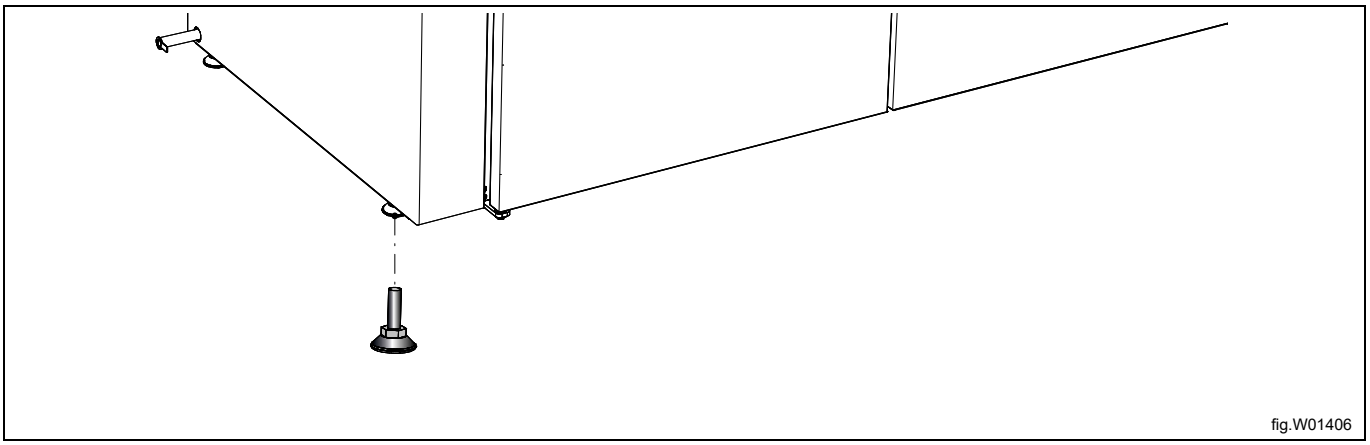

fig.W01406

7.3 Attachment to the wall

The cabinet must be attached to the wall to prevent tipping.

The installation kit contains two angle brackets that are mounted on the upper part of the drying cabinet as illustrated. Use the provided screws. The brackets have grooves for adjustment to the wall.

Secure the cabinet to the wall. The installation kit contains a fastening screw and plastic plugs.

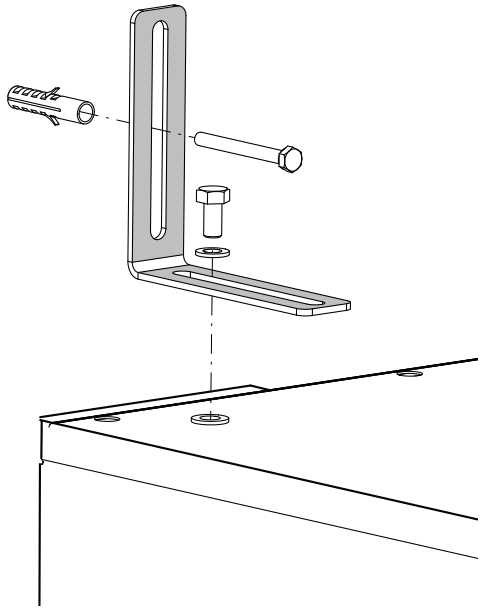

fig.W01407

8 Connection to floor drain

The drying cabinet is delivered from the factory with a pre-mounted hose on the left side, intended for connection to a floor drain.

Attach a new drain hose to one of the cabinet's connections and run it to a drain.

If the drain is higher than the outlet on the cabinet, make sure that the hose runs in an arc down towards the floor and forms a water trap. Otherwise, there is a risk that the condensation water will flow back to the box when the pump is not operating. This can cause the box to become filled with water and the cabinet to stop working.

Note!

Under no circumstances should the hose be bent in such a way as to restrict the flow of water.

If you need to transfer

the outlet of the condensation hose to the right side, carry out the following:

1. Cut the cable tie holding the hose.
2. Thread the hose back through the opening and out through the corresponding hole on the other side of the duct.
3. Move the hose to the right-hand outlet. Secure with a new cable tie.

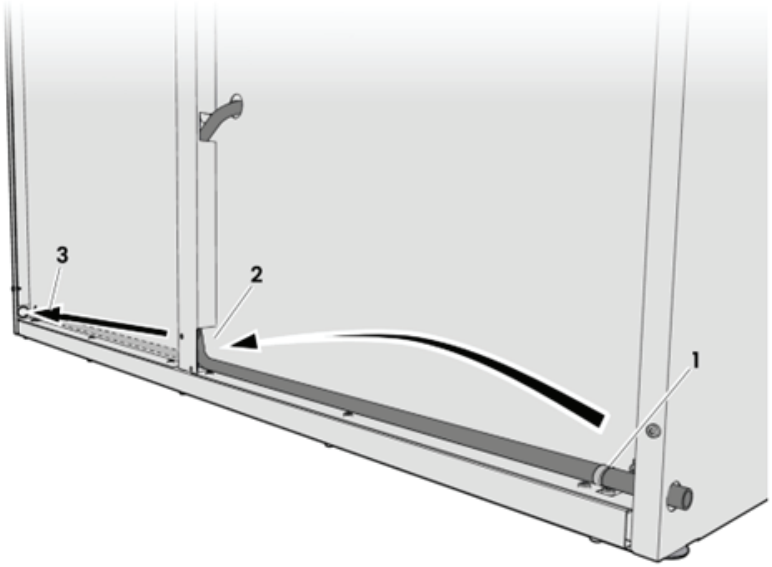

fig.X05575

9 Electrical connection

The electrical installation may only be performed by qualified personnel.

The drying cabinet is delivered ready for connection, with cable and grounded plug.

Electrical connections					
Heating alternative	Main voltage	Hz	Heating power kW	Total power kW	Recommended fuse A
Machines with heat pump	230V 1~	50	[1]	2.6	10

1. Total power and recommended fuse does not depend on the heating power in those cases.

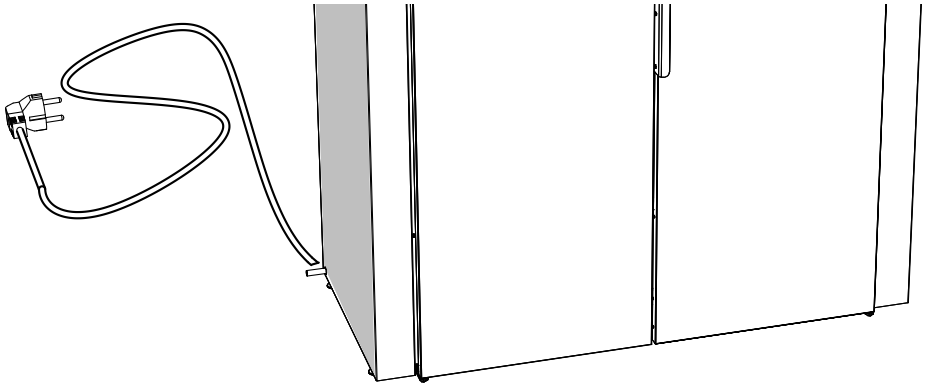

fig.W01410

We recommend that the mains cable be equipped with a **ground fault interrupter**.
The electrical outlet must be in a location that makes it easy to unplug the cabinet if necessary.

9.1 Connecting to an external payment system

Connect the cables from the external payment system to terminal block positions 1 and 2 "EXT SW".

Activate the connection to the external payment system as follows:

- Activate the programming mode: Press STOP + SUN + BUTTERFLY. Press the Stop button first and then the program selection buttons simultaneously. The display lights up and shows "ACCESS 1000". To be able to move on, code 9191 must replace the code 1000.
- After the above, you will be at the first digit "1" in ACCESS 1000. Step to the digit "9" using the program selection buttons SUN (up) or BUTTERFLY (down). Then move to the next digit, in this case "0", using the STOP button. Increase this to "1" using the SUN button and then continue until "9191" is shown. Once you have set the last digit, press the STOP button and **access programming mode**.
- The first parameter and the factory-set value are then shown in the display. The row with the parameter flashes.
- Step forward or back with the SUN (increase) or BUTTERFLY (decrease) button to Parameter 117 is shown. Press STOP to confirm.
- Set the parameter value to 1. This will activate the cabinet for network use. Use the Stop button to exit the parameter.
- Press STOP to save.
- To exit programming mode, press STOP + BUTTERFLY (STOP button first).

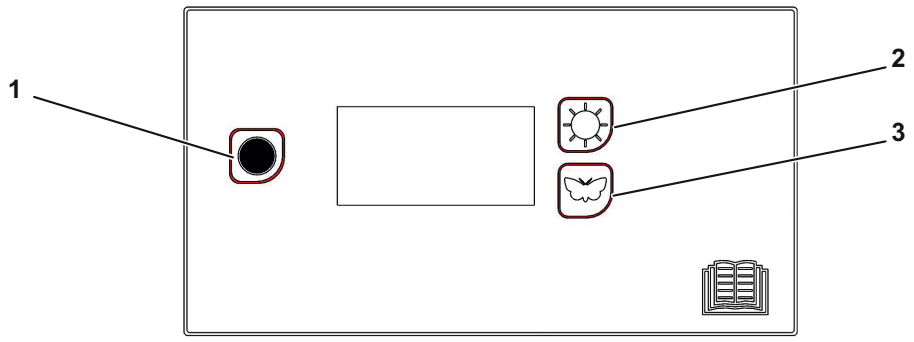

fig.W01296

1	Stop button
2	Sun button Extra drying
3	Butterfly button Normal drying

9.2 Restore factory settings

To restore the electronics to factory settings:

Press the Stop button, and then press both program buttons. The display shows FACT DEFS.

9.3 Alternative electrical connection

The drying cabinet can also be permanently connected. In such case, it must be connected via an all-pole switch installed in the immediate vicinity of the drying cabinet.

The grounded electrical outlet or all-pole switch must be within easy reach of the drying cabinet after it has been installed.

9.4 Connection to reservation system

If the property has a reservation system for the laundry room, the drying cabinet can be connected to this.

Connection is handled via an external electronics box that can be ordered from Electrolux Professional. This is connected to connector B on the Master unit.

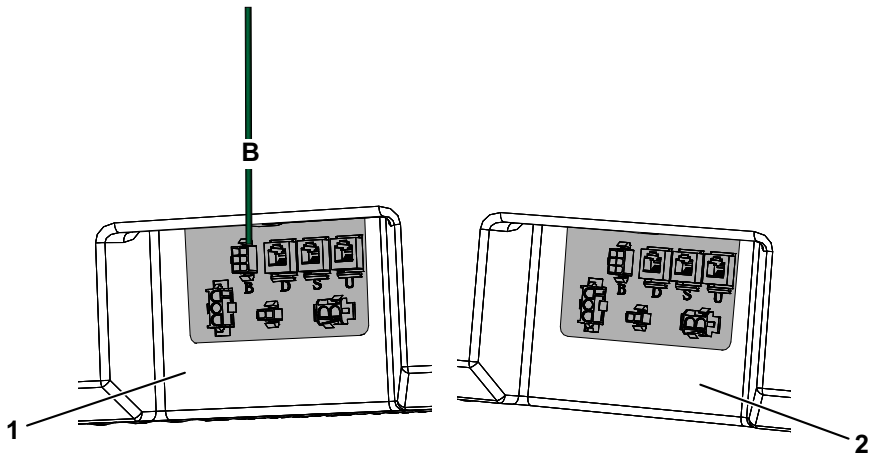

fig.W01411

B	Master unit connector
1	*MASTER*
2	*SLAVE*

10 Language setting

- Activate the programming mode: Press STOP + SUN + BUTTERFLY. Press the Stop button first and then the program selection buttons simultaneously. The display lights up and shows "ACCESS 1000". To be able to move on, code 9191 must replace the code 1000.
- After the above, you will be at the first digit "1" in ACCESS 1000. Step to the digit "9" using the program selection buttons SUN (up) or BUTTERFLY (down). Then move to the next digit, in this case "0", using the STOP button. Increase this to "1" using the SUN button and then continue until "9191" is shown. Once you have set the last digit, press the STOP button and **access programming mode**.
- The first parameter and the factory-set value are then shown in the display. The row with the parameter flashes.
- Step forward or back with the SUN (increase) or BUTTERFLY (decrease) button until "P 105" is shown.
- Once the display shows "P105", press STOP to confirm. The row below will now flash with the language symbol. Each language is assigned a number symbol as listed in the following table. The unit is factory-set to "1" (Swedish).
- Step to the required language with the SUN or BUTTERFLY button.
- Press STOP to save.
- To exit programming mode, press STOP + BUTTERFLY (STOP button first). The display will restart and the new language is set.

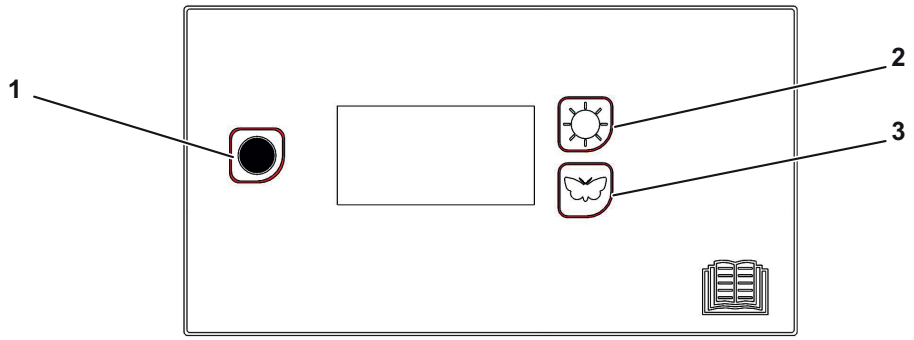

fig.W01296

1	Stop button
2	Sun button Extra drying
3	Butterfly button Normal drying

Language symbol	Display language
0	English
1	Swedish
2	Norwegian
3	Danish
4	Finnish
5	Russian
6	French
7	German

11 Function check

May only be performed by qualified personnel.

A function check must be performed when the installation is finished and before the appliance can be used.
Whenever a repair has been made, a function check must be performed before the appliance can be used again.

- Select any program and check that the drying cabinet is heating and that there are no odd noises.

Ready for use

If all tests are OK the appliance is now ready for use.
If any of the tests fail, or deficiencies or faults are detected, please contact your local service organization or supplier.
Use a mild dish soap with hot water to wipe the inside and outside of the drying cabinet. Wipe thoroughly.

12 Disposal information

12.1 Appliance recyclability and disposal

12.1.1 Recyclability

Our appliances are manufactured using a significant percentage of recyclable metals (such as stainless steel, iron, aluminium, galvanized sheet, copper, etc.), which can be recovered through the local recycling systems, in compliance with the regulations in force in the country of use.

National regulations regarding waste disposal may vary. Disposal of the appliance must therefore be carried out in accordance with the applicable legislation and the directives issued by the competent authorities in the country where the appliance is decommissioned.

The components of the appliance must be separated and disposed of in accordance with their material composition (e.g. metals, oils, greases, plastics, rubber, refrigerant gases, insulating boards and other insulating material, glass wool, LEDs, etc.) and in full compliance with applicable local and international waste management regulations.

Compressors may contain oils and refrigerants fluids - are special waste and has to be recycled on local bases regulations.

12.1.2 Procedure regarding appliance disposal and component / material recovery

This product should not simply be disposed of in the environment at the end of its life cycle; it is imperative instead either to dispose of it in accordance with local environmental regulations, or, preferably, to deliver it whole to an authorized recycling center.

All removed components, including doors and other structural parts, must be delivered together with the appliance to an authorized recycling or dismantling facility.

The dismantling/recycling center will apply state of the art technologies and methods available to them to effectively disassemble the products for best recyclability.

Note that printed circuit boards, electrical motors or other components identified in European Union legislation to be of high critical raw materials recovery potential need to be addressed specifically.

In case of doubts or questions, always refer to your reference customer care service.

Before disposing of the appliance, carefully inspect its physical condition and preservation state, checking for potential leaks of liquids or gases, as well as for broken parts that may pose hazards during handling and subsequent dismantling.

	The symbol on the product indicates that this product should not be treated as domestic waste, but must be correctly disposed of in order to prevent any negative consequences for the environment and human health. For further information on the recycling of this product, contact the local dealer or agent, the customer care service or the local body responsible for waste disposal.

Note!
When dismantling the appliance, any marking, this manual and other documents concerning the appliance must be destroyed.

12.2 Disposal of packing

The packing must be disposed of in compliance with the current regulations in the country where the appliance is used. All the packing materials are environmentally friendly.

They can be safely kept, recycled or burned in an appropriate waste incineration plant. Recyclable plastic parts are marked as following examples.

PE	Polyethylene: • Outer wrapping • Instructions bag
PP	Polypropylene: • Straps
PS	Polystyrene foam: • Corner protectors

Electrolux Professional AB
341 80 Ljungby, Sweden
www.electroluxprofessional.com