Installation manual
Drying Cabinet

DC7-8HP_m

Electrolux PROFESSIONAL

Original instructions

438941220/GB, IE
2026.10.22

Contents

1 Safety Precautions 5
1.1 General safety information 5
1.2 Symbols 5
2 Warranty terms and exclusions 6
3 Technical data 7
3.1 Dimensions drawing 7
3.2 Technical data 7
4 Placement 8
5 Assembly instructions 9
5.1 Assembling the base and electrical cable installation 9
5.2 Frame assembly 10
5.3 Inner base assembly 11
5.4 Install the left rear section 12
5.5 Rear section installation 13
5.6 LED strip installation 14
5.7 Install wiring top panel 15
5.8 Install top panel 16
5.9 Install cable duct 17
5.10 Install air duct 18
5.11 Install hanging bracket 19
5.12 Install insulating boards 20
5.13 Outer side installation 21
5.14 Install outlet fittings 22
5.15 Heat pump installation 22
5.16 Heat pump hoses 23
5.17 Brackets for the heat pump boxes 23
5.18 Install hose on the rear panel 24
5.19 Installation of the heat pump boxes 24
5.20 Install mounting plate outlet fitting 25
5.21 Install filter and bracket 25
5.22 Install cover plate 26
5.23 Install side plates for air duct 26
5.24 Install door switches and front panel 27
5.25 Magnet installation 28
5.26 Shoe rack installation 28
5.27 Door installation 29
5.28 Door handle installation 30
5.29 Install hanger pin on the top panel 30
5.30 Hanger bracket installation 31
5.31 Hanger installation 32
5.32 Top panel installation 34
6 Attachment to the wall 35
7 Ventilating the room 35
8 Electrical connection 36
8.1 Electrical connection of the Master and Slave dehumidification units 36
9 Connection to floor drain 37
10 Function check 38
11 Disposal information 39
11.1 Appliance recyclability and disposal 39
11.1.1 Recyclability 39
11.1.2 Procedure regarding appliance disposal and component / material recovery 39
11.2 Disposal of packing 39

The manufacturer reserves the right to make changes to design and component specifications.

1 Safety Precautions

WARNING. This appliance is intended only for drying textiles washed in water.

DO NOT MODIFY THIS APPLIANCE.

Servicing shall be carried out only by authorized personnel.

Only authorized spare parts shall be used.

When performing service or replacing parts, the power must be disconnected.

Stationary appliances not fitted with means for disconnection from the supply mains having a contact separation in all poles that provide full disconnection under overvoltage category III, means for disconnection must be incorporated in the fixed wiring in accordance with the wiring rules.

A-weighted emission sound pressure level at workstations: <70 dB

Additional requirements for the following countries: AT, BE, BG, HR, CY, CZ, DK, EE, FI, FR, DE, GR, HU, IS, IE, IT, LV, LT, LU, MT, NL, NO, PL, PT, RO, SK, SI, ES, SE, CH, TR, UK:

- This appliance can be used in public areas.
- This appliance can be used by children aged from 8 years and above and persons with reduced physical, sensory or mental capabilities or lack of experience and knowledge if they have been given supervision or instruction concerning use of the appliance in a safe way and understand the hazards involved. Children shall not play with the appliance. Cleaning and user maintenance shall not be made by children without supervision.

Additional requirements for other countries:

- This appliance is not intended for use by persons (including children) with reduced physical, sensory or mental capabilities, or lack of experience and knowledge, unless they have been given supervision or instruction concerning use of the appliance by a person responsible for their safety. Children should be supervised to ensure that they do not play with the appliance.

1.1 General safety information

Do not hose down the machine with water.

In order to prevent damage to the electronics (and other parts) that may occur as the result of condensation, the machine should be placed in room temperature for 24 hours before being used for the first time.

1.2 Symbols

	Caution
	Caution, hot surface
	Read the instructions before using the machine.
	Be careful. The drying cabinet is top heavy and can tip over easily.

2 Warranty terms and exclusions

If the purchase of this product includes warranty coverage, warranty is provided in line with local regulations and subject to the product being installed and used for the purposes as designed, and as described within the appropriate equipment documentation.

Warranty will be applicable where the customer has used only genuine spare parts and has performed maintenance in accordance with Electrolux Professional AB user and maintenance documentation made available in paper or electronic format.

Electrolux Professional AB strongly recommends using Electrolux Professional AB approved cleaning, rinse and descaling agents to obtain optimal results and maintain product efficiency over time.

The Electrolux Professional AB warranty does not cover:

- service trips cost to deliver and pick up the product;
- installation;
- training on how to use/operate;
- replacement (and/or supply) of wear and tear parts unless resulting from defects in materials or workmanship reported within one (1) week from the failure;
- correction of external wiring;
- correction of unauthorized repairs as well as any damages, failures and inefficiencies caused by and/or resulting from;
  - insufficient and/or abnormal capacity of the electrical systems (current/voltage/frequency, including spikes and/or outages);
  - inadequate or interrupted water supply, steam, air, gas (including impurities and/or other that does not comply with the technical requirements for each appliance);
  - plumbing parts, components or consumable cleaning products that are not approved by the manufacturer;
  - customer’s negligence, misuse, abuse and/or non-compliance with the use and care instructions detailed within the appropriate equipment documentation;
  - improper or poor: installation, repair, maintenance (including tampering, modifications and repairs carried out by third parties not authorized third parties) and modification of safety systems;
  - Use of non-original components (e.g.: consumables, wear and tear, or spare parts);
  - environment conditions provoking thermal (e.g. overheating/freezing) or chemical (e.g. corrosion/oxidation) stress;
  - foreign objects placed in- or connected to- the product;
  - accidents or force majeure;
  - transportation and handling, including scratches, dents, chips, and/or other damage to the finish of the product, unless such damage results from defects in materials or workmanship and is reported within one (1) week of delivery unless otherwise agreed;
- product with original serial numbers that have been removed, altered or cannot be readily determined;
- replacement of light bulbs, filters or any consumable parts;
- any accessories and software not approved or specified by Electrolux Professional AB.

Warranty does not include scheduled maintenance activities (including the parts required for it) or the supply of cleaning agents unless specifically covered within any local agreement, subject to local terms and conditions.

Check on Electrolux Professional AB website the list of authorized customer care.

3 Technical data

3.1 Dimensions drawing

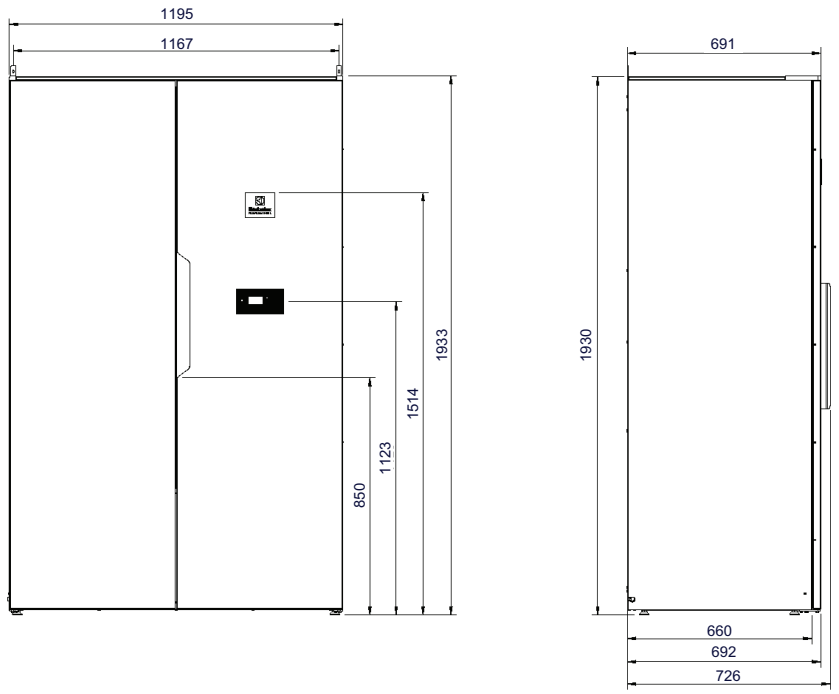

fig.X05478

3.2 Technical data

Recommended capacity:		6–8 kg of laundry
Drainage capacity:		50 g/min (At rated capacity 4 kg, 100% cotton load at 50% initial moisture dried to 0%).
Electrical connection:		230V 1~, 50 Hz, 10 A
Power:		1.85 kW
Main fan capacity:		1175 m³/h (Free blowing flow per fan, two fans in the system).
Hanging length:		18.5 meters
Dimensions:	Height	1930 mm
	Width	1195 mm
	Depth	691 mm
Weight:		200 kg
Noise level:		48 dB (A)
Leak test:		28 bar
Average heat emission per drying cycle used to assess ventilation need*:		0.6 kW

* For assistance with dimensioning necessary ventilation needs, contact authorized ventilation technician. For sufficient ventilation all sources introducing heat need to be taken into account plus all other parameters effecting the ventilation need. Climate zone, building parameters, room size, etc.

This product contains flammable refrigerant: R290

Hermetically sealed

Type of refrigerant:	R290
Refrigerant quantity:	2 x 0.13 kg
Total factor for global warming potential:	0.02
CO_2 equivalents:	0.0000052 tonne

4 Placement

The drying cabinet must be placed indoors in a dry environment.

The drying cabinet should be positioned so that there is plenty of room for working, both for the user and service personnel.

The drying cabinet must stand level on a flat surface, resting on all four feet.

5 Assembly instructions

5.1 Assembling the base and electrical cable installation

Position the base slightly in front of where it should stand on a flat surface.
Install the connection cable according to the illustration, observe the length.

- Base in box 1. 2 pcs.
- Self-tapping screws bag 1. 2 pcs.
- Strain relief bag 1 pc.
- Screw M5 bag 1.
- Spring washer bag 1. 1 pc.
- Connection cable bag 1.

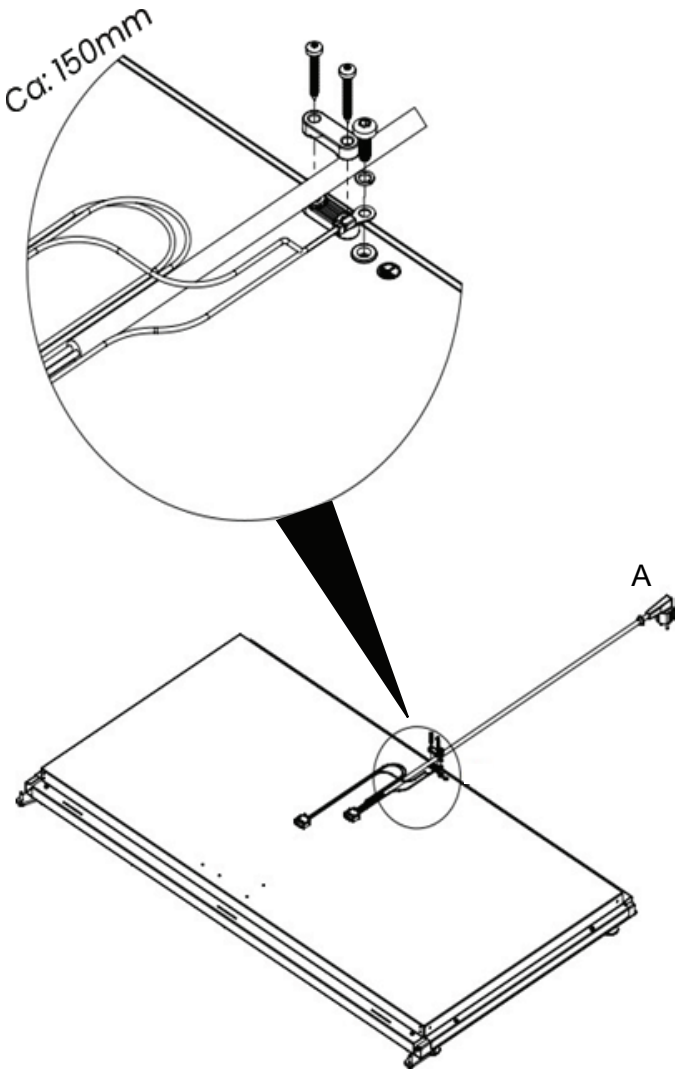

fig.X05434

A = Rubber seal on the exterior of the cabinet

5.2 Frame assembly

L-profile installation, 4 pcs. The rear L-profiles are screwed only from the side.

- L-profiles loose on pallet. 4 pcs
- Screws from bag 2. 8 pcs.

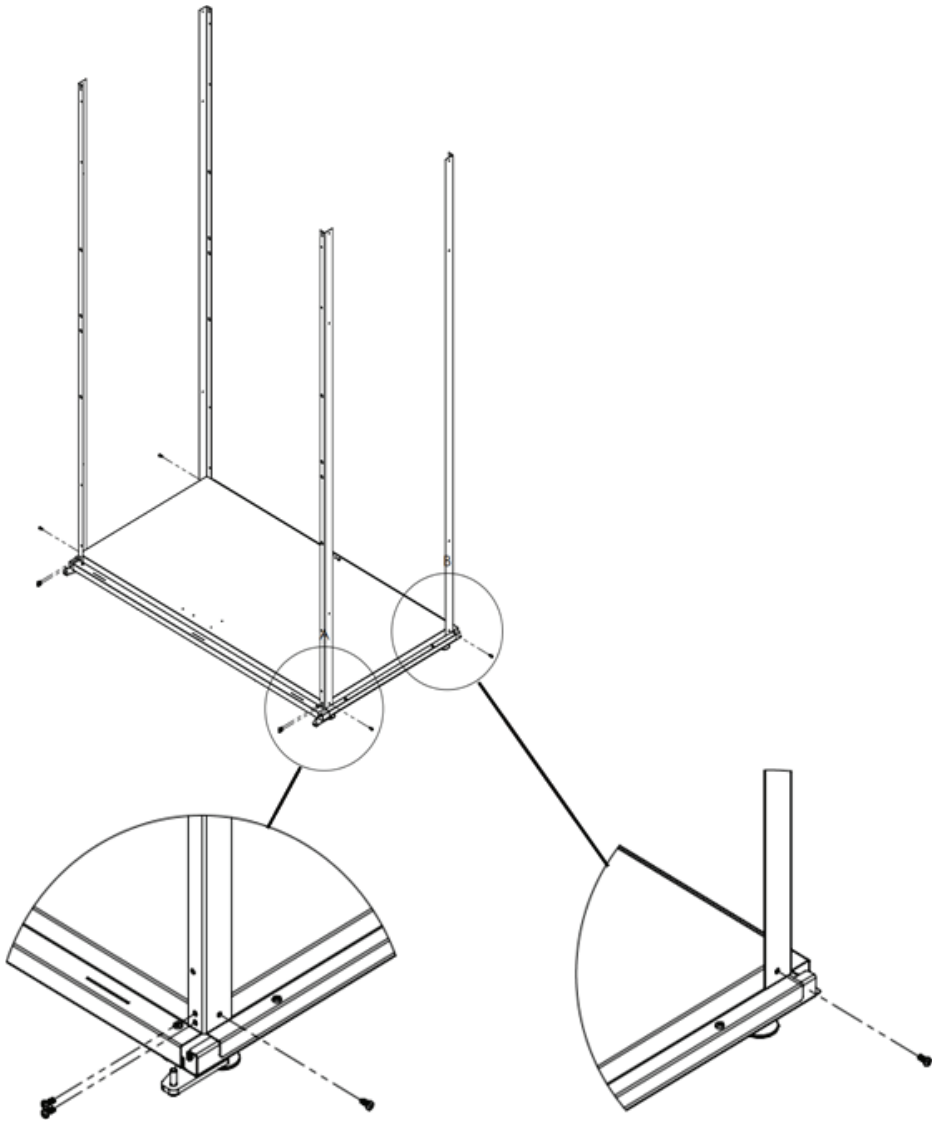

fig.X05435

5.3 Inner base assembly

- Screws from bag 2. 4 pcs.
- Inner base loose on pallet.

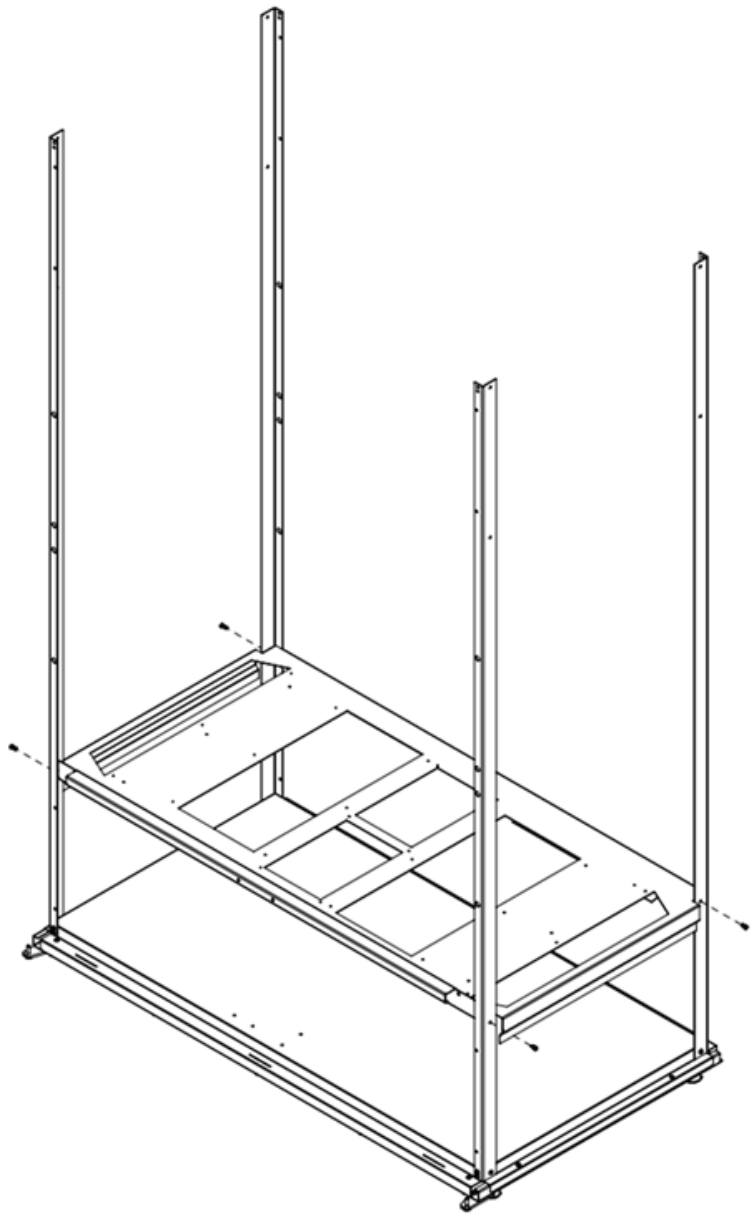

fig.X05436

5.4 Install the left rear section

- Left rear section loose on pallet.
- Screws from bag 2. 8 pcs.
- Grommets bag 1. 2 pcs.

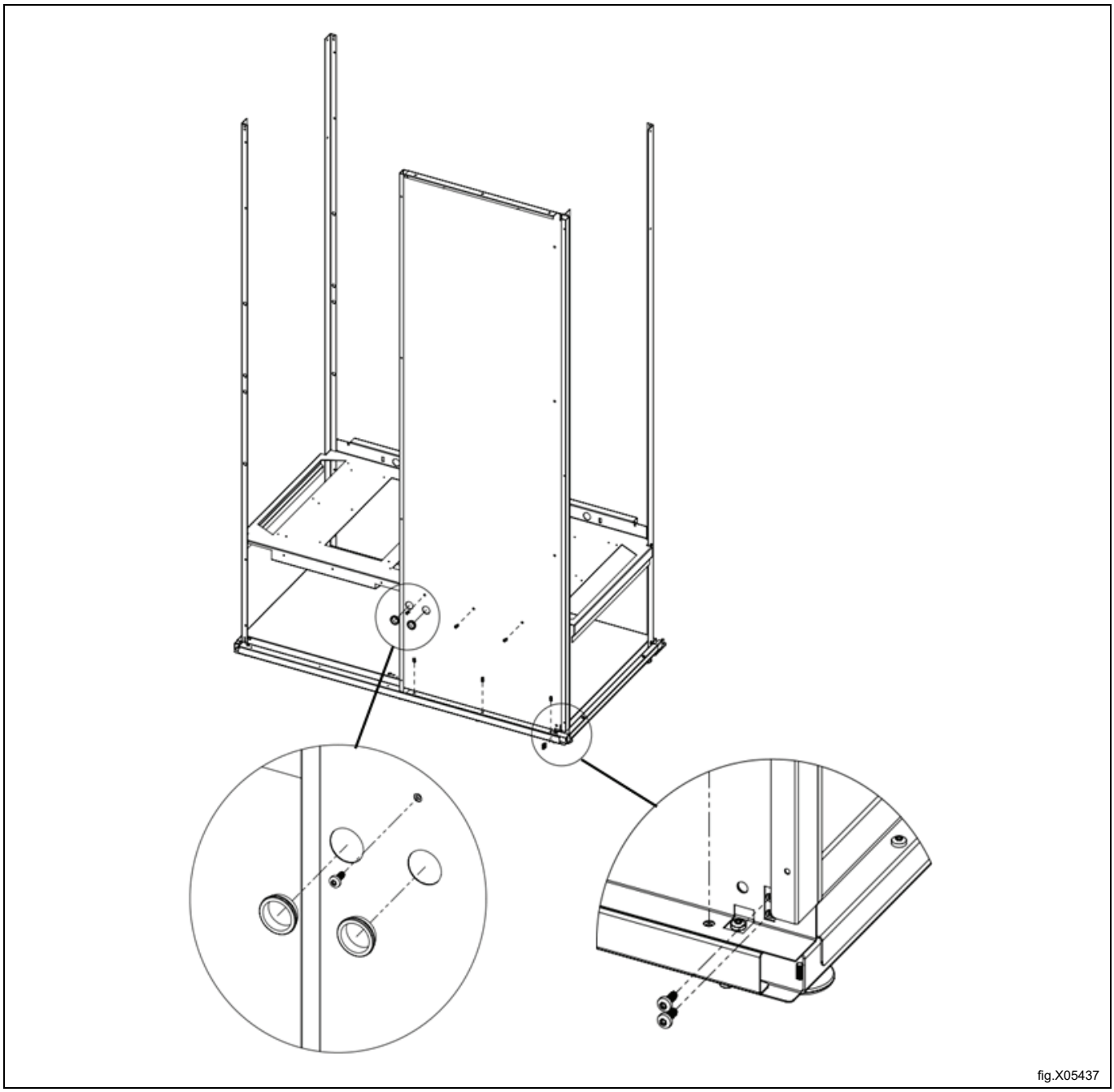

5.5 Rear section installation

- Right rear section loose on pallet.
- Screws from bag 2. 12 pcs.

Place the front grommet rubber on the cable (B).

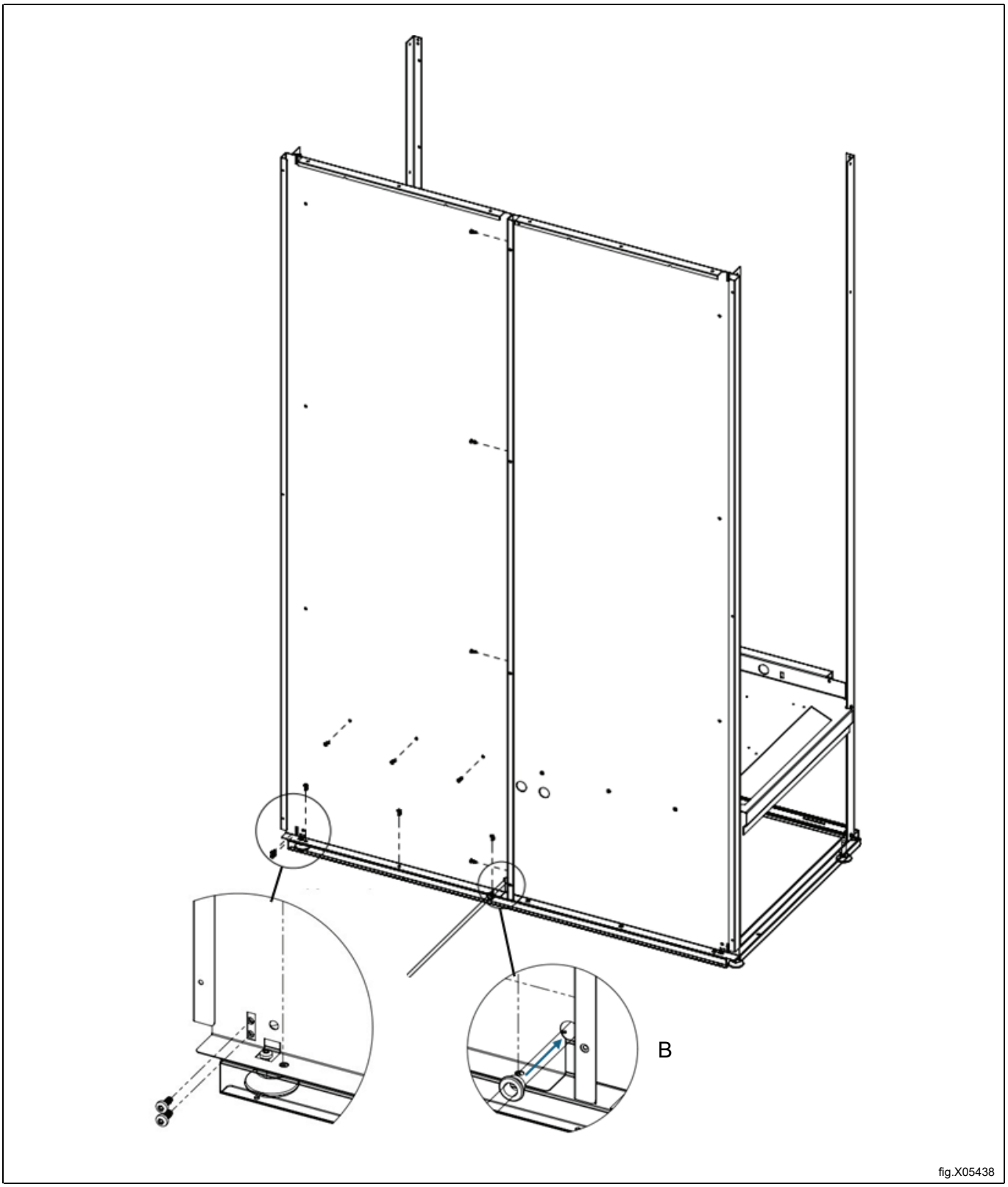

fig.X05438

5.6 LED strip installation

- Top panel from box 1.
- LED strip from bag 3. 2 pcs.
- Screws from bag 3. 4 pcs.

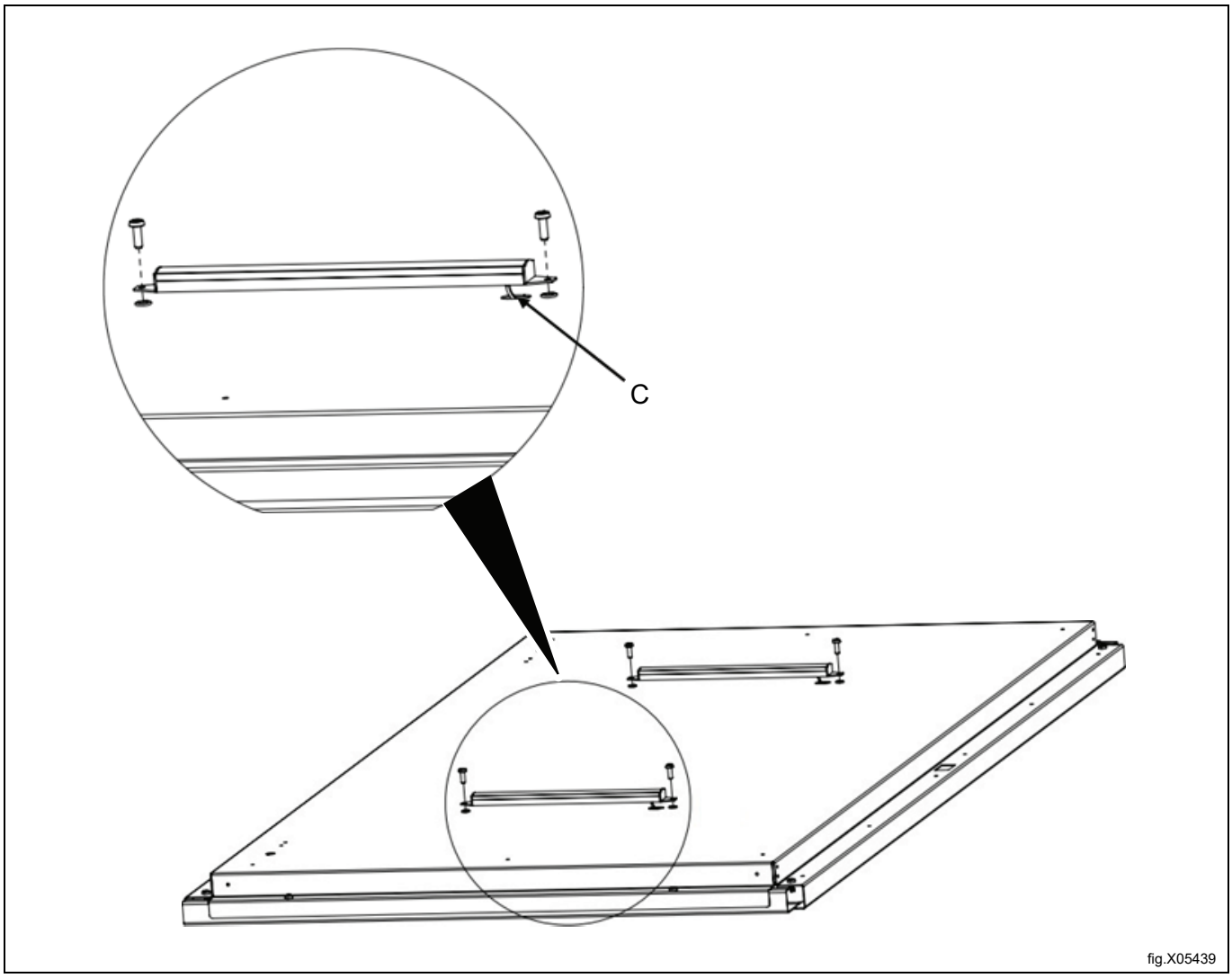

C = Cable.

5.7 Install wiring top panel

Install cables from the LED strips and the long modular cable in the top panel.

- Modular cable approx.: 3 m bag 3.
- Modular joint bag 3.
- LED cables bag 3. 2 pcs.

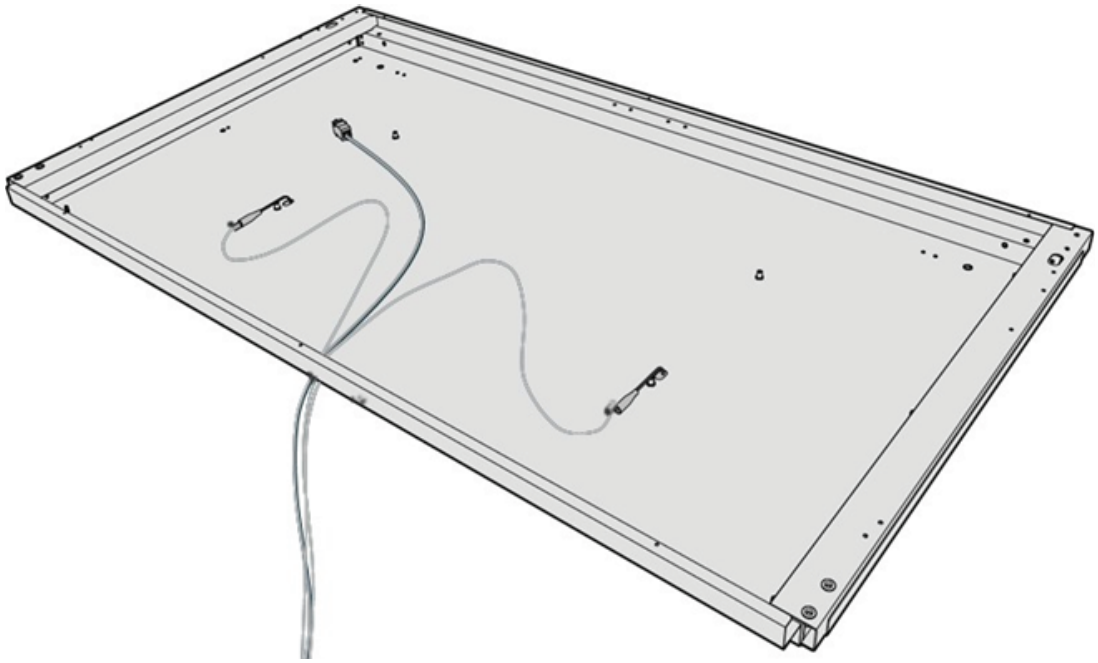

fig.X05440

5.8 Install top panel

Note!
The large oval hole (Aa) must be at the front of the cabinet.

- Screws from bag 2. 18 pcs.

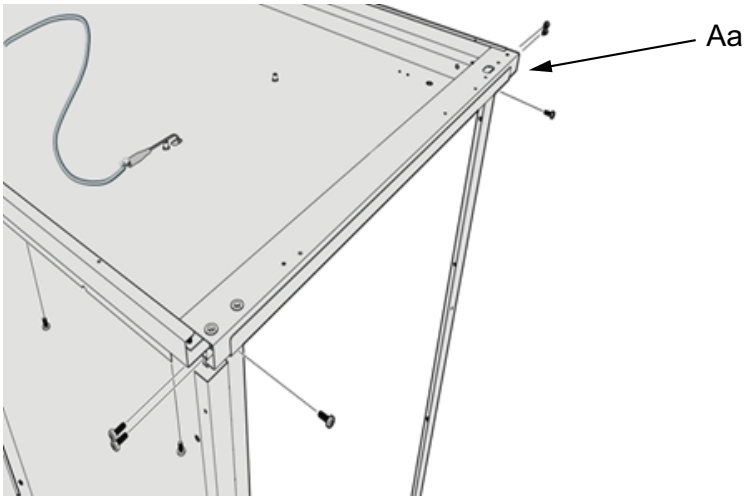

fig.X05441

The cables are inserted through the left grommet seen from behind.
The cables must be inserted approx. 50-60 cm inside the cabinet.

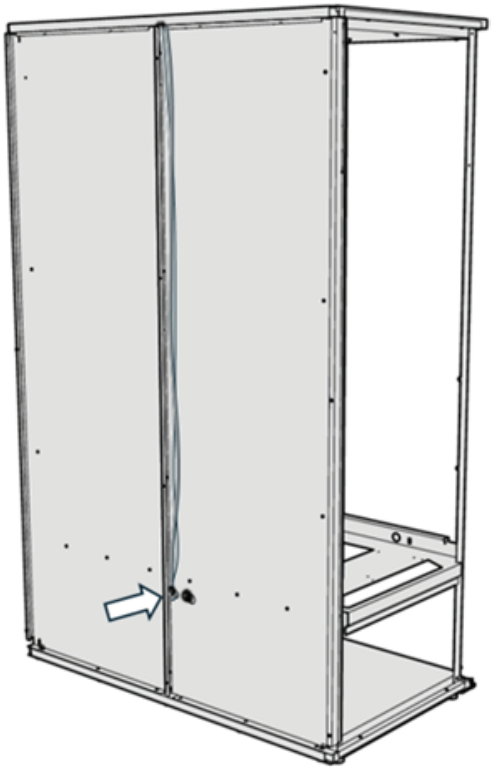

fig.X05442

5.9 Install cable duct

Take care not to pinch the cables and ensure that they are inside the duct.

- Cable duct from box 2.
- Screws from bag 2. 4 pcs.

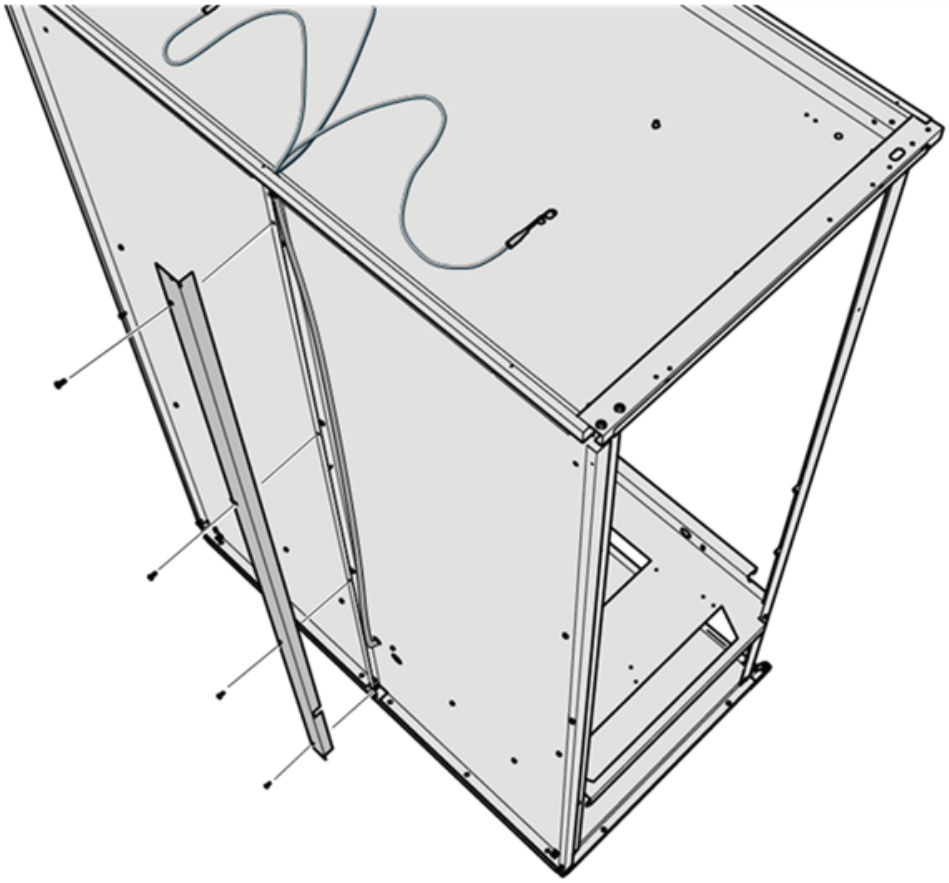

fig.X05443

5.10 Install air duct

Make sure the holes (D) and the bent edge (E) are positioned according to the illustration.

- Right air duct from box 2.
- Left air duct from box 2.
- Screw bag 2. 12 pcs.

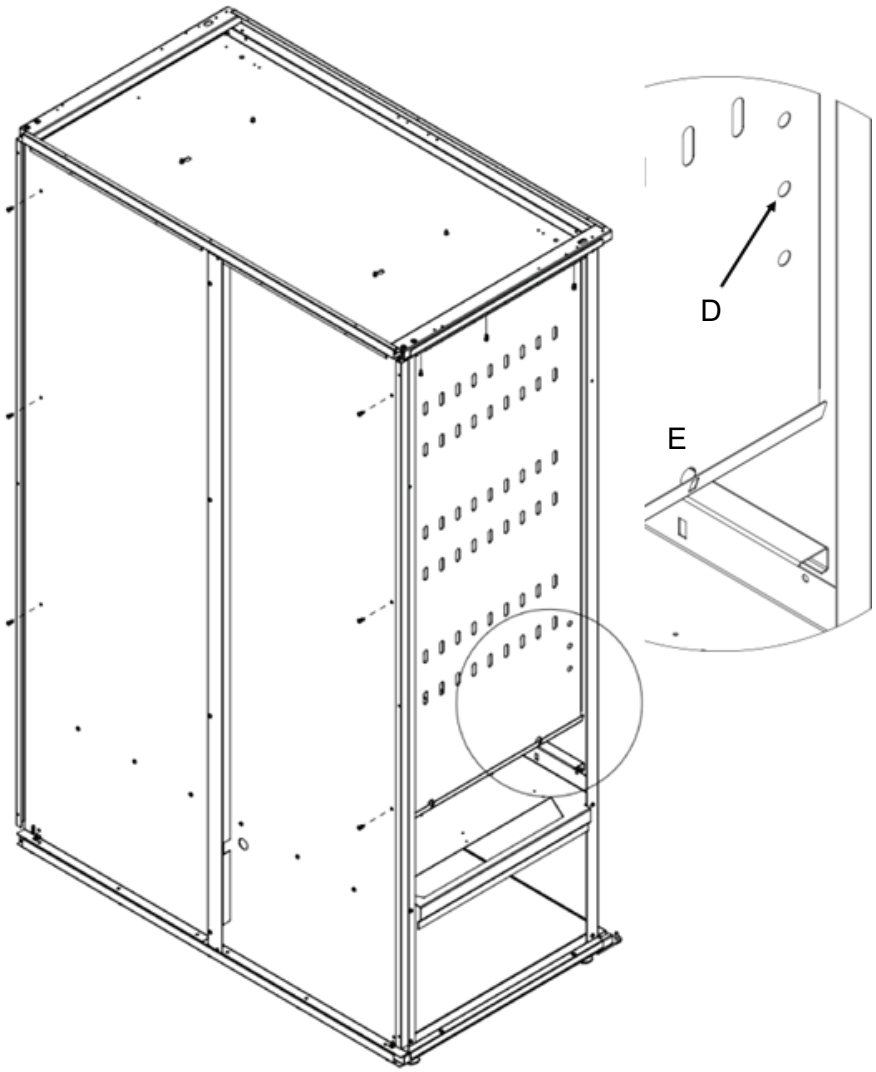

fig.X05444

5.11 Install hanging bracket

- Hanging bracket box 1. 2 pcs.
- Screws M8 bag 4. 4 pcs.
- Tooth washer bag 4.

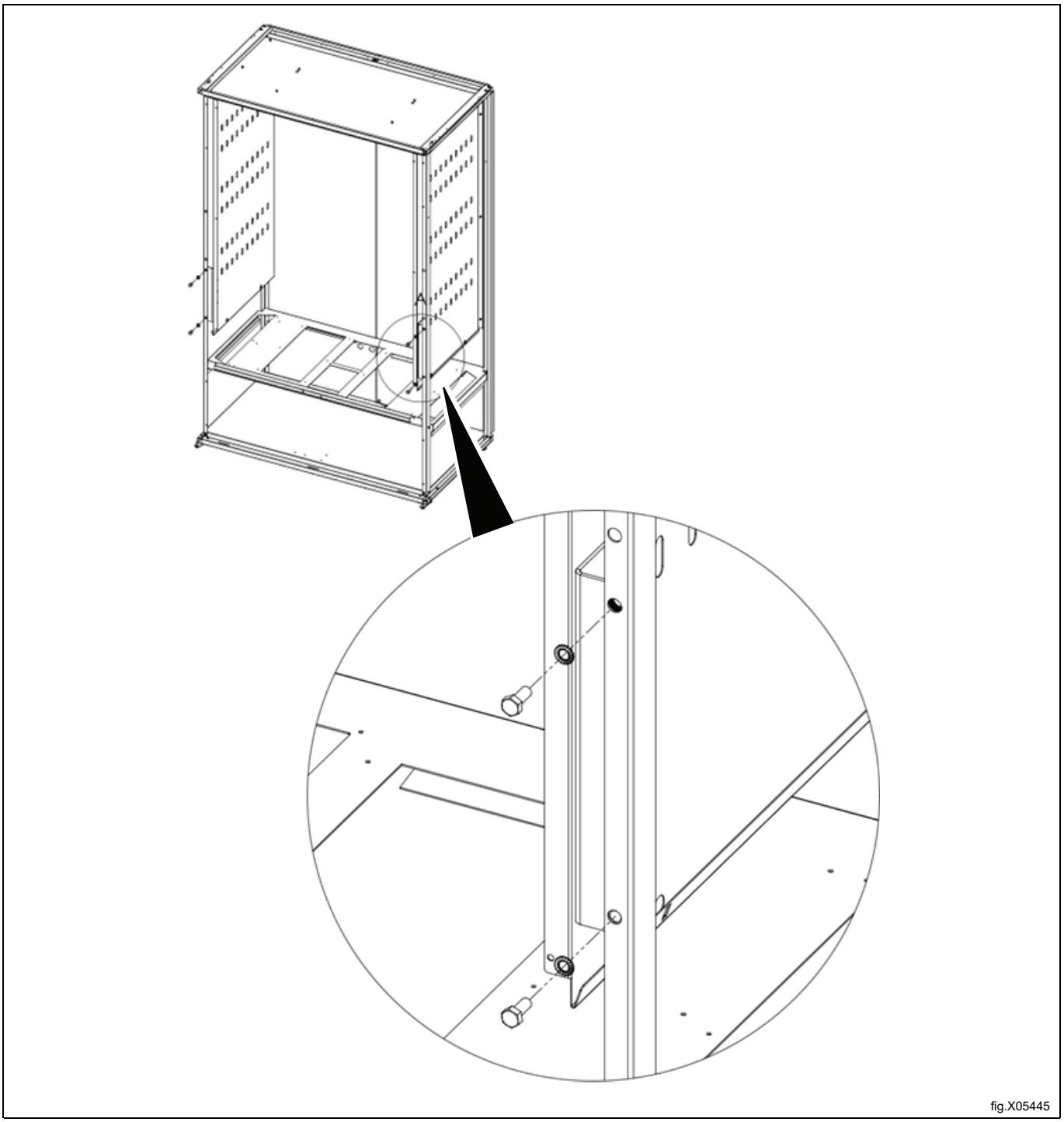

fig.X05445

5.12 Install insulating boards

Tip, use double-sided tape to keep the boards in place for easier installation of the sides.

- Insulating boards package 3. 2 pcs.

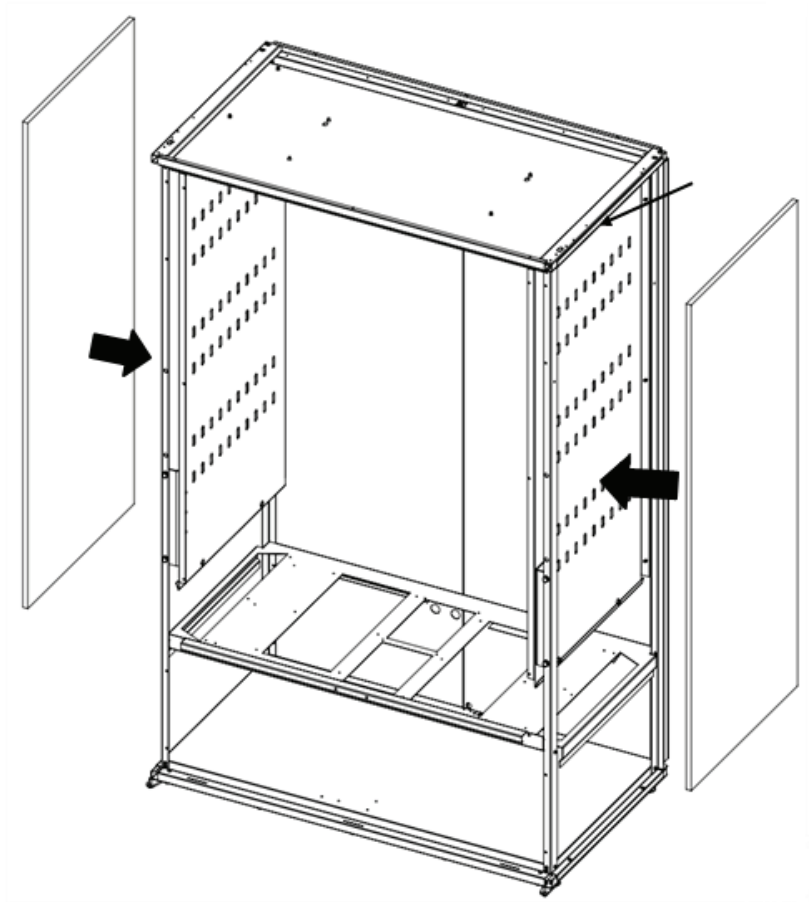

fig.X05446

5.13 Outer side installation

Start by inserting the side from the front.

- Sides from package 2. 2 pcs.
- Screws from bag 2. 26 pcs.

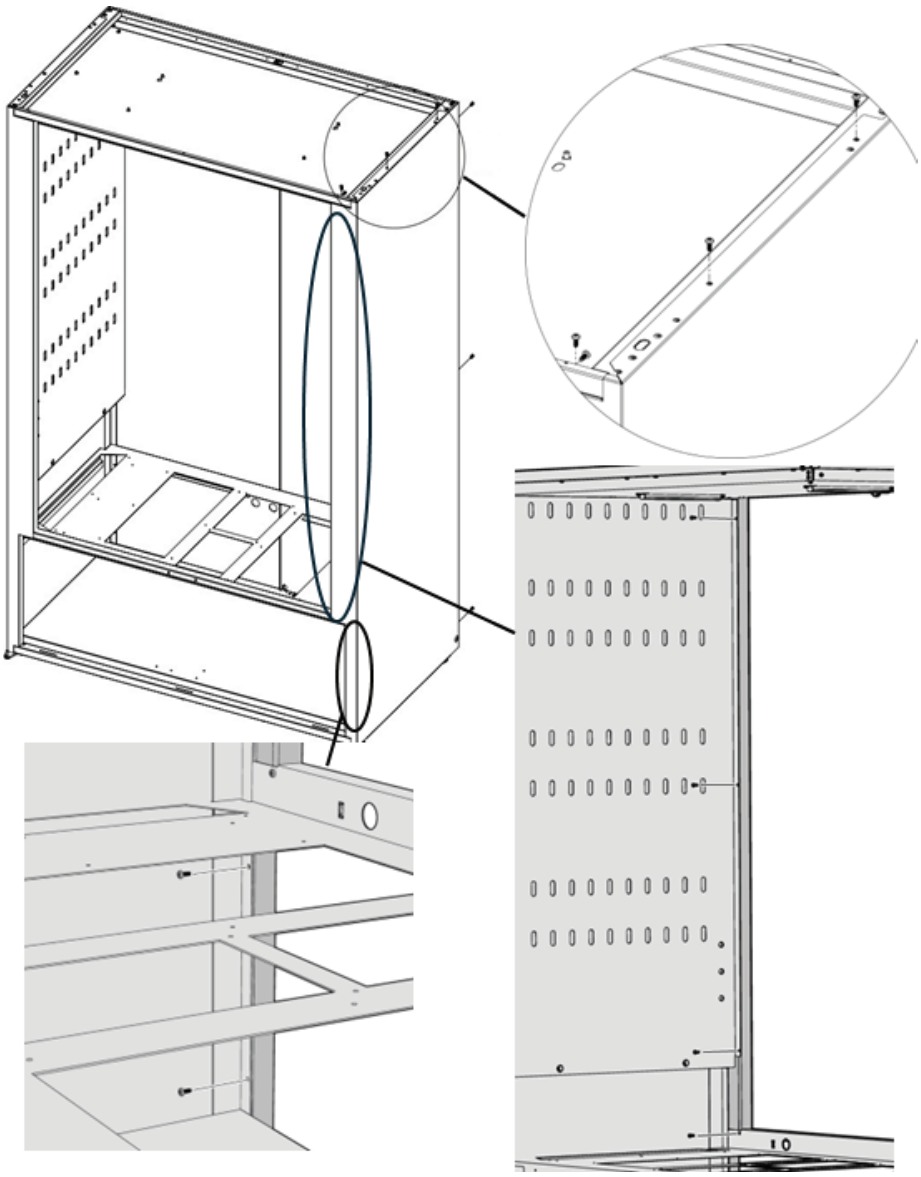

fig.X05447

5.14 Install outlet fittings

- Fittings from box 1. 2 pcs.

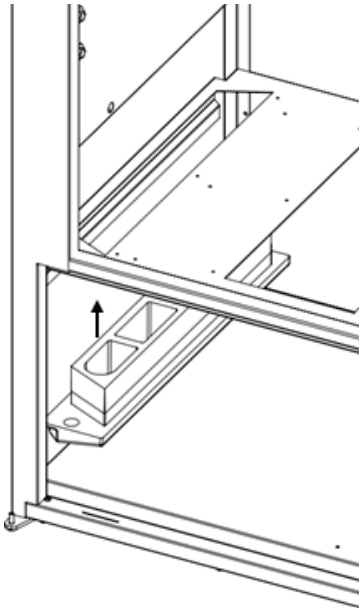

fig.X05448

5.15 Heat pump installation

Start by sliding the right-hand heat pump all the way in, then to the side until it stops.
Do the same with the left heat pump.

- 2 heat pumps from pallet.

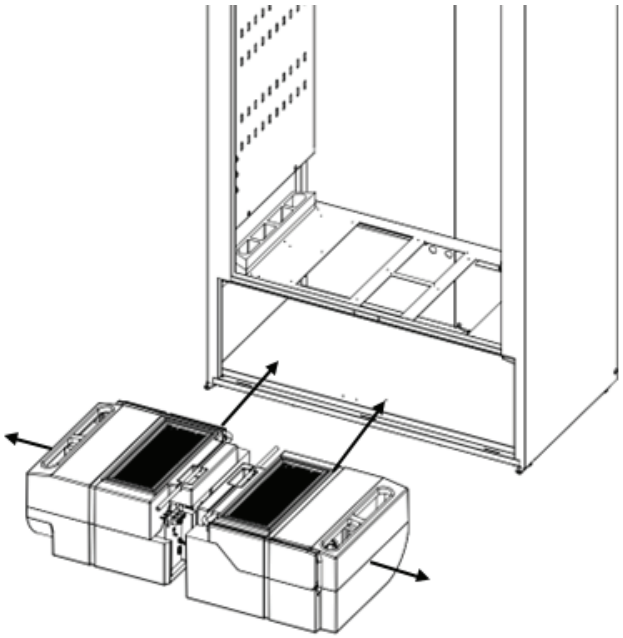

fig.X05449

5.16 Heat pump hoses

Connect the hoses with the T-piece. The hose from the master box needs to be adjusted in length. The hose that exits the back is in bag 3.

- T-piece in bag 5.
- Hose in bag 5.

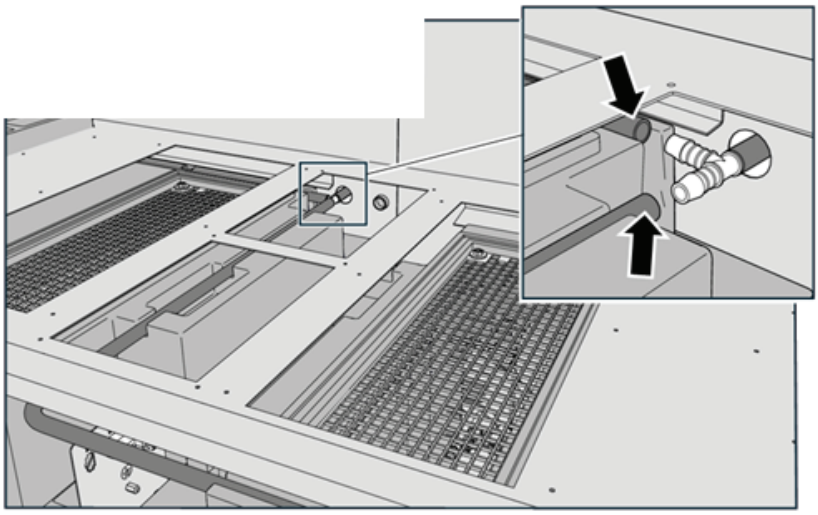

fig.X05450

5.17 Brackets for the heat pump boxes

- Bracket from bag 5. 2 pcs.
- Screws from bag 6. 4 pcs.

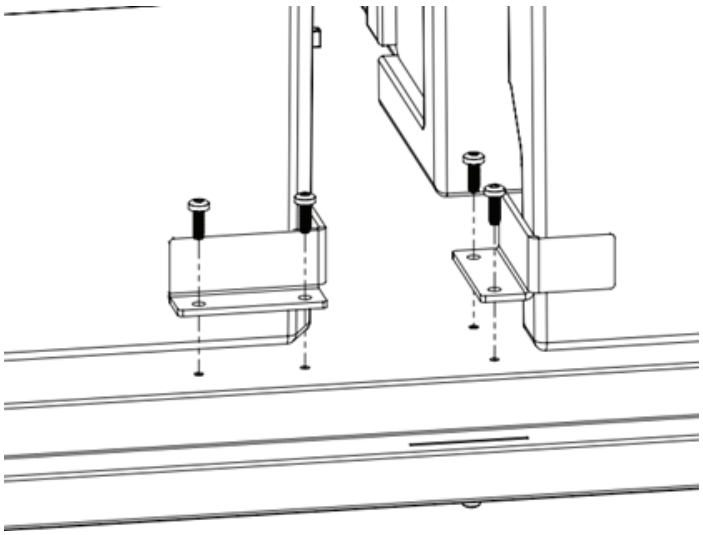

fig.X05451

5.18 Install hose on the rear panel

Install the hose according to the illustration, ensure that it exits the other side.

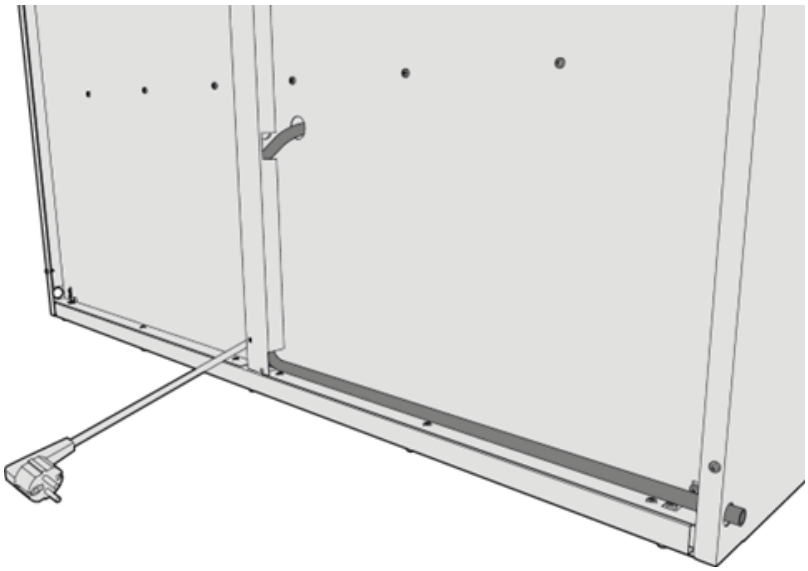

fig.X05453

5.19 Installation of the heat pump boxes

The left-hand heat pump, viewed from the front, is designated the master.

- 1 pc 0.5 m modular cable bag 3.

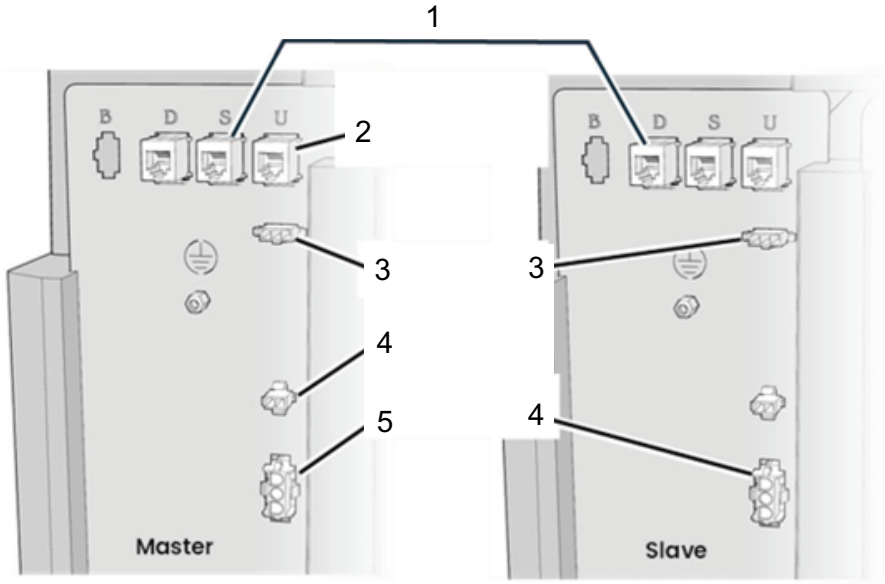

fig.X05454

1. Loose modular cable, black (S to D)
2. User interface White cable (U)
3. LED lighting
4. Door contact
5. Main connection

5.20 Install mounting plate outlet fitting

- Bracket for outlet fitting box 1. 2 pcs.
- Screws from bag 2. 6 pcs.

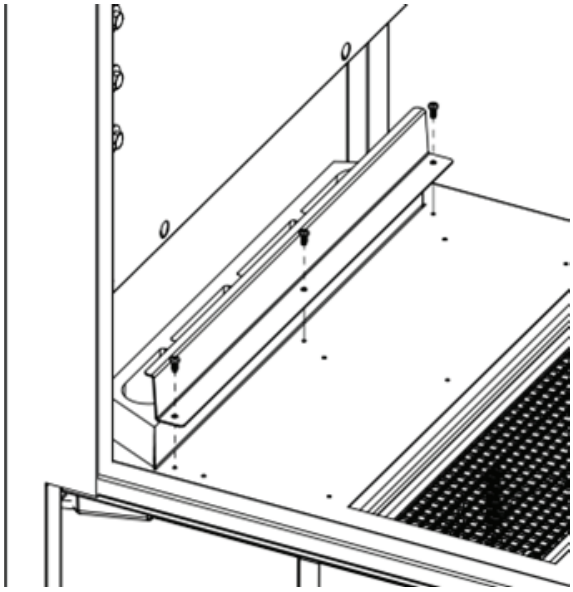

fig.X05455

5.21 Install filter and bracket

- Filter box 1. 2 pcs.
- Filter bracket box 1.4 pcs.
- Screws from bag 2.12 pcs.

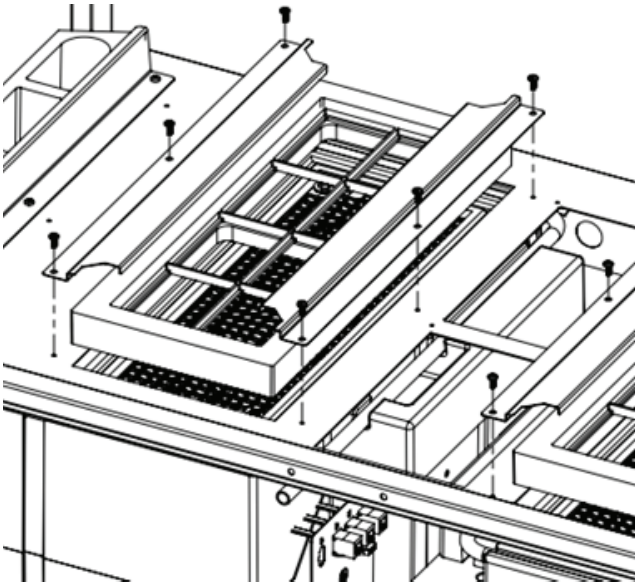

fig.X05456

5.22 Install cover plate

- Cover plate from box 1.
- Screws from bag 2. 6 pcs.

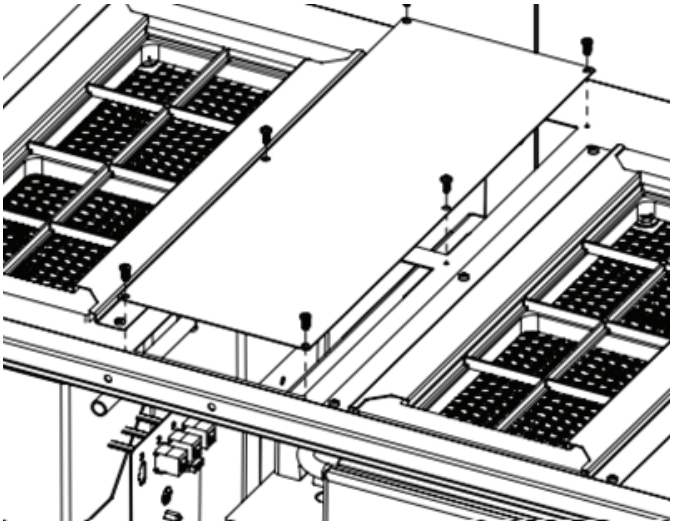

fig.X05457

5.23 Install side plates for air duct

The plates must be inside the air duct.

- Side plates box 1. 2 pcs.
- Screws from bag 2.6 pcs.
- Screws from bag 7.4 pcs.

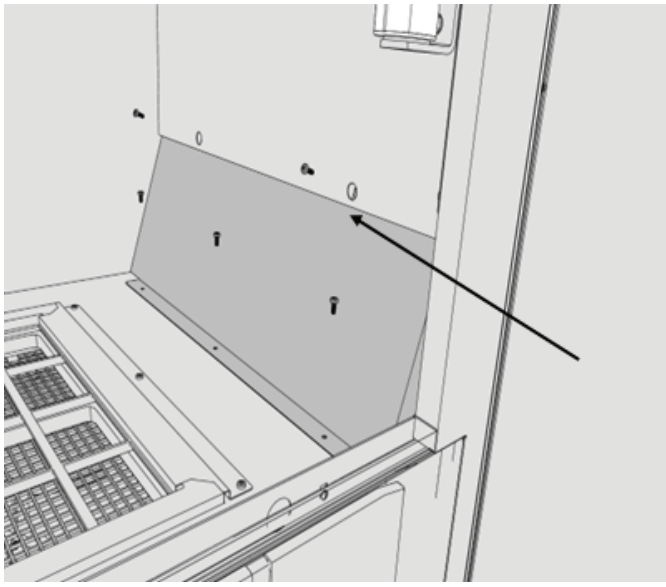

fig.X05458

5.24 Install door switches and front panel

- Front panel from box 3.
- Screws from bag 7. 2 pcs.
- Lock door switch bag 5. 2 pcs.
- Door switch bag 5. 2 pcs.
- Cables door switch bag 5.

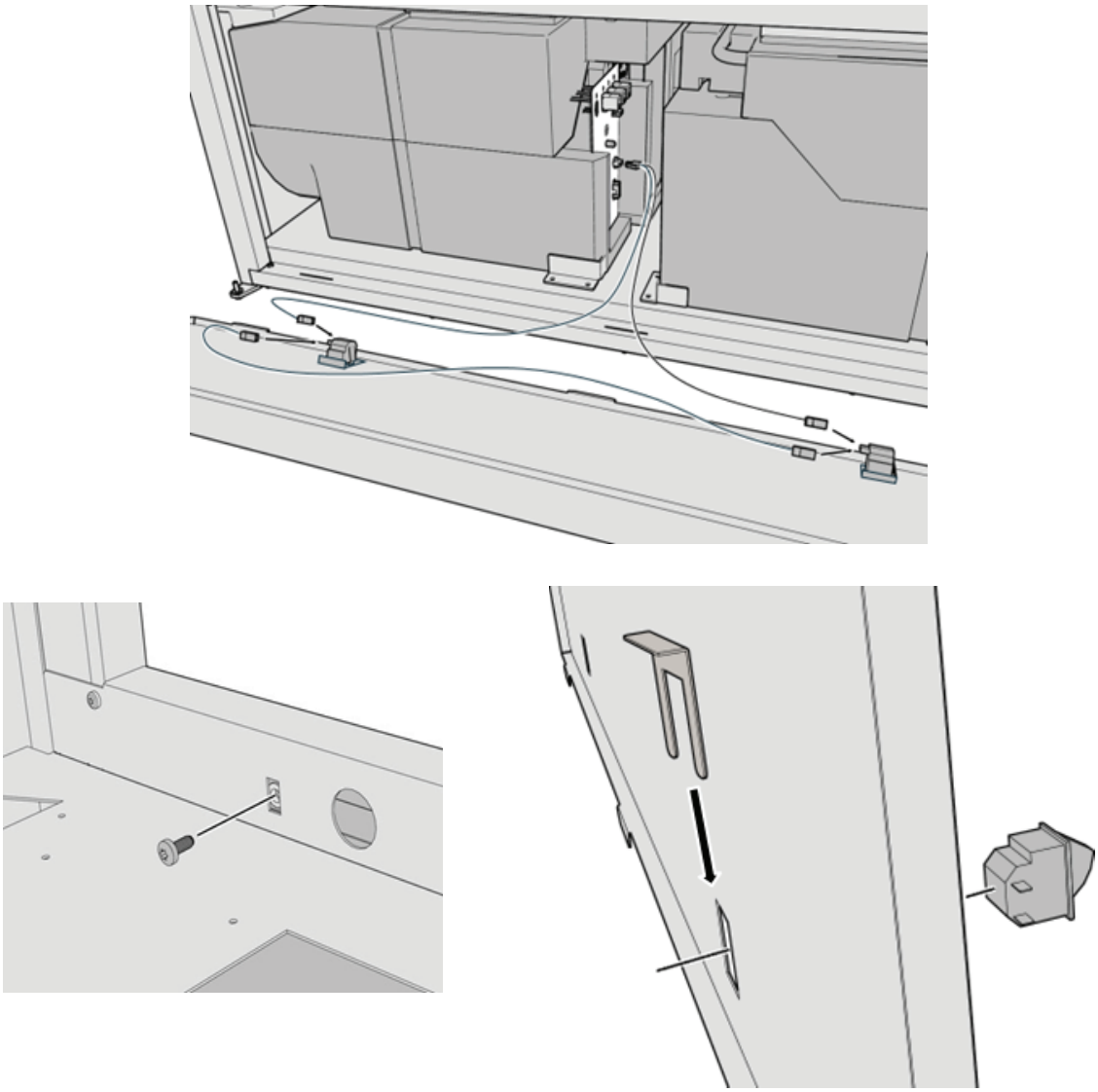

fig.X05459

5.25 Magnet installation

- Magnets bag 8. 4 pcs.
- Angle brackets bag 8. 2 pcs.
- Angle brackets bag 8. 2 pcs.

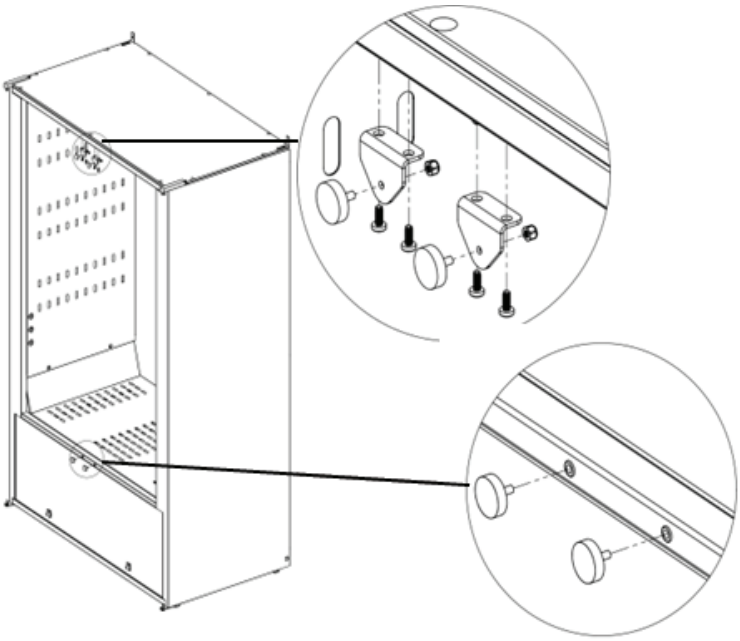

fig.X05460

5.26 Shoe rack installation

Position the shoe rack at the bottom of the drying cabinet.

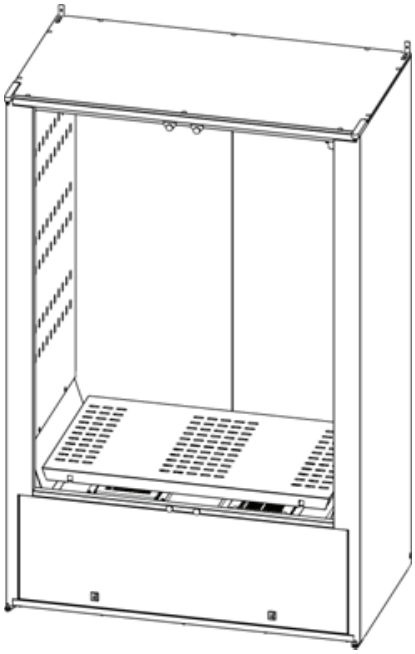

fig.X05461

5.27 Door installation

Place a washer on the door pin of the cabinet.

Install the right-hand door using the right-left hinge.

- Right door from box 3.
- Left door available box 3.
- Hinge bag 10. 2 pcs.
- Washers bag 10. 2 pcs
- Screws bag 2. 2 pcs.
- Screw bag 6. 4 pcs

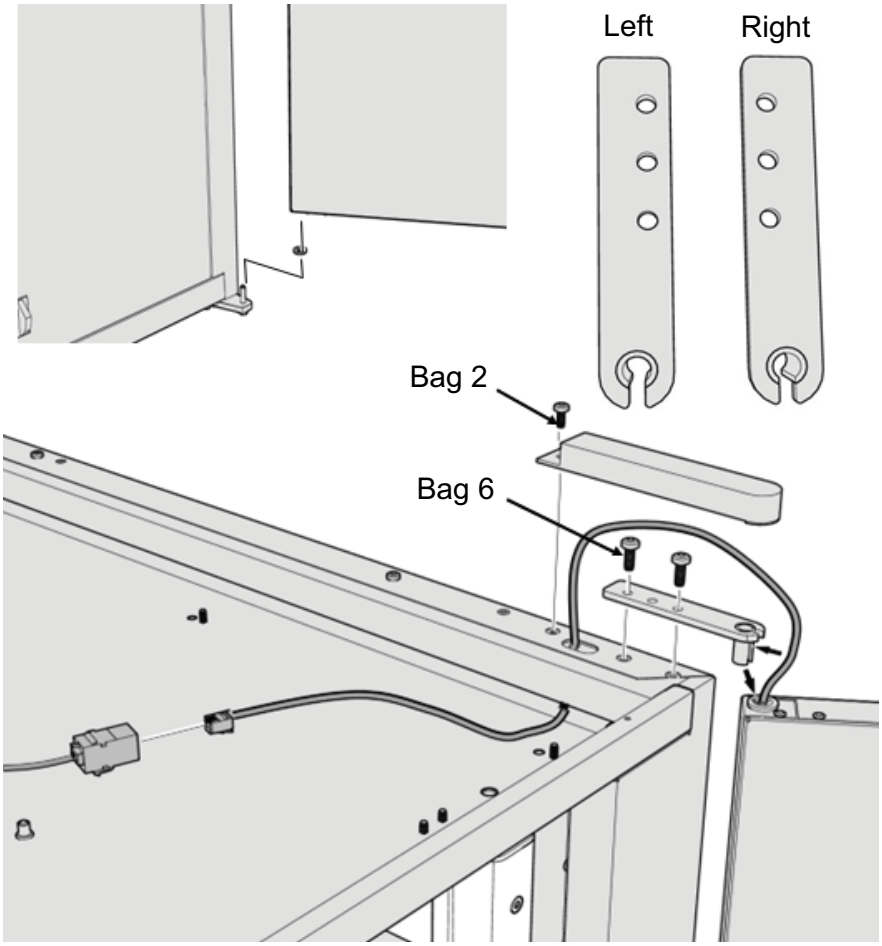

fig.X05462

5.28 Door handle installation

- Handles box 1.
- Screws handle bag box 1. 4 pcs.

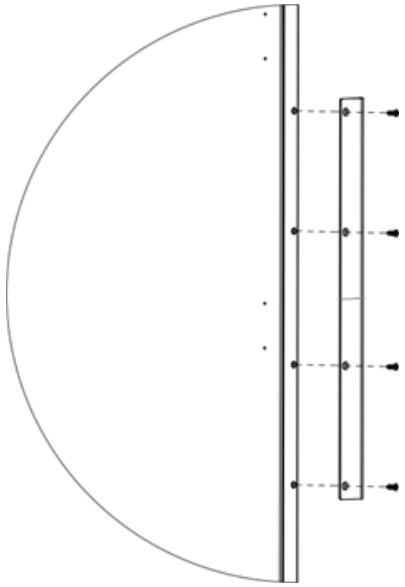

fig.X05463

5.29 Install hanger pin on the top panel

- Long hanger pin bag 4.
- Tooth washer bag 4.
- Screw bag 4.

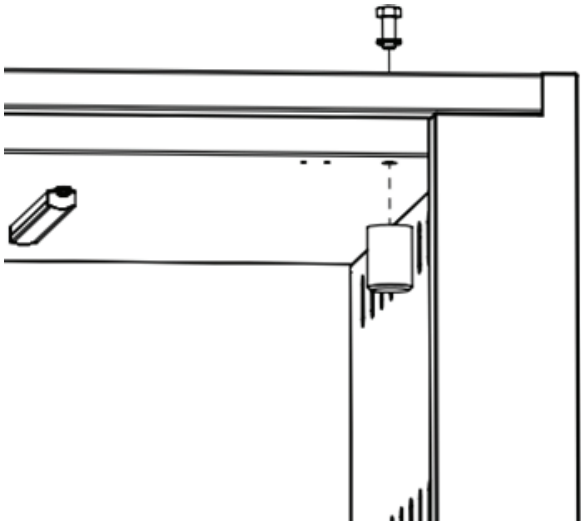

fig.X05464

5.30 Hanger bracket installation

Install screws and washers **on the opposite side** to where you want to place the hanger.

- Hanger angle brackets in bag 4.
- Screws in bag 4. 6 pcs.
- Washers in bag 4. 6 pcs.

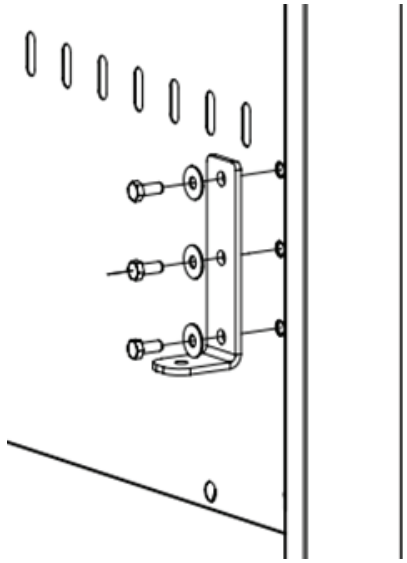

fig.X05465

- Hanger puck bag 4.
- Body washer bag 4.
- Tooth washer bag 4.
- Screw bag 4

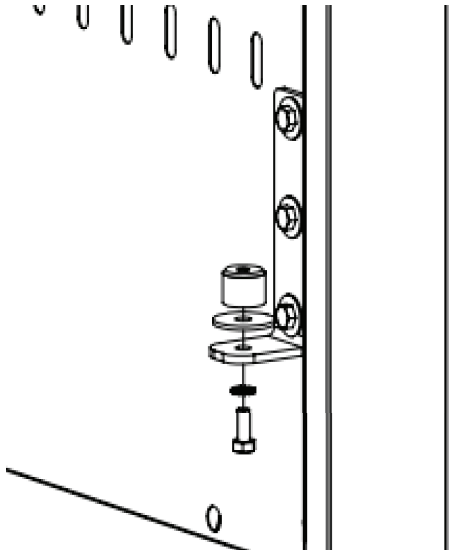

fig.X05465A

5.31 Hanger installation

Note!
Make sure to position correct hanger on the correct location.
Long distance to the first row of screws (A).
Short distance to the first row of screws (B).

- Hanger tube box 1.
- Hanger racks pallet. 4 pcs.
- Screw bag 9. 8 pcs.

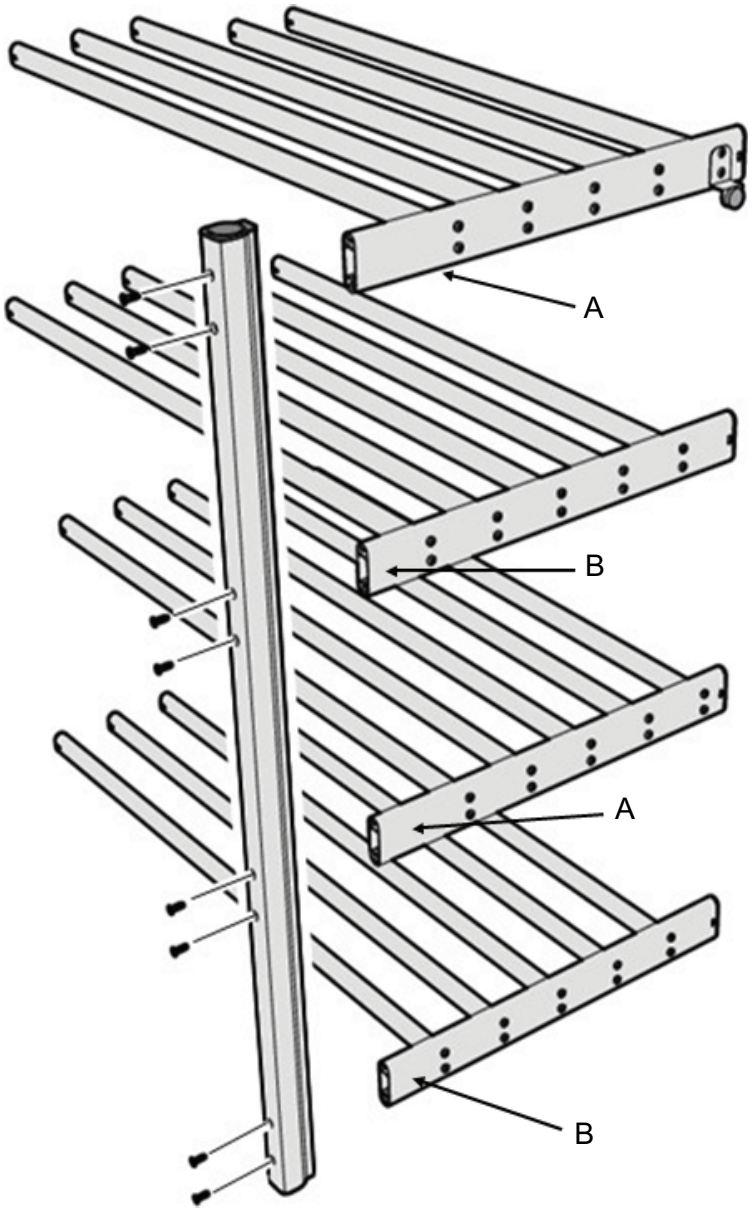

fig.X05466

Insert the hanger in the drying cabinet and fasten with the screws.

- Screw bag 2. 2 pcs.
- Stop hanger bag 4.

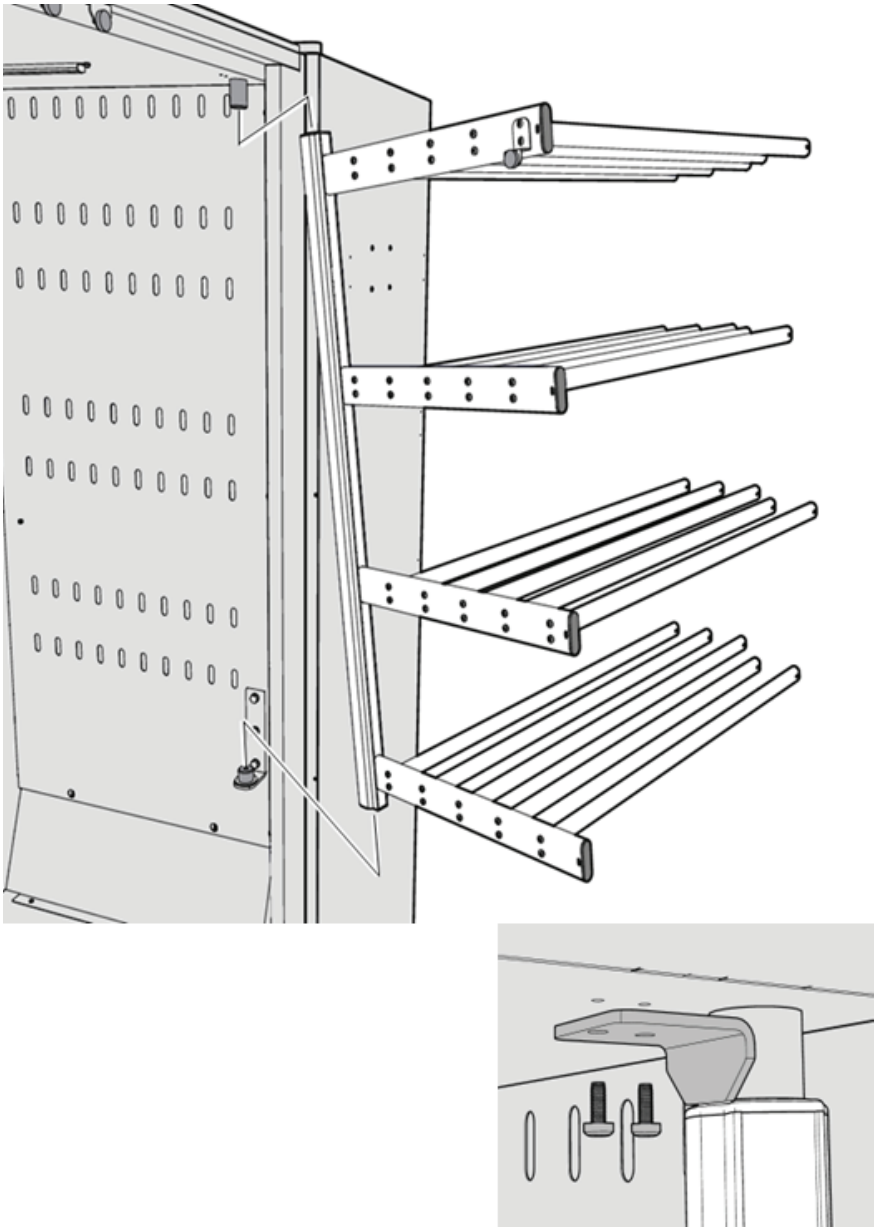

fig.X05467

5.32 Top panel installation

When the top panel is installed, cover all installed screws with plastic plugs.

- Top panel from box 3.
- Screws from bag 2. 10 pcs.
- Plastic plug bag 10. 10 pcs.

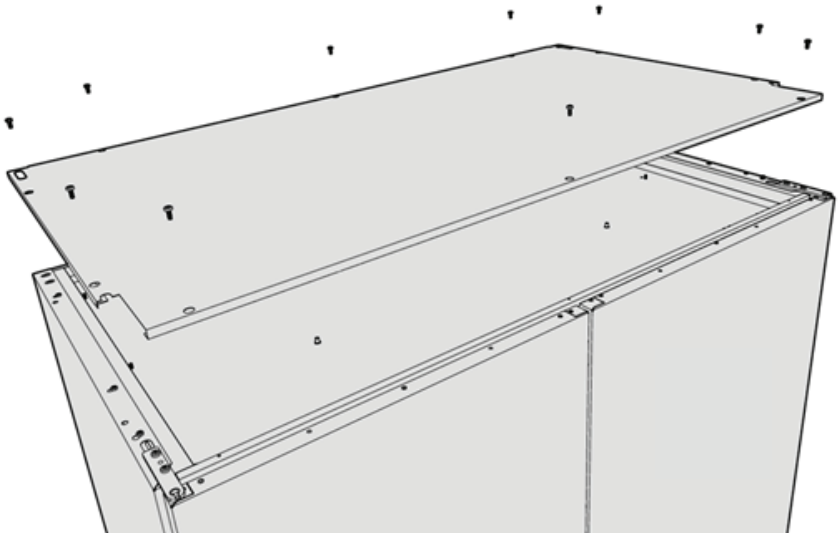

fig.X05468

6 Attachment to the wall

Warning

The drying cabinet must not be used without being screwed to the wall due to the risk of tipping.

Everything needed for wall mounting is included in the accessory bag.

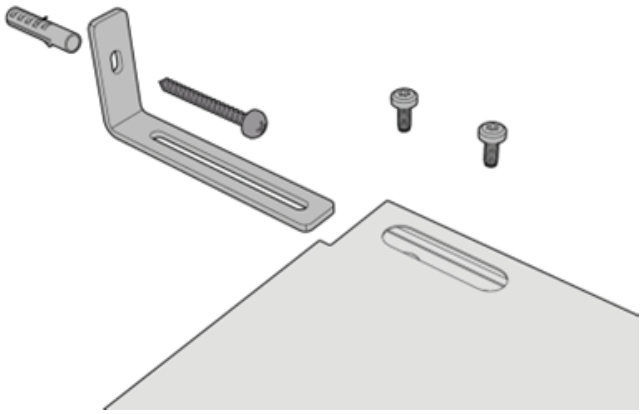

fig.X05469

7 Ventilating the room

When the machine is in operation, the room temperature increases. Due to this, the room must have sufficient ventilation.

All sources introducing heat into the same room requires to be considered when dimensioning the ventilation. Heat sources could for example be: more tumble dryers, drying cabinets, washers, ironers, radiators, etc. The combination of several sources for heat introduction leads to an increased need for ventilation flow. Other factors may also influence the needed ventilation flow, such as climate zone, building parameters, room size, etc. For assistance with dimensioning necessary ventilation needs, contact authorized ventilation technician.

8 Electrical connection

The electrical installation may only be performed by qualified personnel.
Electrical connection of the appliance must be done in accordance with electrical safety regulations.
We recommend that the mains cable be equipped with a ground fault interrupter.
The manufacturer disclaims all liability if the electrical connection is not done in the manner prescribed in this manual.

The drying cabinet is connected to 220 - 240 V, 1-phase, 50Hz and a protective earthed wall socket.

The drying cabinet is delivered ready for connection, with a cable and an earthed plug.

13 A fuse.

- The drying cabinet must be connected to an earthed wall socket using the supplied connection cable and must not be permanently connected.
- The power socket should be positioned so that the plug can be easily pulled out if necessary.
- The connection should constitute its own fuse group.
- Check that the connection current corresponds to the data on the type plate and that the main cable is properly earthed according to the applicable standard. We recommend that the main cable is fitted with an **earth leakage circuit breaker**.

8.1 Electrical connection of the Master and Slave dehumidification units

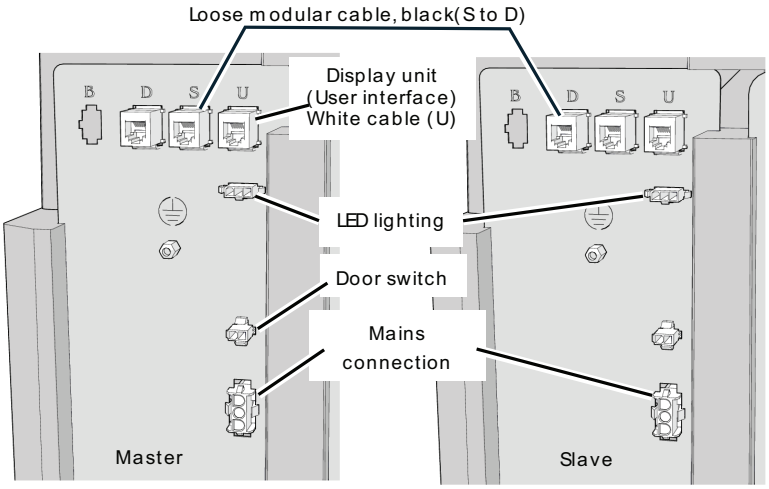

fig.X05576

9 Connection to floor drain

The drying cabinet is delivered from the factory with a pre-mounted hose on the left side, intended for connection to a floor drain.

Attach a new drain hose to one of the cabinet's connections and run it to a drain.

If the drain is higher than the outlet on the cabinet, make sure that the hose runs in an arc down towards the floor and forms a water trap. Otherwise, there is a risk that the condensation water will flow back to the box when the pump is not operating. This can cause the box to become filled with water and the cabinet to stop working.

Note!

Under no circumstances should the hose be bent in such a way as to restrict the flow of water.

If you need to transfer

the outlet of the condensation hose to the right side, carry out the following:

1. Cut the cable tie holding the hose.
2. Thread the hose back through the opening and out through the corresponding hole on the other side of the duct.
3. Move the hose to the right-hand outlet. Secure with a new cable tie.

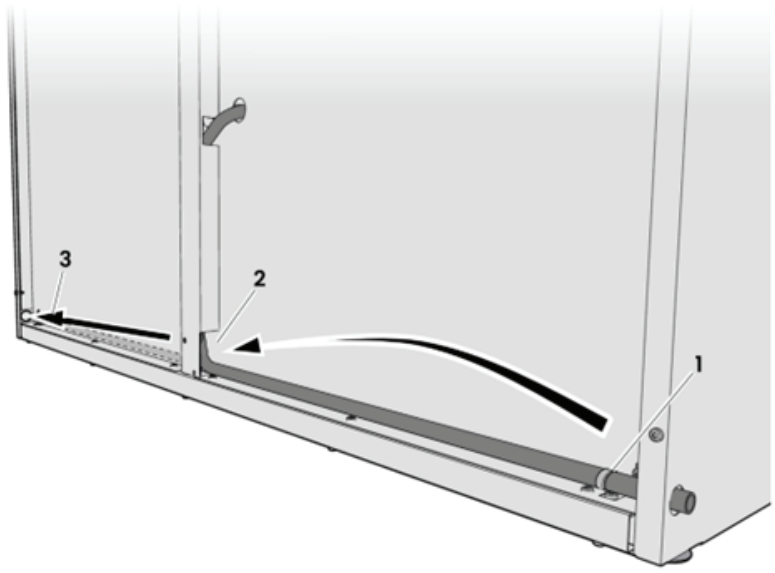

fig.X05575

10 Function check

May only be performed by qualified personnel.

A function check must be performed when the installation is finished and before the appliance can be used.
Whenever a repair has been made, a function check must be performed before the appliance can be used again.

- Select any program and check that the drying cabinet is heating and that there are no odd noises.

Ready for use

If all tests are OK the appliance is now ready for use.
If any of the tests fail, or deficiencies or faults are detected, please contact your local service organization or supplier.
Use a mild dish soap with hot water to wipe the inside and outside of the drying cabinet. Wipe thoroughly.

11 Disposal information

11.1 Appliance recyclability and disposal

11.1.1 Recyclability

Our appliances are manufactured using a significant percentage of recyclable metals (such as stainless steel, iron, aluminium, galvanized sheet, copper, etc.), which can be recovered through the local recycling systems, in compliance with the regulations in force in the country of use.

National regulations regarding waste disposal may vary. Disposal of the appliance must therefore be carried out in accordance with the applicable legislation and the directives issued by the competent authorities in the country where the appliance is decommissioned.

The components of the appliance must be separated and disposed of in accordance with their material composition (e.g. metals, oils, greases, plastics, rubber, refrigerant gases, insulating boards and other insulating material, glass wool, LEDs, etc.) and in full compliance with applicable local and international waste management regulations.

Compressors may contain oils and refrigerants fluids - are special waste and has to be recycled on local bases regulations.

11.1.2 Procedure regarding appliance disposal and component / material recovery

This product should not simply be disposed of in the environment at the end of its life cycle; it is imperative instead either to dispose of it in accordance with local environmental regulations, or, preferably, to deliver it whole to an authorized recycling center.

All removed components, including doors and other structural parts, must be delivered together with the appliance to an authorized recycling or dismantling facility.

The dismantling/recycling center will apply state of the art technologies and methods available to them to effectively disassemble the products for best recyclability.

Note that printed circuit boards, electrical motors or other components identified in European Union legislation to be of high critical raw materials recovery potential need to be addressed specifically.

In case of doubts or questions, always refer to your reference customer care service.

Before disposing of the appliance, carefully inspect its physical condition and preservation state, checking for potential leaks of liquids or gases, as well as for broken parts that may pose hazards during handling and subsequent dismantling.

	The symbol on the product indicates that this product should not be treated as domestic waste, but must be correctly disposed of in order to prevent any negative consequences for the environment and human health. For further information on the recycling of this product, contact the local dealer or agent, the customer care service or the local body responsible for waste disposal.

Note!
When dismantling the appliance, any marking, this manual and other documents concerning the appliance must be destroyed.

11.2 Disposal of packing

The packing must be disposed of in compliance with the current regulations in the country where the appliance is used. All the packing materials are environmentally friendly.

They can be safely kept, recycled or burned in an appropriate waste incineration plant. Recyclable plastic parts are marked as following examples.

PE	Polyethylene: • Outer wrapping • Instructions bag
PP	Polypropylene: • Straps
PS	Polystyrene foam: • Corner protectors

Electrolux Professional AB
341 80 Ljungby, Sweden
www.electroluxprofessional.com