Installation manual
Tumble dryer

TD6–17S
Compass Pro

Type N3...

Electrolux PROFESSIONAL

Original instructions

438917586/GB, IE
2026.10.26

Contents

1 Safety Precautions 5
1.1 Additional safety precautions for gas heated tumble dryer 7
1.2 General safety information 7
1.3 Commercial use only 7
1.4 Copyright 7
1.5 Symbols 8
2 Warranty terms and exclusions 9
3 Technical data 10
3.1 Drawing 10
3.2 Technical data 11
3.3 Connections 11
4 Setup 12
4.1 General 12
4.2 Unpacking 12
4.3 Recycling instruction for packaging 13
4.4 Siting 14
4.5 Connection to network 15
4.6 Mechanical installation 15
4.6.1 Securing the machine 16
4.6.2 Connection branch 17
5 Evacuation system 18
5.1 Air principle 18
5.2 Fresh air 18
5.3 Exhaust duct 19
5.4 Shared exhaust duct 20
5.5 Exhaust dimensioning 20
5.6 Adjusting the air flow 21
6 Gas connection 24
6.1 Fasten the label 24
6.2 General 24
6.3 Gas installation 25
6.4 Table of pressure and adjustment 26
6.5 Test run 27
6.6 Converting instructions 28
6.7 Data label 30
7 Electrical connection 31
7.1 Electrical installation 31
7.2 Single-phase connection 32
7.3 Three-phase connection 33
7.4 Electrical connections 34
7.5 Functions for I/O-cards 35
7.5.1 Central payment (2J) 35
7.5.2 Central payment (2J) 36
7.5.3 External coin meter/Central payment (2K) 37
7.5.4 Price reduction (2K) 38
7.6 Mounting the switches 38
7.7 Mounting the connectivity connectors (only valid from machine No. 3482009901–) 40
8 At first power up 42
8.1 Select language 42
8.2 Set time and date 42
8.3 Activate/Deactivate the service alarm 42
9 Function check 43
10 Disposal information 45
10.1 Appliance recyclability and disposal 45
10.1.1 Recyclability 45
10.1.2 Procedure regarding appliance disposal and component / material recovery 45
10.2 Disposal of packing 45

The manufacturer reserves the right to make changes to design and component specifications.

1 Safety Precautions

- Servicing shall be carried out only by authorized personnel.
- Only authorized spare parts, accessories and consumables shall be used.
- The machine is not to be used if industrial chemicals have been used for cleaning.
- Do not dry unwashed items in the machine.
- WARNING: Items that have been soiled with substances such as hair care products, cooking oil, acetone, alcohol, petrol, kerosene, spot removers, turpentine, waxes and wax removers shall be cleaned sufficiently to remove the contaminant before being tumble dried. When washing such soiled items ensure the use of detergent as specified by the detergent manufacturer and select the highest suitable temperature. If in doubt, wash the items several times.
- Items such as foam rubber (latex foam), shower caps, waterproof textiles, rubber backed articles and clothes or pillows fitted with foam rubber pads should not be dried in the machine.
- Fabric softeners or similar products should be used as specified by the fabric softener instructions.
- The final part of a drying cycle occurs without heat (cool down cycle) to ensure that the items are left at a temperature that ensures that the items will not be damaged.
- Remove all objects from pockets such as lighters and matches.
- WARNING. Never stop the machine before the end of the drying cycle unless all items are quickly removed and spread out so that the heat is dissipated.
- Adequate ventilation has to be provided to avoid the back flow of gases into the room for appliances burning other fuels, including open fires.
- Exhaust air must not be discharged into a flue which is used for exhausting fumes from appliances burning gas or other fuels.
- The machine must not be installed behind a lockable door, a sliding door or a door with a hinge on the opposite side to that of the machine in such a way that a full opening of the machine is restricted.
- If the machine has a lint trap this has to be cleaned frequently.
- The lint must not be accumulated around the machine.
- DO NOT MODIFY THIS APPLIANCE.
- When performing service or replacing parts, the power must be disconnected.
- When the power is disconnected, the operator must see that the machine is disconnected (that the plug is removed and remains removed) from any point to which he has access. If this is not possible, due to the construction or installation of the machine, a disconnection with a locking system in the isolated position shall be provided.
- In accordance with the wiring rules: mount a multi-pole switch prior to the machine to facilitate installation and service operations.
- Stationary appliances not fitted with means for disconnection from the supply mains having a contact separation in all poles that provide full disconnection under overvoltage category III, means for disconnection must be incorporated in the fixed wiring in accordance with the wiring rules.
- WARNING: The appliance must not be supplied through an external switching device, such as a timer, or connected to a circuit that is regularly switched on and off by a utility.

- If different rated voltages or different rated frequencies (separated by a /) are stated at the machine data plate, instructions for adjusting the appliance for operation at the required rated voltage or rated frequency are stated in the installation manual.
- The openings in the base, shall not be obstructed by a carpet.
- Oil-affected items can ignite spontaneously, especially when exposed to heat sources such as in a tumble dryer. The items become warm, causing an oxidation reaction in the oil. Oxidation creates heat. If the heat cannot escape, the items can become hot enough to catch fire. Piling, stacking or storing oil-affected items can prevent heat from escaping and so create a fire hazard.
- Maximum mass of dry cloth: 2 x 16.7 kg.
- A-weighted emission sound pressure level at working stations: 70 dB(A).
- Additional requirements for the following countries; AT, BE, BG, HR, CY, CZ, DK, EE, FI, FR, DE, GR, HU, IS, IE, IT, LV, LT, LU, MT, NL, NO, PL, PT, RO, SK, SI, ES, SE, CH, TR, UK:
  - The appliance can be used in public areas.
  - This appliance can be used by children aged from 8 years and above and persons with reduced physical, sensory or mental capabilities or lack of experience and knowledge if they have been given supervision or instruction concerning use of the appliance in a safe way and understand the hazards involved. Children shall not play with the appliance. Cleaning and user maintenance shall not be made by children without supervision.
  - Children of less than 3 years should be kept away unless continuously supervised.
- Additional requirements for other countries:
  - This appliance is not intended for use by persons (including children) with reduced physical, sensory or mental capabilities, or lack of experience and knowledge, unless they have been given supervision or instruction concerning use of the appliance by a person responsible for their safety. Children should be supervised to ensure that they do not play with the appliance.

1.1 Additional safety precautions for gas heated tumble dryer

- Before installation, check that the local distribution conditions, nature of gas and pressure and the adjustment of the appliance are compatible.
- The machine is not to be installed in rooms containing cleaning machines with perchloroethylene, TRICHLOROETHYLENE or CHLOROFLUOROCONTAINING HYDROCARBONS as cleaning agents.
- NOTE: it is pointed out that the connection and commissioning of appliances complying with this standard are subject to observance of the installation regulations in force in the countries where these appliances are marketed.
- Connection to the appliance shall be made with a flexible hose suitable for the appliance category in accordance with national installation regulations of the country of destination and that in case of doubt the installer shall contact the supplier.
- The appliance should be installed on non-flammable materials for the floor, worktop and/or wall close to the appliance if required.
- If you can smell gas:
  - Do not switch on any equipment
  - Do not use electrical switches
  - Do not use telephones in the building
  - Evacuate the room, building or area
  - Contact the person responsible for the machine

1.2 General safety information

In order to prevent damage to the electronics (and other parts) that may occur as the result of condensation, the machine should be placed in room temperature for 24 hours before being used for the first time.

1.3 Commercial use only

The machine/machines covered by this manual is/are made for commercial and industrial use only.

1.4 Copyright

This manual is intended solely for consultation by the operator and can only be given to third parties with the permission of Electrolux Professional AB.

1.5 Symbols

	Caution
	Caution, hot surface
	Caution, high voltage
	Warning, risk of fire / flammable material
	Danger, crush hazard
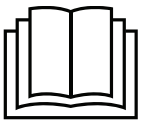	Read the instructions before using the machine

2 Warranty terms and exclusions

If the purchase of this product includes warranty coverage, warranty is provided in line with local regulations and subject to the product being installed and used for the purposes as designed, and as described within the appropriate equipment documentation.

Warranty will be applicable where the customer has used only genuine spare parts and has performed maintenance in accordance with Electrolux Professional AB user and maintenance documentation made available in paper or electronic format.

Electrolux Professional AB strongly recommends using Electrolux Professional AB approved cleaning, rinse and descaling agents to obtain optimal results and maintain product efficiency over time.

The Electrolux Professional AB warranty does not cover:

- service trips cost to deliver and pick up the product;
- installation;
- training on how to use/operate;
- replacement (and/or supply) of wear and tear parts unless resulting from defects in materials or workmanship reported within one (1) week from the failure;
- correction of external wiring;
- correction of unauthorized repairs as well as any damages, failures and inefficiencies caused by and/or resulting from;
  - insufficient and/or abnormal capacity of the electrical systems (current/voltage/frequency, including spikes and/or outages);
  - inadequate or interrupted water supply, steam, air, gas (including impurities and/or other that does not comply with the technical requirements for each appliance);
  - plumbing parts, components or consumable cleaning products that are not approved by the manufacturer;
  - customer’s negligence, misuse, abuse and/or non-compliance with the use and care instructions detailed within the appropriate equipment documentation;
  - improper or poor: installation, repair, maintenance (including tampering, modifications and repairs carried out by third parties not authorized third parties) and modification of safety systems;
  - Use of non-original components (e.g.: consumables, wear and tear, or spare parts);
  - environment conditions provoking thermal (e.g. overheating/freezing) or chemical (e.g. corrosion/oxidation) stress;
  - foreign objects placed in- or connected to- the product;
  - accidents or force majeure;
  - transportation and handling, including scratches, dents, chips, and/or other damage to the finish of the product, unless such damage results from defects in materials or workmanship and is reported within one (1) week of delivery unless otherwise agreed;
- product with original serial numbers that have been removed, altered or cannot be readily determined;
- replacement of light bulbs, filters or any consumable parts;
- any accessories and software not approved or specified by Electrolux Professional AB.

Warranty does not include scheduled maintenance activities (including the parts required for it) or the supply of cleaning agents unless specifically covered within any local agreement, subject to local terms and conditions.

Check on Electrolux Professional AB website the list of authorized customer care.

3 Technical data

3.1 Drawing

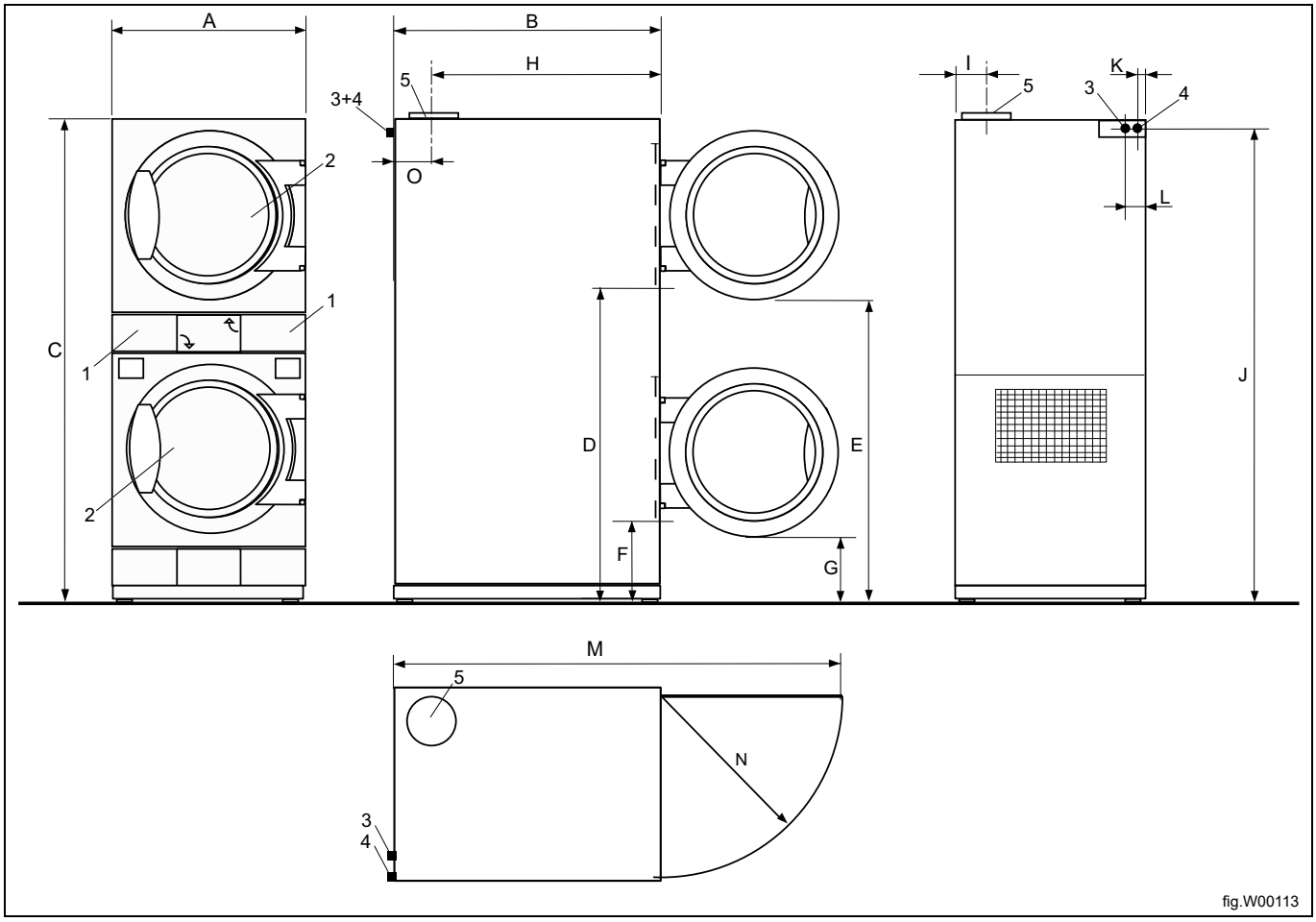

1	Operating panel
2	Door opening, ⌀ 580 mm
3	Electrical connection
4	Gas connection
5	Exhaust connection

	A	B	C	D	E
mm	790	1115	1940	1270	1210

	F	G	H	I	J
mm	320	260	905	140	1930

	K	L	M	N	O
mm	30	105	1840	740	210

3.2 Technical data

Weight, net	kg	289
Drum volume	litres	2 x 300
Drum diameter	mm	760
Drum depth	mm	660
Drum speed, medium load	rpm	45
Rated capacity, filling factor 1:18 (Max. load)	kg	16.6
Rated capacity, filling factor 1:22 (Recommended load)	kg	13.6
Heating: Electricity	kW	2 x 9
	kW	2 x 13.5
	kW	2 x 18
Heating: Gas	kW	2 x 21
Air consumption, Electric heating, 9 kW	m^3/h	2 x 600
Air consumption, Electric heating, 13.5 kW	m^3/h	2 x 600
Air consumption, Electric heating, 18 kW	m^3/h	2 x 600
Air consumption, Gas heating	m^3/h	2 x 600
Maximum static back pressure, Electric 50 Hz / 60 Hz**	Pa	400
Maximum static back pressure, Gas 50 Hz / 60 Hz**	Pa	400
Sound power/pressure level at drying*	dB(A)	76/60
Heat emission of installed power, max	%	15

* Sound power levels measured according to ISO 60704.

** Static back pressure value measured in NTC position of bottom pocket only, in cold empty machine and running a program with no heat on both pockets at the same time.

Note!

- **The default gas appliances are built to run on natural gas (GNH) according to 2H or 2E (G20).**
- **The default gas appliance shall not be installed at an altitude above 610 m (2001 ft).**
- **To run on another gas type gas converting must be done on the machine.**
- **The gas converting accessories for other gases at altitudes below 610 m (2001 ft) are in the accessory bag.**
- **For LPG use gas qualities according to GPA Midstream Standard 2140-23.**

3.3 Connections

Air outlet	⌀ mm	200
Gas connection	1/2”	ISO 7/1–R1/2

4 Setup

4.1 General

The principle work flow to setup or install this machine is as follows:

1. Unpacking
2. Positioning/siting, levelling or/and securing the machine.
3. Correcting the fresh air/air intake's size, exhaust duct's size and pipe(s) connections in considering a stand-alone machine or sharing exhaust duct.
4. Electric connections, connect the power supply to the machine.
5. Air flow or static back pressure adjustments in a cold empty machine in considering a stand-alone machine or sharing exhaust duct.
6. Gas connection. (For gas heated machine).
7. Function check.
8. Option functions check.

More details are described in each part of this installation manual.

4.2 Unpacking

Note!

Two persons are recommended for the unpacking.

Remove the bolts between the machine and pallet. There are two bolts in the front of the machine and two in the back of the machine. Open the filter door and remove the two bolts in the front of the machine. Remove the lower rear panel and remove the bolts in the back of the machine.

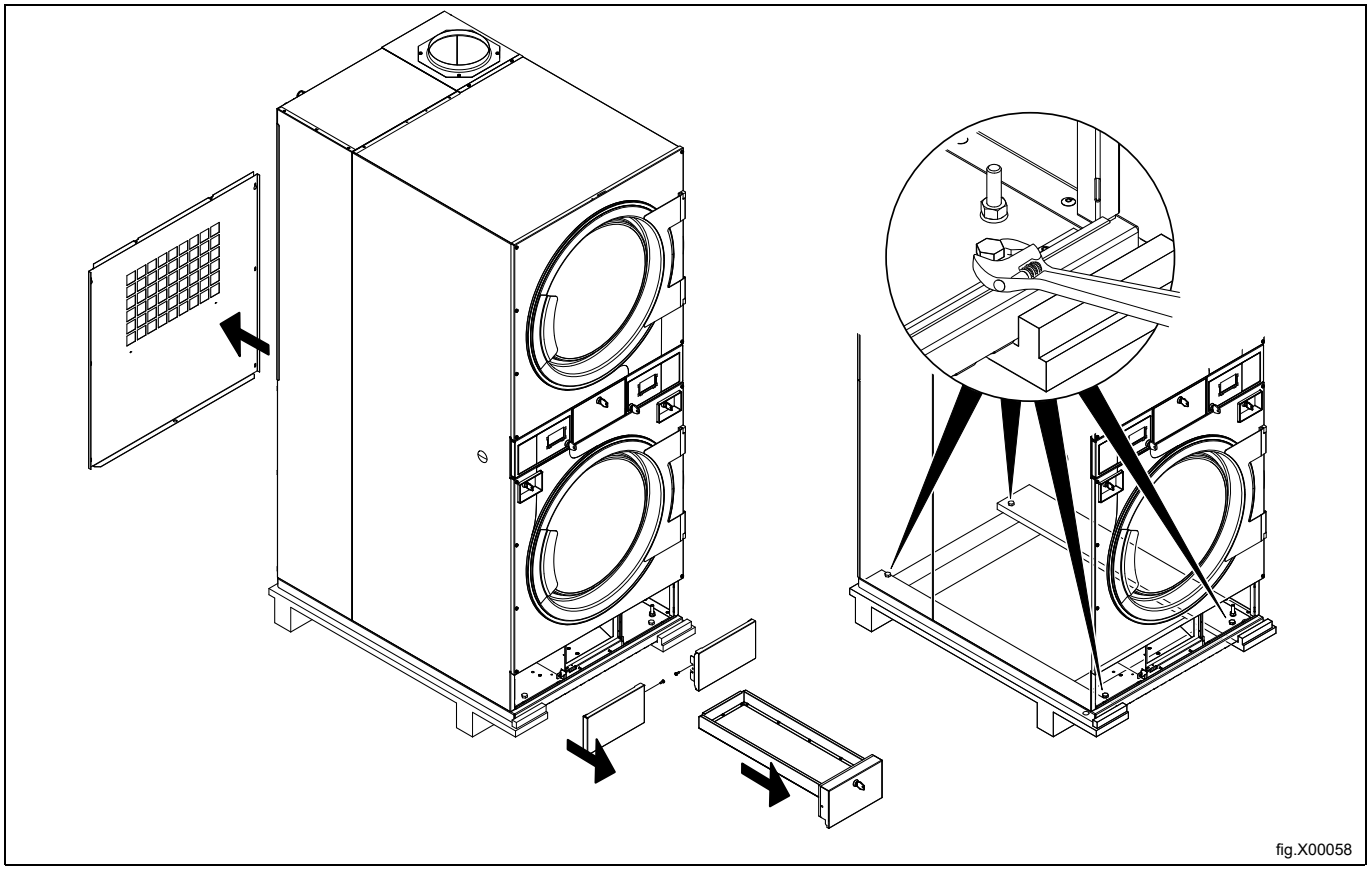

Remove the machine from the pallet.

Note!

When moving the machine, handle it with care. The drum has no transport clamps.

Place the machine on its final position.

4.3 Recycling instruction for packaging

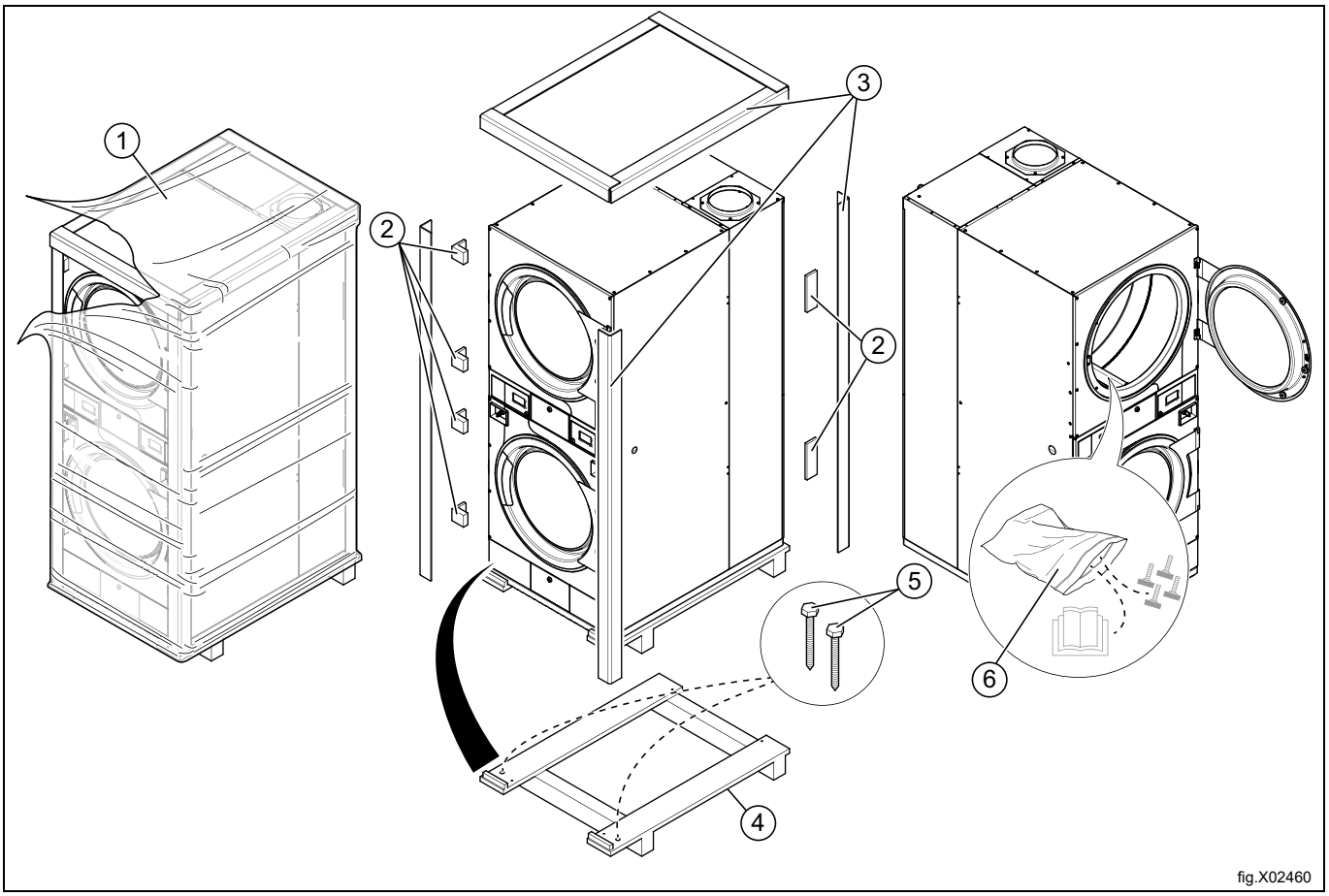

Fig.	Description	Code	Type
1	Wrapping film	LDPE 4	Plastics
2	Corner protection	PS 6	Plastics
3	Cardboard packaging	PAP 20	Paper
4	Pallet	FOR 50	Wood
5	Screw	FE 40	Steel
6	Plastic bag	PET 1	Plastics

4.4 Siting

The figure shows recommended distance to walls and/or other machines.

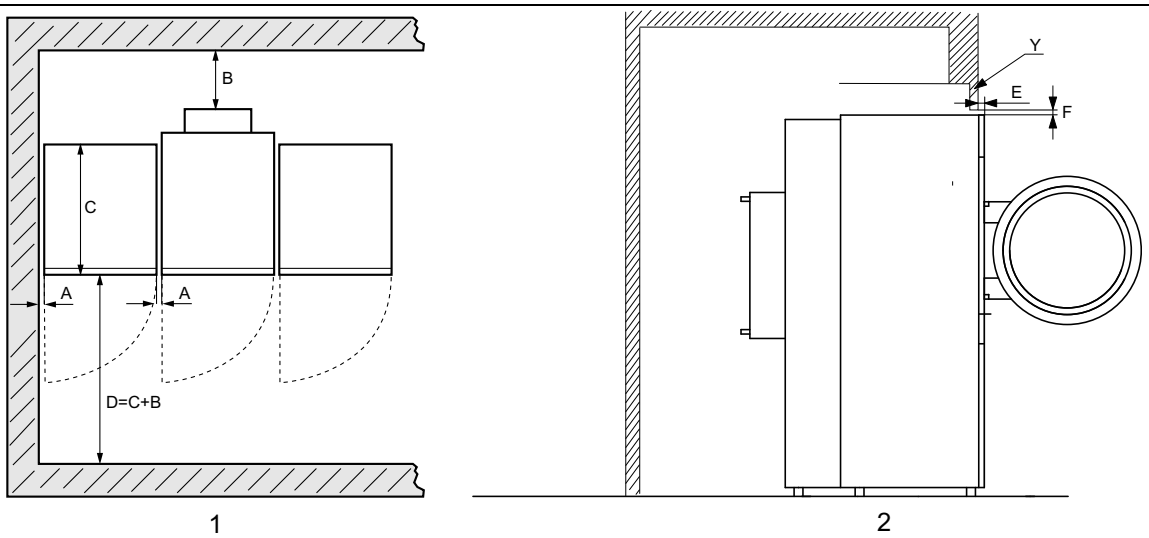

1= Top view
2 = Side view on built in machine
Y = For built-in machines it is recommended that the wall section Y is a removable finish piece. If so, E and F can be 0.

fig.X00959A

A	5–500 mm (Min. 0 mm, the units may be installed against one another)
B	500 mm (Min. 200 mm)
C	Depth of machine
D	D = C + B (Min. 1220 mm to be able to use the machine)
E	Min. 20 mm
F	Min. 25.4 mm (The overhead soffit may be used to close the gap above the machine. Min. required clearance: 0 mm)

Note!

The machine should be positioned so that there will be enough space for working, both for the user and service personnel.

Respecting the given recommendations will provide easy access for maintenance and service operations.

In case of space limitations, it is possible to install machines without respecting to the given recommendations. If so, keep in mind that it might be necessary to disconnect and move other machines to be able to reach and perform service on affected machine.

4.5 Connection to network

If several machines are to be connected to a network, the knock-outs (A) in the side panels must be removed before installation.

A bushing for network cables must be installed from the inside in the right-hand side panel. The bushing must be pushed right through the hole in the left-hand side panel on the side of the machine.

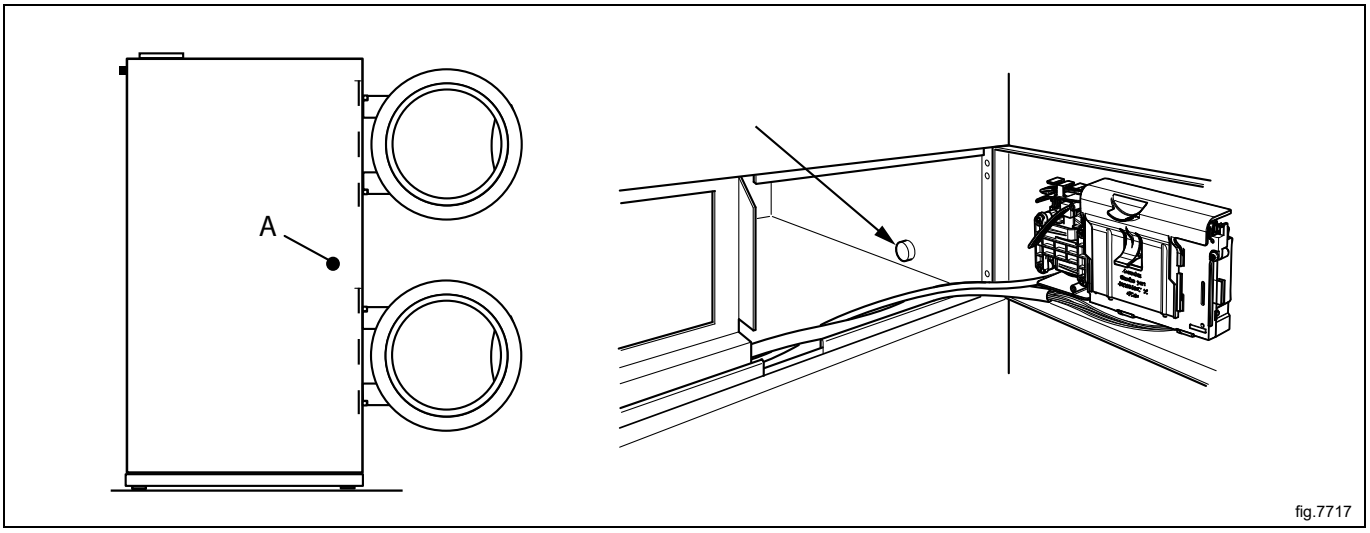

fig.7717

4.6 Mechanical installation

Level the machine with the feet of the machine. The maximum height adjustment of the feet is 15 mm.

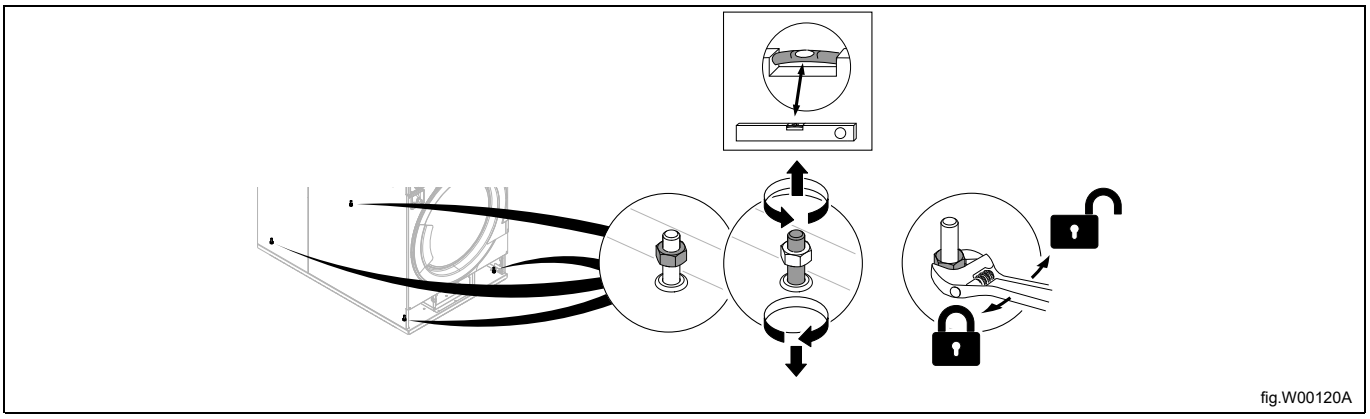

fig.W00120A

Remount the lower cover plates.

4.6.1 Securing the machine

To ensure steadiness of the machine it is important to fasten the machine to the foundation.

Fasten the four fittings (A) to the foundation using four x M10 set screws (B). If the four fittings are not supplied, order kit No. 487193544.

Fasten the machine to the fittings.

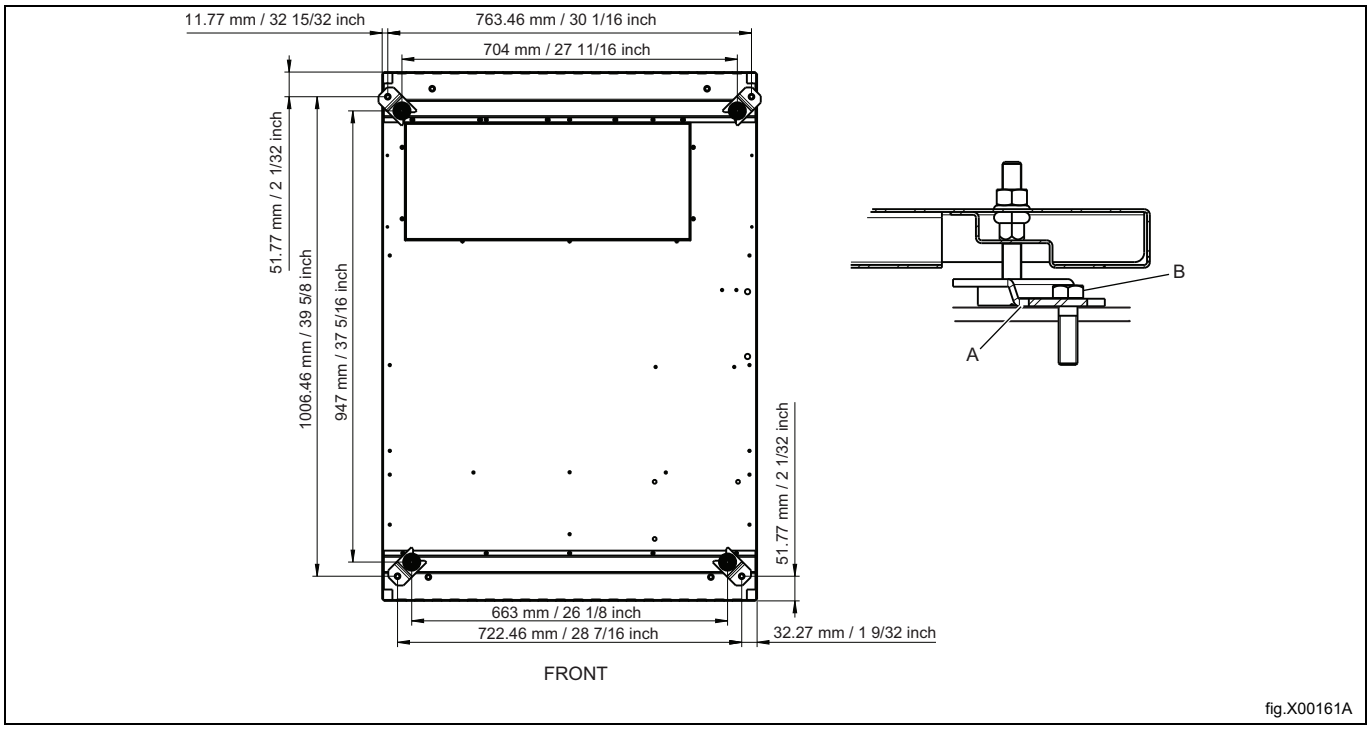

4.6.2 Connection branch

Mount the enclosed branch at the top of the exhaust plenum with four screws.

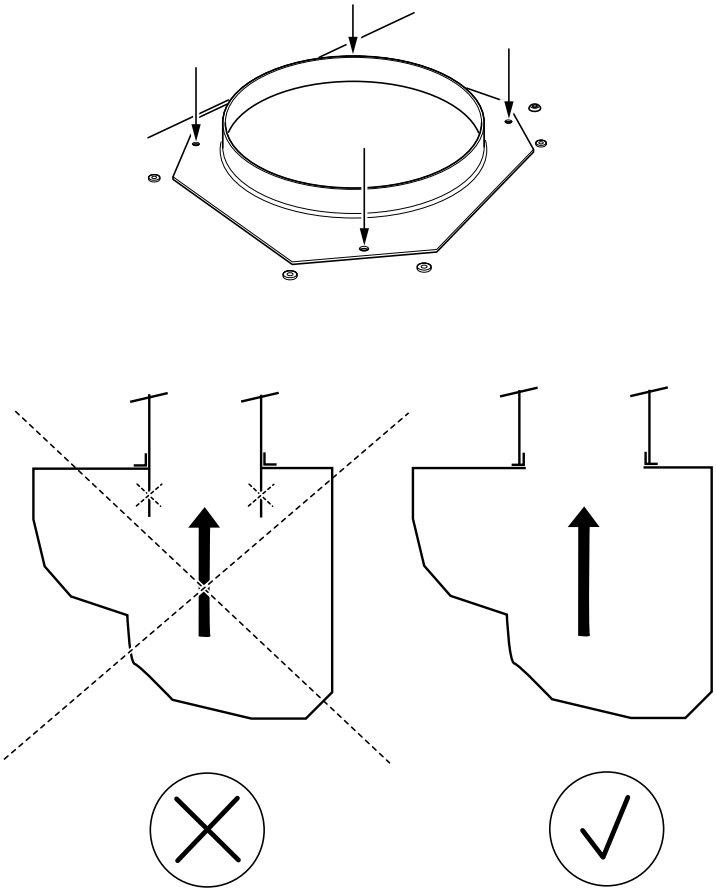

fig.7655

5 Evacuation system

5.1 Air principle

The fan creates low pressure in the machine, drawing air into the drum via the heating unit.

The heated air passes through the garments and the drum holes.

The air then flows out through a lint filter positioned below the drum. Then the air is evacuated through the fan and exhaust system.

Note!
It is very important that the machine gets enough fresh air in order to get the best drying result.

5.2 Fresh air

For maximum efficiency and the shortest possible drying time, it is important to ensure that fresh air is able to enter the room from the outside in the same volume as that is blown out of the room

To avoid draught in the room it is important to place the air inlet behind the machine.

Provisions for adequate air supply:

- The area of the air inlet opening is recommended to be five times the size of the exhaust pipe area. The area of the inlet opening is the area through which the air can flow without resistance from the grating/slatted cover.

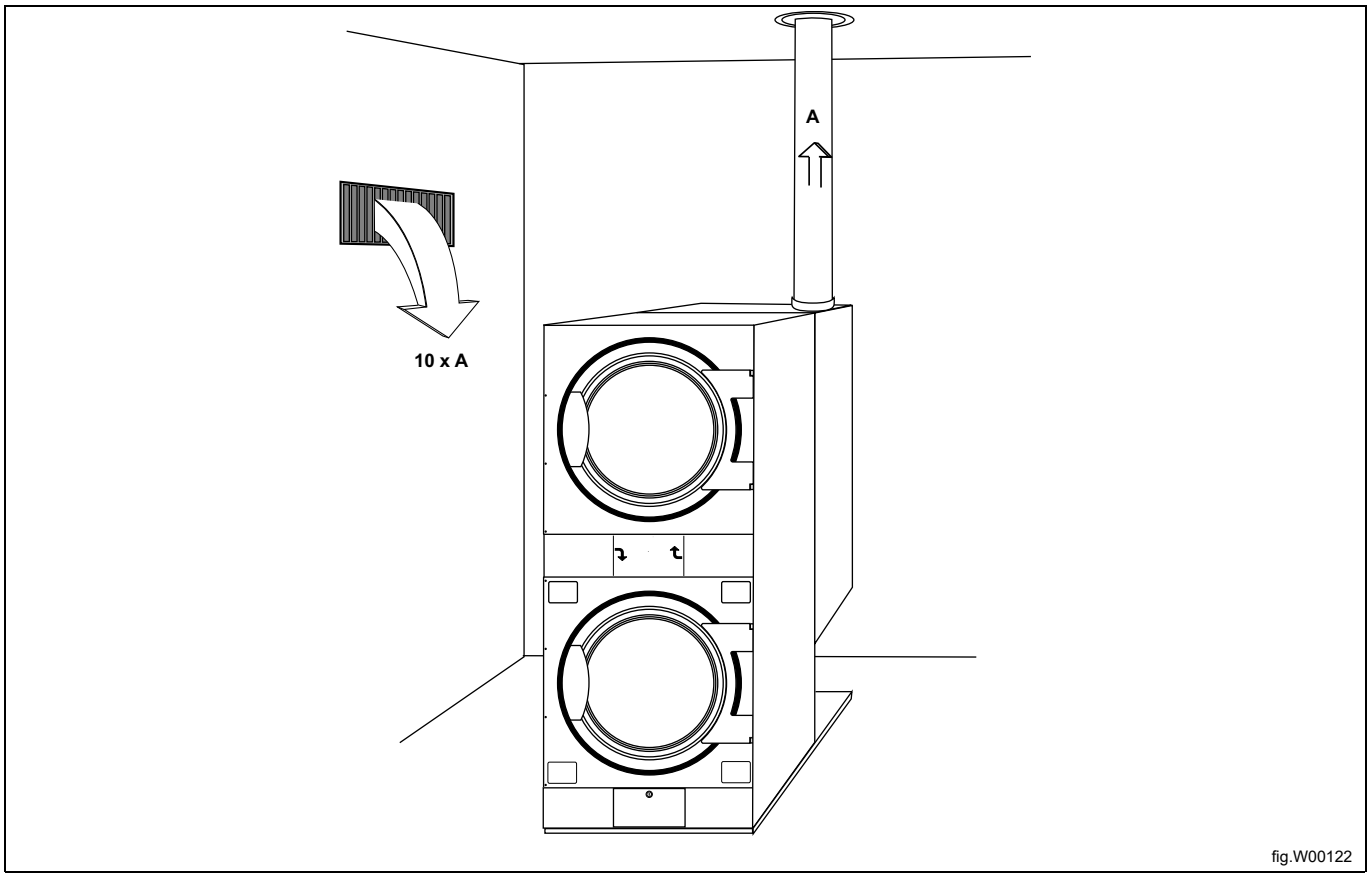

fig.W00122

Note!
Gratings/slatted covers often block half of the total fresh air vent area. Remember to take this into account.

5.3 Exhaust duct

- Only rigid or flexible metal duct should be used for exhausting.
- Plastic ducting is not to be used.
- Recommended material for exhaust is galvanized steel.
- The duct is not to be assembled with screws or other fastening means that extend into the duct and catch lint, instead use for example clamps and high temperature silicone.
- The exhaust air should not be vented into a wall, a ceiling, or a concealed space of building.
- The exhaust duct must lead clear of the building as condensation may cause frost damage to the building.
- The exhaust duct must lead to the outdoors.
- The exhaust duct must be placed in such a way that it is protected on the outside from for example impacts or water ingress.
- The exhaust duct must be smooth on the inside (low air resistance).
- The exhaust duct must have gentle bends.

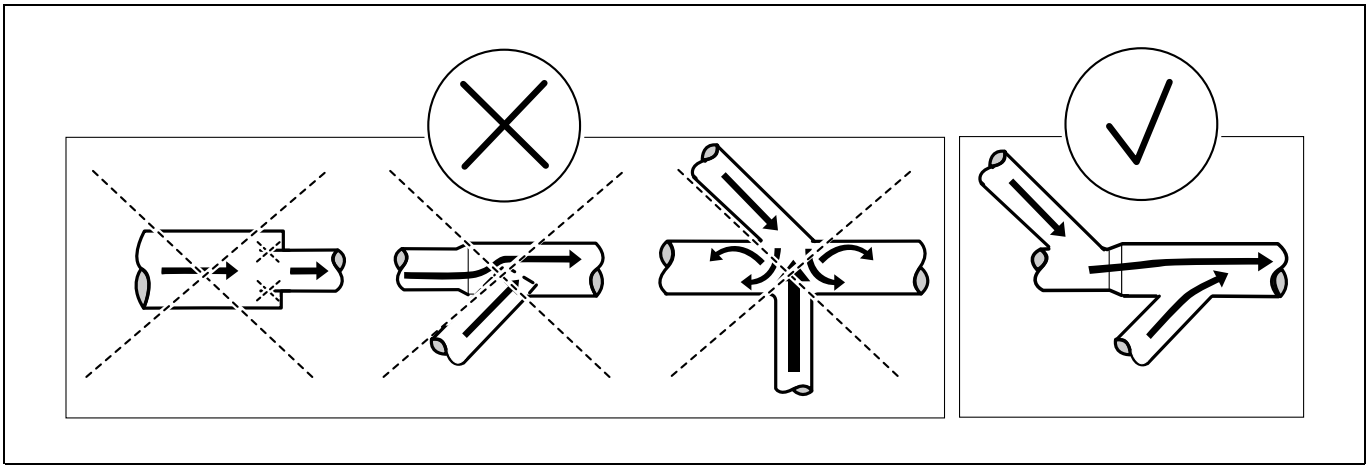

5.4 Shared exhaust duct

It is recommended that each machine is connected to a separate exhaust duct.

When there is more than one machine that shall use the same exhaust duct the exhaust duct must increase after each machine. The recommended diameter increase progression is the one in the table.

If there is more than one machine installed on the same exhaust pipe, it is mandatory to adjust the airflow/static back pressure on each machine when both pockets on all machines are started and running a program with no heat.

Please consider that unnecessarily large ducts create issues with the draught.

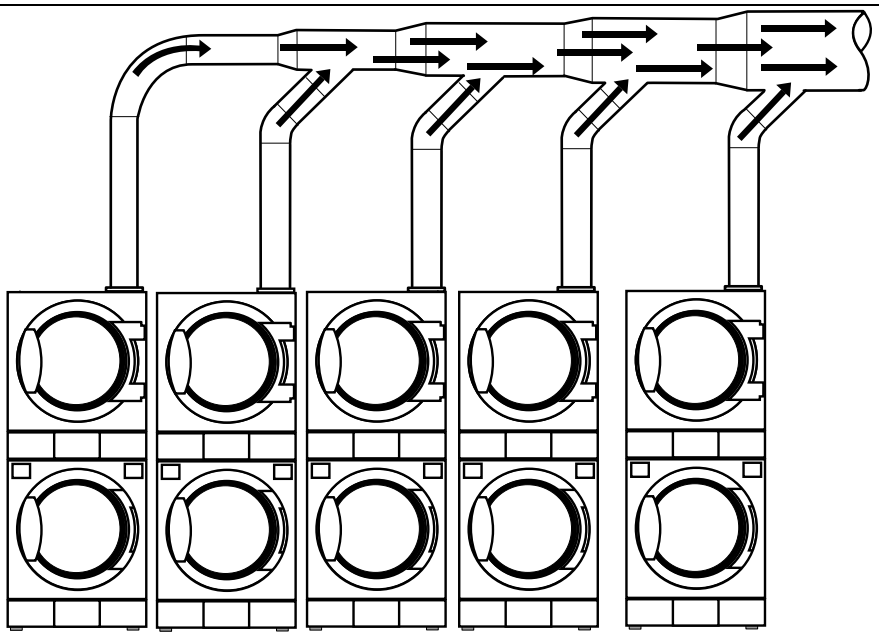

fig.W00123

Number of machines		1	2	3	4	5	6	7	8	9	10
Exhaust duct	⌀ mm	200	315	400	400	500	500	630	630	630	800
Recommended area of fresh air intake	m^2	0.32	0.78	1.26	1.26	1.96	1.96	3.12	3.12	3.12	5.02
Minimum area of fresh air intake	m^2	0.12	0.24	0.36	0.48	0.6	0.72	0.84	0.96	1.08	1.2

The exhaust duct diameter must not be reduced.

5.5 Exhaust dimensioning

It is important that the machine has correct air volume compared to each machines power.

If the air flow is smaller or larger this will result in a longer drying period.

If the outlet pipe is long or the ventilation is not properly designed we recommend to clean the outlet pipes periodically. Usually, longer ducts need more frequent cleaning.

The exhaust pipes shall be short in order for the machine to work in the best way.

All cover panels must be mounted in order for the machine to work in the best way.

5.6 Adjusting the air flow

Adjusting the air flow may only be carried out by authorized personnel.

For airflow adjustment ability, a damper need to be incorporated into the exhaust piping system.

An air reducing kit: 472997901 (damper) is available as an accessory to be ordered, or you can use a local resource damper.

If necessary, install the air reducing kit to the machine according to its instruction and then adjust the air flow/static back pressure according to the following instructions.

Note!

For stack dryer, the static back pressure value must be measured in NTC position of bottom pocket only, in a cold empty machine and running a program with NO heat on both pockets at the same time.

Note!

Only on machines with 3–phase power supply, ensure that the direction of the fan wheel is correct.
If the direction is wrong, swap two of the three phases on the connection terminal.

- Demount the heating sensor (NTC sensor) (A) of the bottom pocket and insert the measuring device. Make sure the connection is tight to prevent air leakage.
- Connect the power to the machine according to "Electrical connection" section.
- Measure with a pressure measuring instrument (manometer), in cold empty machine and running a program with NO heat on both pockets at the same time.

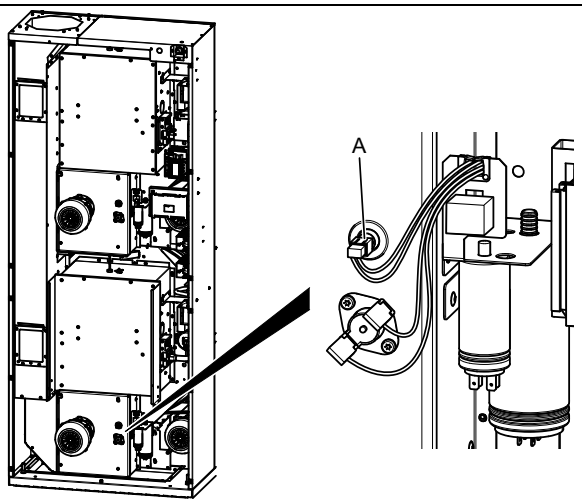

fig.X01874A

If the air reducing kit: 472997901 has been installed, follow the example on how to adjust the air flow.

- Adjust the air flow/static back pressure according to provided technical data and tighten the screws completely when the correct air flow has been achieved.
- Slide the reducing plate (G) to adjust the air flow.
  - 100% open (H).
  - 80% open (I).

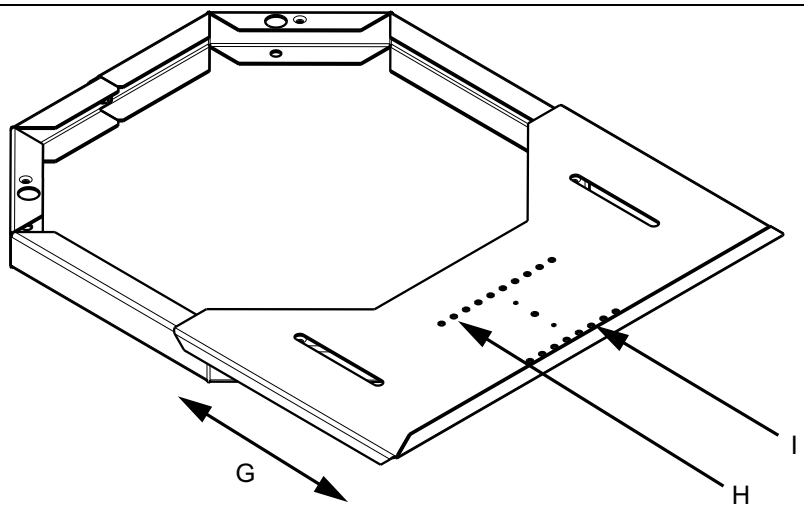

fig.X00888

Heating / Frequency	Static back pressure value measured in NTC position of bottom pocket only, in cold empty machine and running a program with no heat on both pockets at a time (Pa)
Electric / 50 Hz / 60 Hz	400
Gas / 50 Hz / 60 Hz	400

Alternative measuring method

Adjusting the air flow may only be carried out by authorized personnel.

Use a home made U tube manometer, a hose (max ⌀ 10 mm), with water. Insert one end of the hose in the hole, hold the hose according to the picture so that the water is in level.

Start the machine and measure the difference between the water in one of the hose ends with the other.

1 mm = 10 Pa.

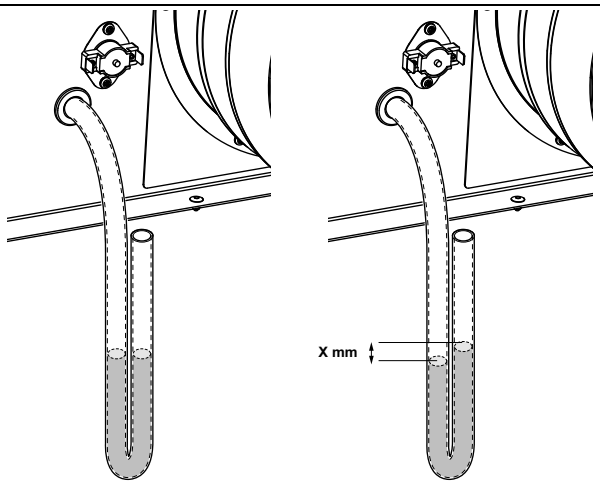

fig.7528

When the dryer is adjusted remount the heating sensor (NTC sensor) (A)

6 Gas connection

6.1 Fasten the label

Before installing the machine fasten the label “Read the user instructions” on the inside of the door in a suitable place and at the front panel.

The label must have the correct country code, choose the correct label from the gas kit.

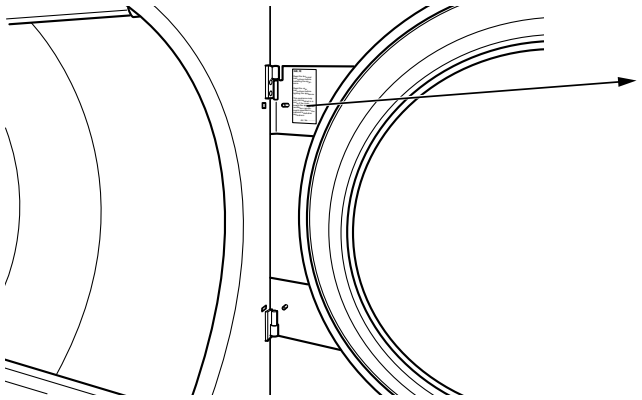

GB, IE

Read the technical instructions before installing the appli-ance.

Read the user instructions before lighting the appliance.

This appliance may only be installed in a room if the room meets the appropriate ventilation require-ments specified in the national installation regulations.

Art. No. .....

fig.7514

6.2 General

May only be carried out by qualified personnel.

Mount a shut-off valve upstream from the machine.

The factory nozzle pressure setting corresponds to the fuel value given on the data label.

Check that the nozzle pressure and fuel value correspond with the values in the gas tables on the following pages. If not, contact the supplier.

Bleed the pipe system before connecting the machine.

Note!

After connection all joints must be checked. There must not be any leaks.

6.3 Gas installation

Note!

- **The default gas appliances are built to run on natural gas (GNH) according to 2H or 2E (G20).**
- **The default gas appliance shall not be installed at an altitude above 610 m (2001 ft).**
- **To run on another gas type gas converting must be done on the machine.**
- **The gas converting accessories for other gases at altitudes below 610 m (2001 ft) are in the accessory bag.**
- **For LPG use gas qualities according to GPA Midstream Standard 2140-23.**

The data label shows the injector size and the injector pressure and the countries that use this gas quality:

AL	Albania	IE	Ireland
AT	Austria	IS	Iceland
BE	Belgium	IT	Italy
BG	Bulgaria	LT	Lithuania
CH	Switzerland	LU	Luxembourg
CY	Cyprus	LV	Latvia
CZ	Czech Republic	MK	Republic of Macedonia
DE	Germany	MT	Malta
DK	Denmark	NL	Netherlands
EE	Estonia	NO	Norway
ES	Spain	PL	Poland
FI	Finland	PT	Portugal
FR	France	RO	Romania
GB	United Kingdom	SE	Sweden
GR	Greece	SI	Slovenia
HR	Croatia	SK	Slovakia
HU	Hungary	TR	Turkey

You should check the kind of energy gas that is available in your place and check high altitude of the machine located place.

There are many gas types of the same kind but the machine should be equipped with different kinds of nozzles depending on the gas type.

For non-european countries check the heat value of the energy gas and compare it to the declared heat value of gas in the attached label.

6.4 Table of pressure and adjustment

Liquid petroleum gas (LPG)	Gas category	Inlet pressure (mbar)	Nozzle pressure (mbar)	Nozzle size (⌀ mm)	Air reducing/ restriction plate (mm)	Label number	May be available in following countries
BP mixtures according to GPA Midstream Standard 2140-23	3+	28-30 / 37	No regulation	2.30	Default 487230035	490375657	BE, CH, CY, CZ, ES, FR, GB, GR, IE, IT, LT, LU, LV, PT, SK, SI
Commercial Butane according to GPA Midstream Standard 2140-23	3B/P	30, 37, 50	28	2.30	Default 487230035	490375658	BE, CY, DK, EE, FI, FR, GB, HU, IT, LT, NL, NO, SE, SI, SK, RO, HR, TR, BG, IS, LU, MT, PL, AT, CH, DE, SK
Propane HD-5 according to GPA Midstream Standard 2140-23	3P	30, 37, 50	28	2.40	Default 487230035	490375659	FI, NL, RO, BE, CH, CZ, IE, IT, ES, FR, GR, GB, HR, LT, NL, PL, PT, SI, SK, AT, CH, DE, NL, LU, SK

Natural gas	Gas category	Inlet pressure (mbar)	Nozzle pressure (mbar)	Nozzle size (⌀ mm)	Air reducing/ restriction plate (mm)	Label number	May be available in following countries
	2H, 2E	20	8	4.00	Default 487230035	Default	AT, BG, CZ, DK, EE, FI, GR, HR, HU, IS, IE, IT, LV, LT, NO, PT, RO, SK, SI, ES, SE, CH, TR, GB, DE, PL, LU
	2E+	20 / 25	No regulation	3.30	Default 487230035	490375649	BE, FR
	2E (G20)	20	8	4.00	Default 487230035	490375650	NL
	2L (G25)	25	12				
	2(43.46-45.3 MJ/m3 (0 °C)) (G25.3)	25	12				
	2LL	20	12	4.00	Default 487230035	490375650	DE

Note!

- **The default gas appliances are built to run on natural gas (GNH) according to 2H or 2E (G20).**
- **The default gas appliance shall not be installed at an altitude above 610 m (2001 ft).**
- **To run on another gas type gas converting must be done on the machine.**
- **The gas converting accessories for other gases at altitudes below 610 m (2001 ft) are in the accessory bag.**
- **For LPG use gas qualities according to GPA Midstream Standard 2140-23.**

6.5 Test run

Note!

Before test run the machine, ensure that the air flow/static back pressure has been adjusted accorded to the "Evacuation system" section. Adjust the air flow if necessary.

- Loosen the measuring branch screw (2) 1/4 turn; connect a manometer to the measuring branch and make sure the connection is tight to prevent air leakage.
- Connect the power to the machine and select a program with heat.
- Start the machine.
- Check that the nozzle pressure is correct according to the gas type, see "Table of pressure and adjustment".
- If the nozzle pressure should be adjusted:
  - Demount the cover screw (3).
  - Turn the screw (4). Clockwise: increasing nozzle pressure.
  - Turn the screw (4). Counter Clockwise: decreasing nozzle pressure.
- Check that the gas is burning evenly. The blue flame on the burner is preferred.

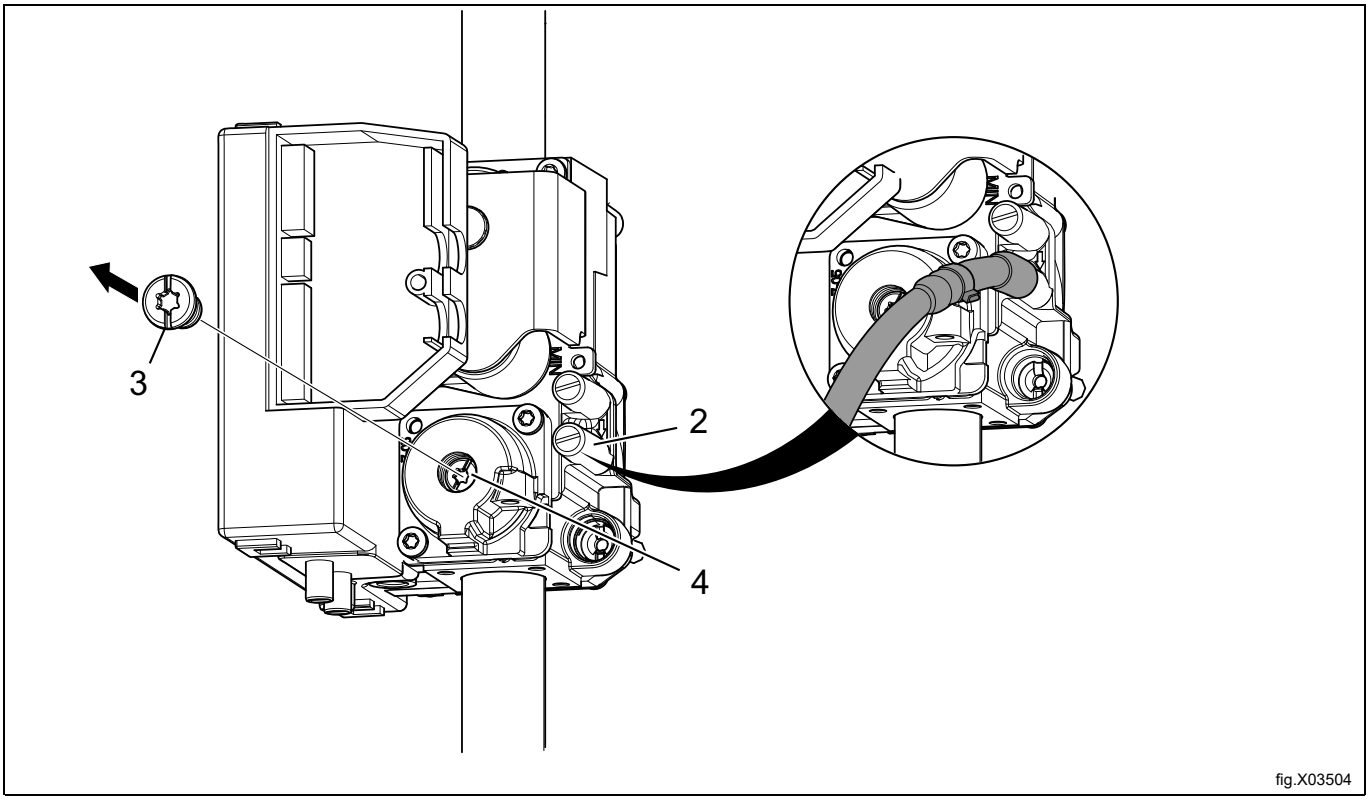

- Remount the cover screw (3).
- Remove the manometer and tighten the screw (2) when the adjustments are done.

Note!

After connection all joints must be checked. There must not be any leaks.

6.6 Converting instructions

- Disconnect the power to the machine.
- Demount the rear panel.
- Demount the air reducing plate (A).
- Remove the nozzle (1).
- Mount the new supplied nozzle (or take it from the high altitude kit) according to the gas type that will be used. For more information, please refer to the section "Table of pressure and adjustment".

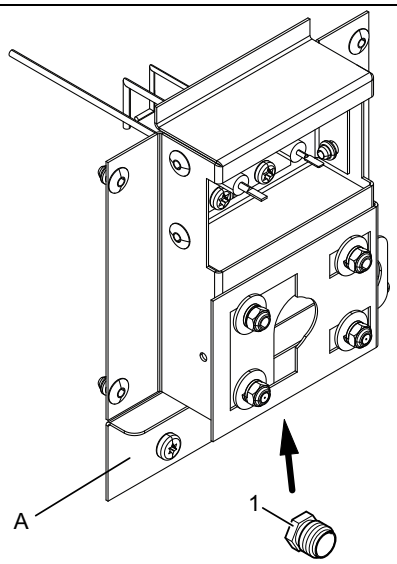

fig.X03423

- Loosen the measuring branch screw (2) 1/4 turn; connect a manometer to the measuring branch and make sure the connection is tight to prevent air leakage.
- Ensure that the air flow/static back pressure has been adjusted accorded to the "Evacuation system" section. Adjust the air flow if necessary.
- Connect the power to the machine and select a program with heat.
- Start the machine.
- Check that the nozzle pressure is correct according to the gas type, see "Table of pressure and adjustment".
- If the nozzle pressure should be adjusted:
  - Demount the cover screw (3).
  - Turn the screw (4). Clockwise: increasing nozzle pressure.
  - Turn the screw (4). Counter Clockwise: decreasing nozzle pressure.

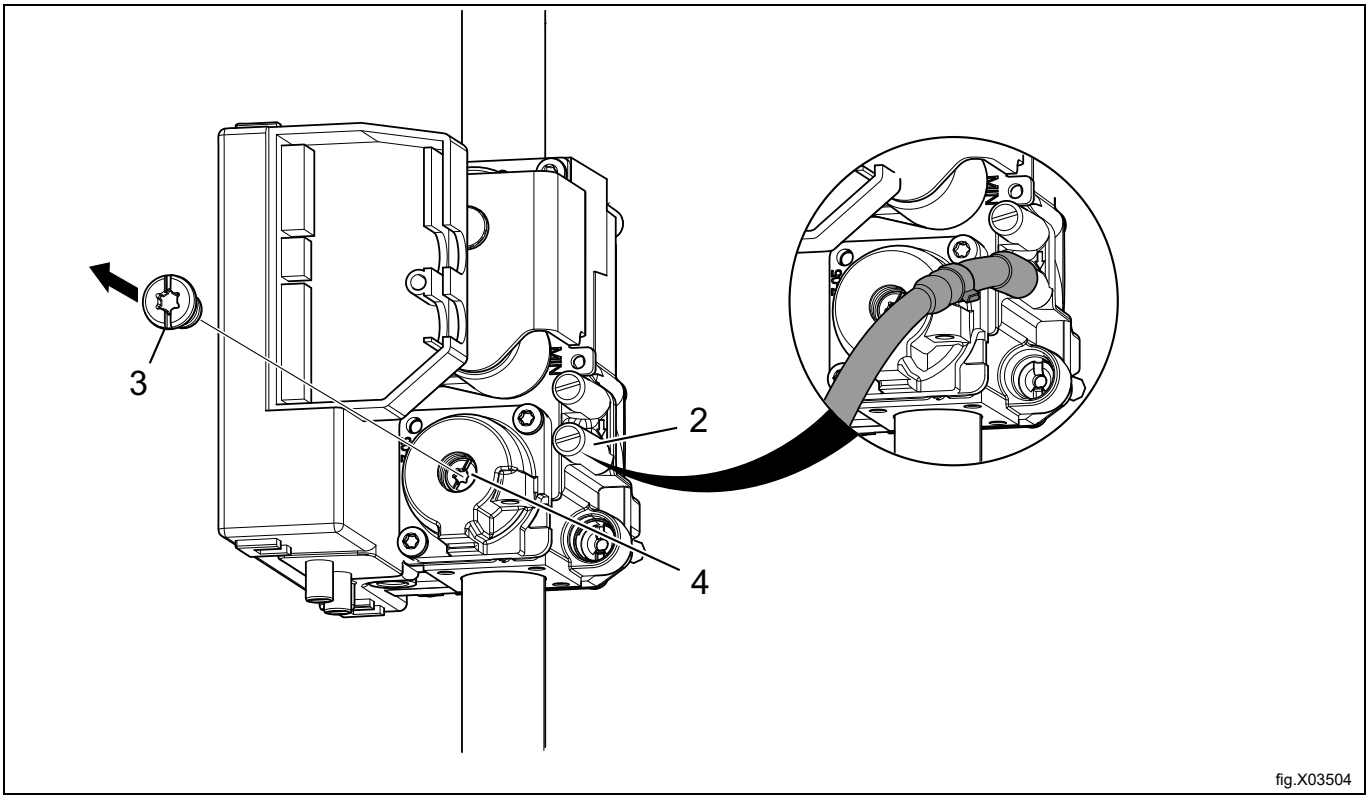

fig.X03504

- Check that the gas flame burns evenly.
- Mount the cover screw (3).
- Remove the manometer and tighten the screw (2) when the adjustments are done.
- Remount the rear panel.
- Put the correct gas label on the data plate, see "Data label" section.

Note!

After connection all joints must be checked. There must not be any leaks.

6.7 Data label

When the machine is to be converted to another gas type, the data label at the rear of the machine must be updated in order for the data to be correct.

Place the data label enclosed in the conversion kit on top of the data label as shown below. If there are more than one data label, select the label with the correct country code and gas type.

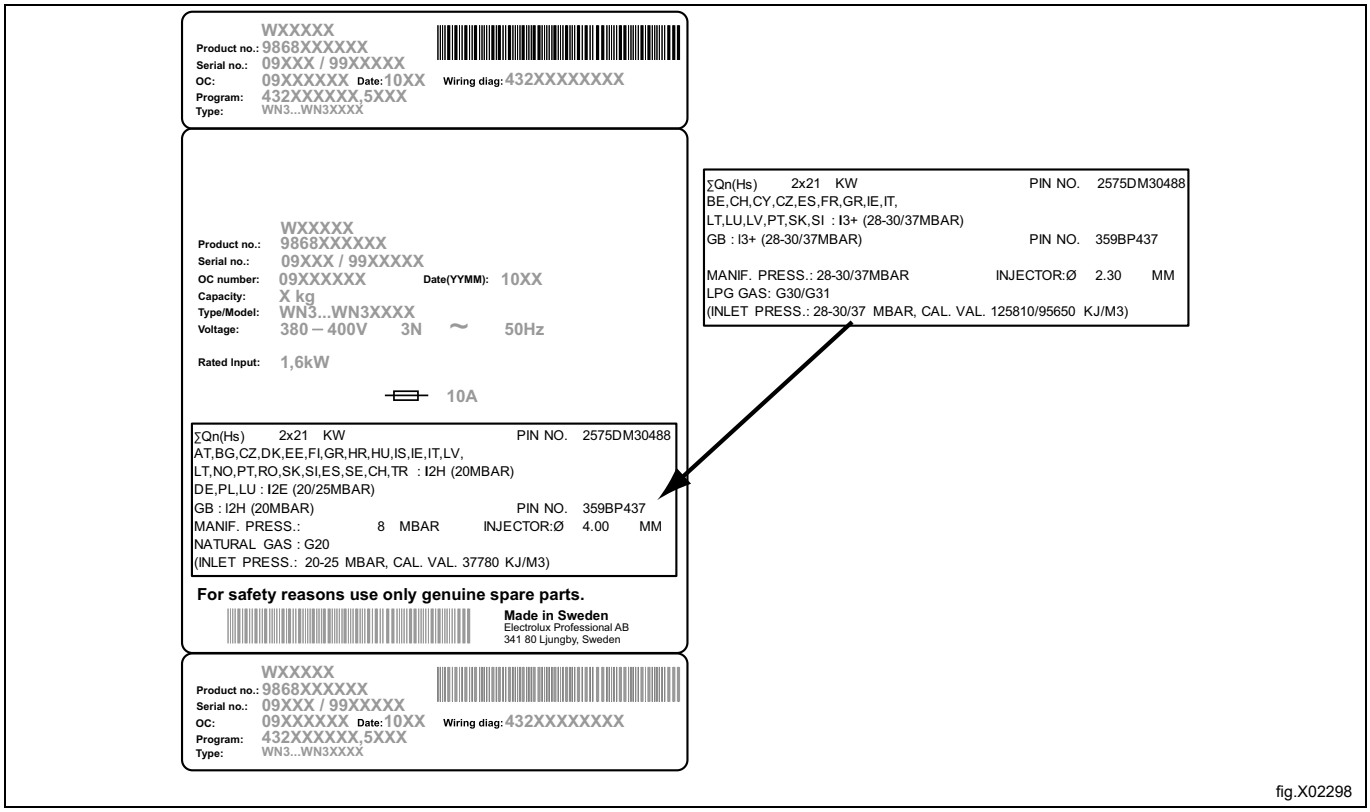

fig.X02298

7 Electrical connection

7.1 Electrical installation

The electrical installation may only be carried out by qualified personnel.

Machines with frequency-controlled motors can be incompatible with certain types of earth leakage circuit breaker. It is important to know that the machines are designed to provide a high level of personal safety, which is why items of external equipment such as earth leakage circuit breakers are not necessary but is recommended. If you still want to connect your machine across an earth leakage circuit breaker, please remember the following:

- contact a skilled, authorised installation company to ensure that the appropriate type of breaker is chosen and that the dimensioning is correct
- for maximum reliability, connect only one machine per earth leakage circuit breaker
- it is important that the earth wire is properly connected.

In instances where the machine is not equipped with an omni-polar switch, one must be installed beforehand.

In accordance with the wiring rules: mount a multi-pole switch prior to the machine to facilitate installation and service operations.

The connecting cable shall hang in a gentle curve.

For AU/NZ: Fixed wiring is in accordance with AS/NZS 3000.

7.2 Single-phase connection

Gas heated tumble dryer

For a single-phase gas heated tumble dryer, there are two alternatives that the power supply can be connected to on the machine.

Use a suitable solution for your installation according to the local wiring rules/regulations.

Demount the rear panel of the machine.

Connect the power cable from the circuit breaker (BK) (local resource) to the machine as shown.

Common power supply for top and bottom pockets	
1AC T = Top tumble dryer B = Bottom tumble dryer BK = Circuit breaker	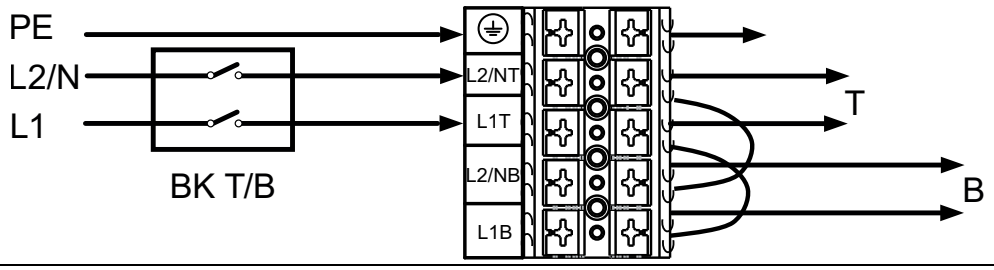
Separate power supplies for top and bottom pockets	
1AC T = Top tumble dryer B = Bottom tumble dryer BK = Circuit breaker	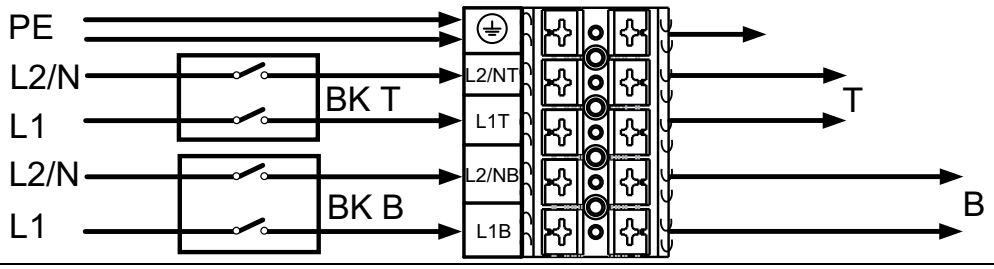

When the power cables are connected:

- Check that both drums are empty.
- Check that the air flow/static back pressure is correct, see "Evacuation system" section.
- Check that the gas installation is correct, see "Gas connection" section.
- Remount the rear panel and test run the machine.

7.3 Three-phase connection

Gas heated tumble dryer

Demount the rear panel of the machine.

Connect the power cables from each circuit breaker (BK) (local resource) to each pocket of the machine as shown.

3AC T = Top tumble dryer B = Bottom tumble dryer BK = Circuit breaker	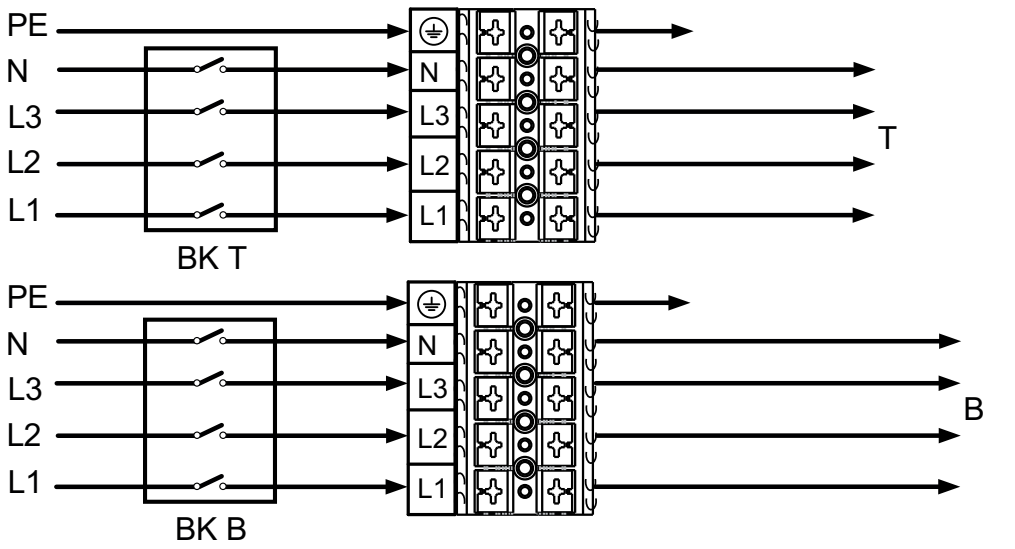

When the power cables are connected:

- Check that both drums are empty.
- Check that the air flow/static back pressure is correct, see "Evacuation system" section.
- Check that the gas installation is correct, see "Gas connection" section.
- Remount the rear panel and test run the machine.

Electric heated tumble dryer

Demount the rear panels of the machine.

Connect power cables to each multi-pole switch of the machine as shown.

3AC T = Top tumble dryer B = Bottom tumble dryer	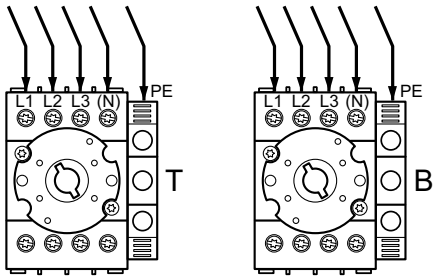

When the power cables are connected:

- Check that both drums are empty.
- Check that the air flow/static back pressure is correct, see "Evacuation system" section.
- Remount the rear panel and test run the machine.

7.4 Electrical connections

Electrical connections					
Heating alternative	Main voltage	Hz	Heating power kW	Total power kW	Recommended fuse A
Electric heated[1]	220-240V 3~	50/60	9.0	10.0	25
	380-415V 3N/3~	50/60	9.0/13.5/18.0	10.0/14.5/19.0	16/25/32
	440V 3~	60	9.0/13.5/18.0	10.0/14.5/19.0	16/20/25
	480V 3~	60	9.0/13.5/18.0	10.0/14.5/19.0	16/20/25
Gas heated[1]	220-480V 1/1N/3/3N~	50/60	[3]	1.0	10
Gas heated[2]	220-480V 1/1N/3/3N~	50/60	[3]	2.0	10

1. Per pocket.
2. Complete machine.
3. Total power and recommended fuse does not depend on the heating power in those cases.

7.5 Functions for I/O-cards

The electrical schematic can be one of the following:

7.5.1 Central payment (2J)

To start the machine from a central payment system, the payment system must transmit a start pulse 300–3000 ms (500 ms is recommended) with a minimum pause of 300 ms (500 ms is recommended) between two pulses. The start pulse can be either 230V or 24V. In order to receive a feedback signal once the machine has started, 230V or 24V must be connected to connection 19. The feedback signal on connection 18 remains active (high) during the entire program.

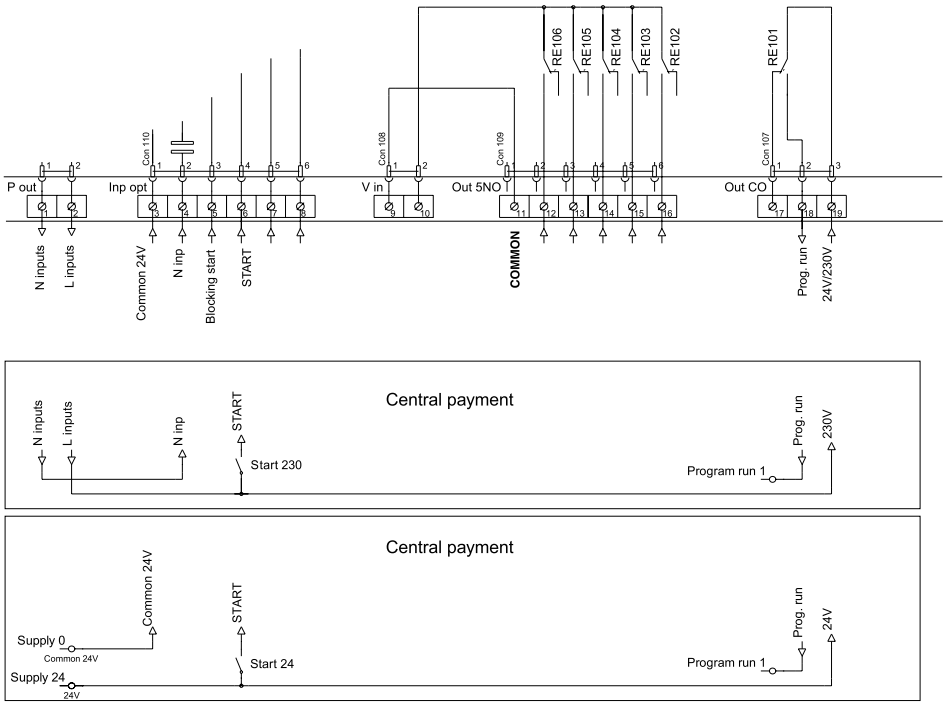

fig.7440

7.5.2 Central payment (2J)

The central payment or booking system shall transmit an active (high) signal to the machine once permission has been granted to start the machine. The signal must remain active (high) during drying. When the signal gets inactive (low) the machine will abort ongoing program and enter cooling. The signal can be either 230V or 24V. In order to receive a feedback signal once the machine has started, 230V or 24V must be connected to connection 19. The feedback signal remains active (high) during the entire program.

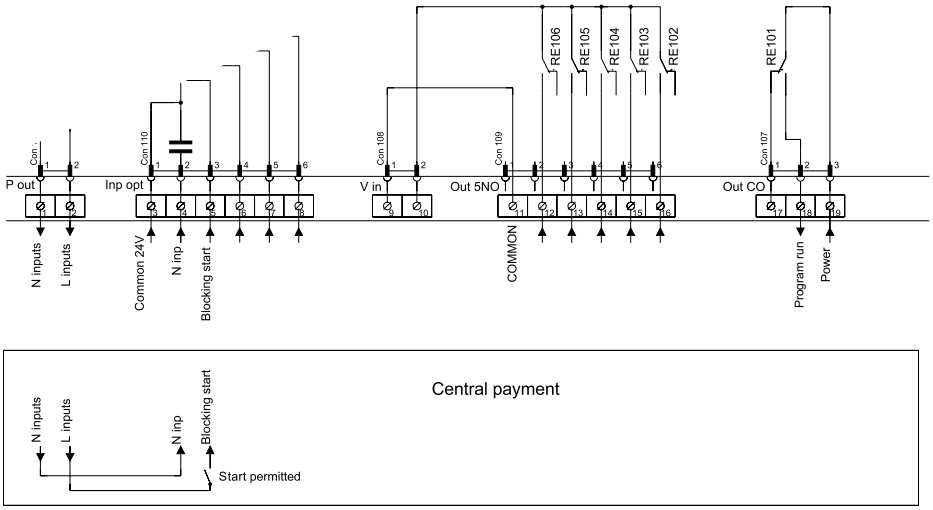

fig.7439

7.5.3 External coin meter/Central payment (2K)

The signal received from external coin meters must be a pulse between 300–3000 ms (500 ms is recommended) with a minimum pause of 300 ms (500 ms is recommended) between two pulses.

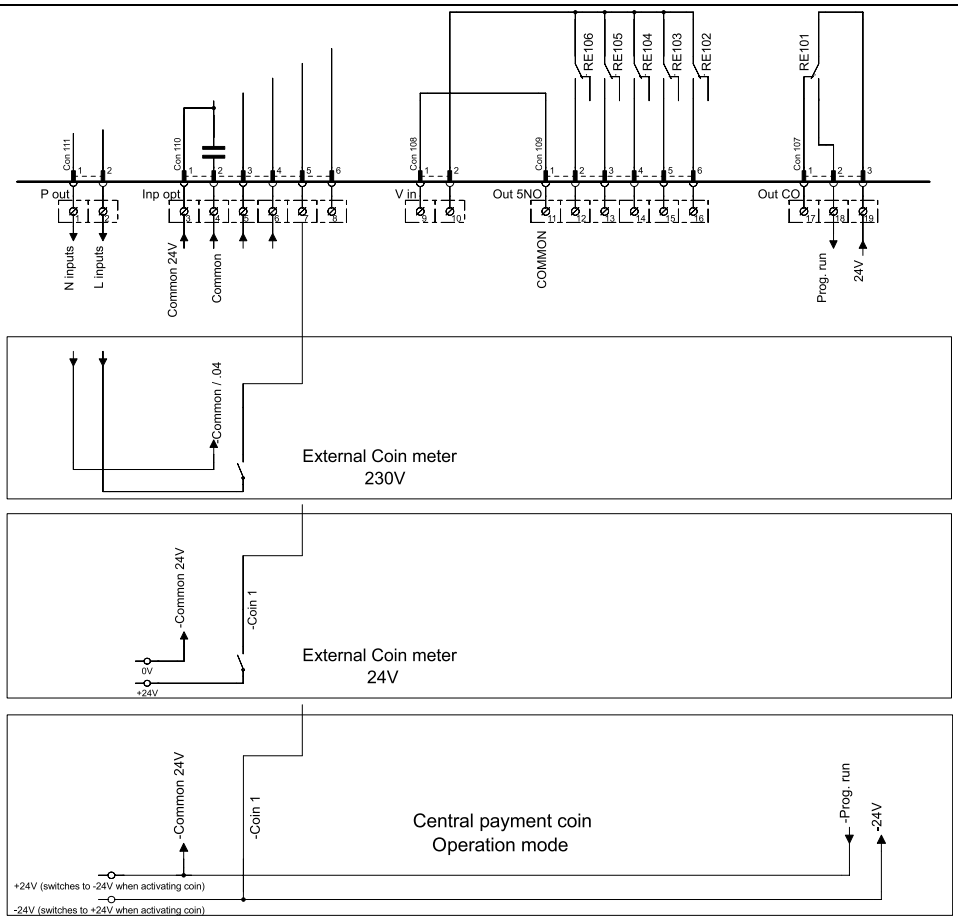

fig.7438

7.5.4 Price reduction (2K)

By maintaining an activated (high) signal on connection 5 ("Price red"), the price of the program can be reduced. This function has a number of uses, including providing reductions during a specific period of the day. Whilst the signal remains active (high), the price of the program is reduced (or the time is increased on time programs), by the percentage entered in the price programming menu.

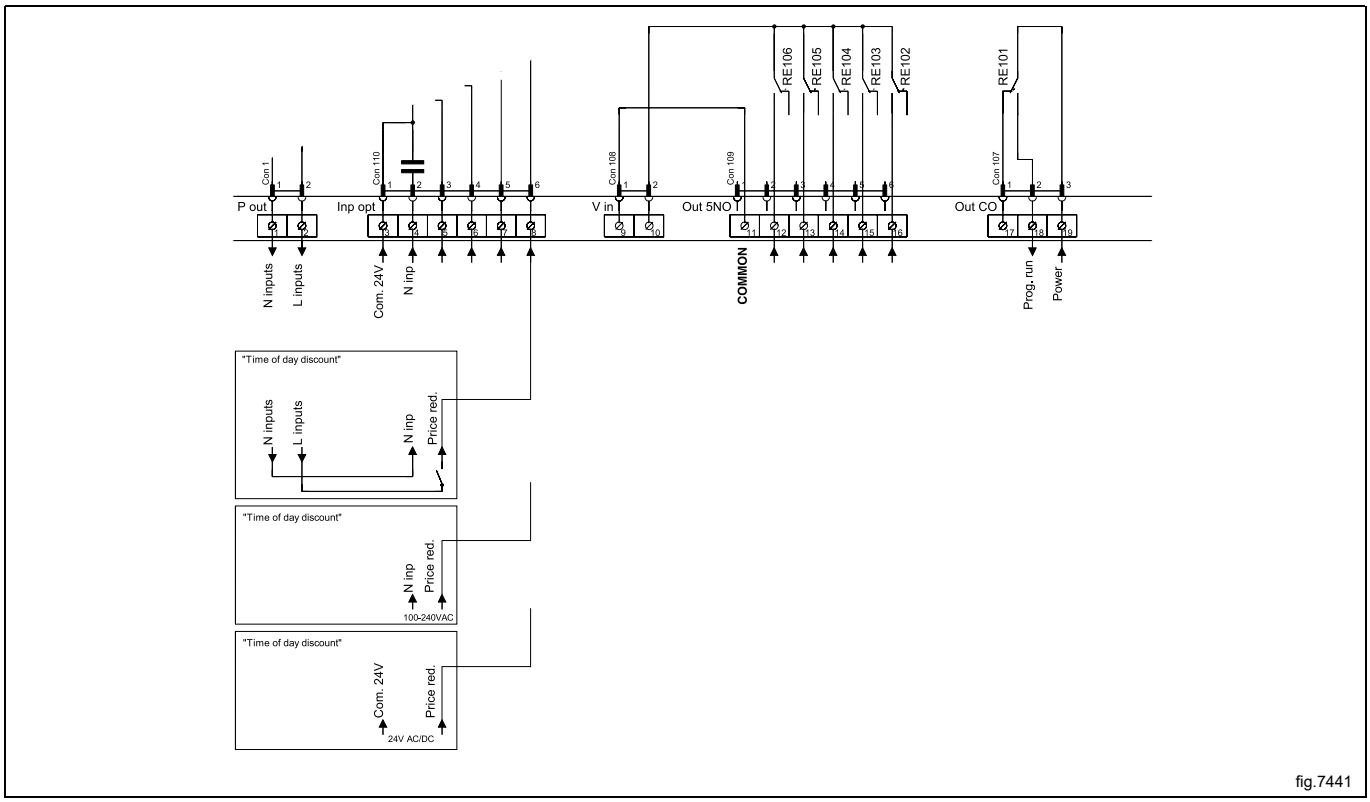

fig.7441

7.6 Mounting the switches

Mount the switches enclosed with the machine on the back of the machine.

The switches shall be fastened with four screws each. Use tightening torque 1.7-2.2 Nm.

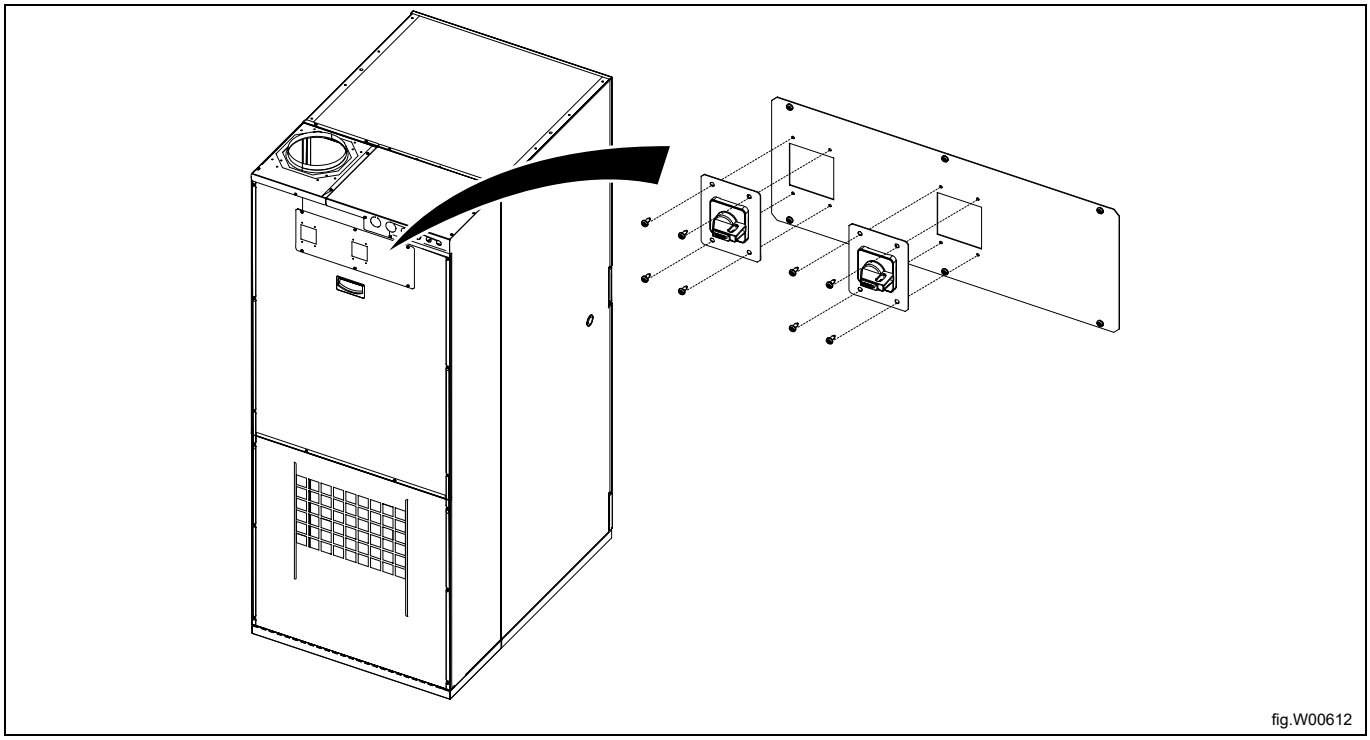

fig.W00612

ON position is upwards.

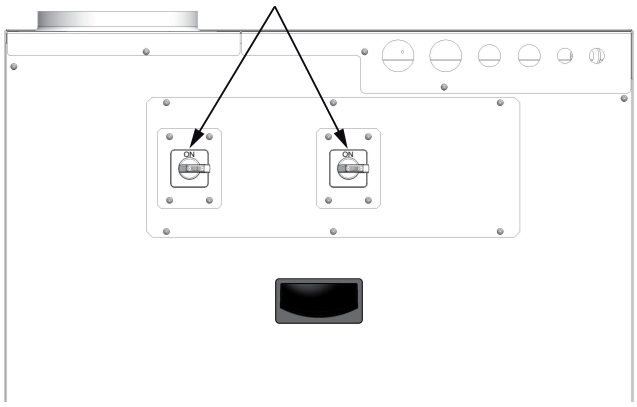

fig.W00645

7.7 Mounting the connectivity connectors (only valid from machine No. 3482009901–)

At delivery the connectivity connectors (A) are hanging loose and must be mounted.

Electric heated machine	Gas heated machine
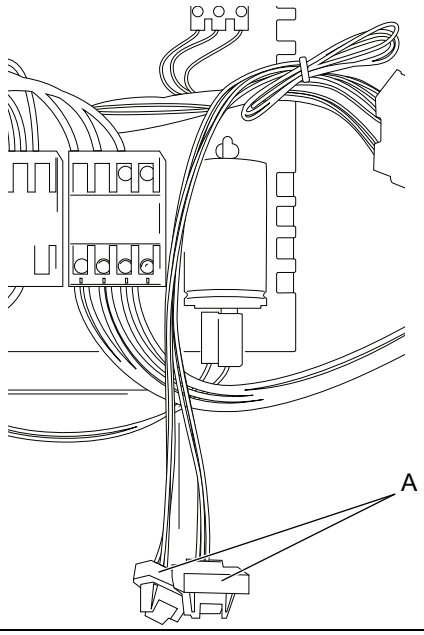	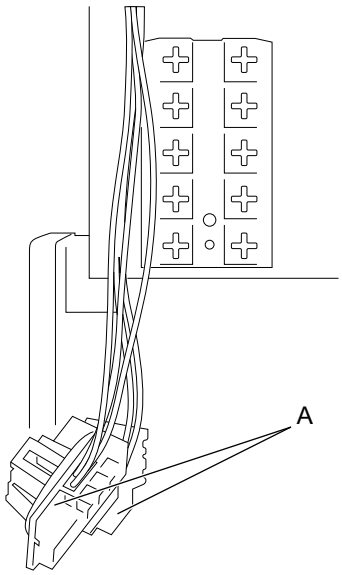

Demount the rear panel to get access to the connectivity connectors.

Mount the connectivity connectors from the inside of the upper panel.

The illustration shows an electric heated machine as an example but the procedure is the same also for a gas heated machine.

Note!

The connector with the RED mark (B) is for the bottom pocket.

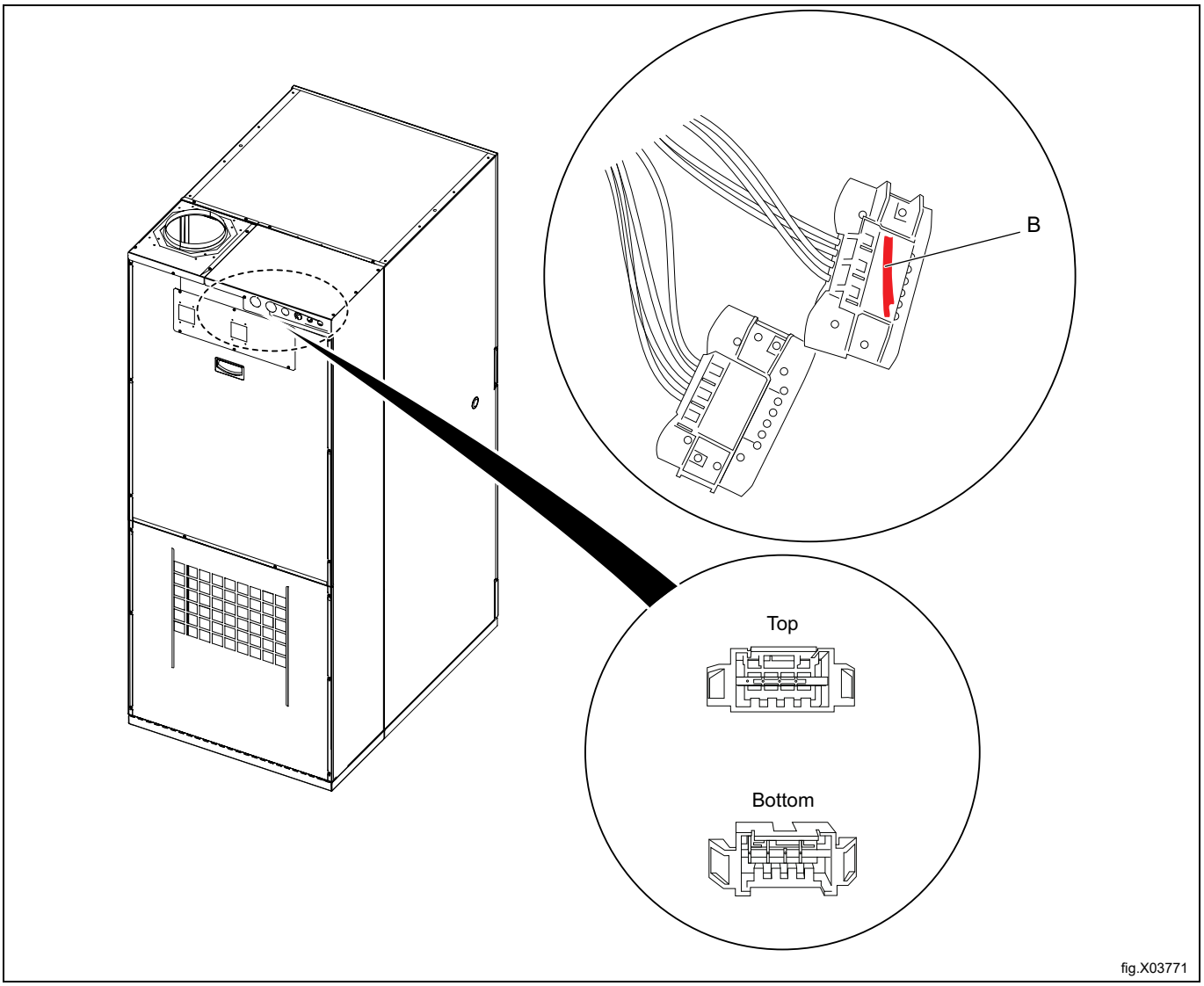

Remount the panel.

8 At first power up

When the installation is complete and the power is connected for the first time you will be forced to make the following settings. When one setting is ready you will automatically enter the next one. Follow the instructions on the display.

- Select language
- Set time and date
- Activate/deactivate the service alarm

8.1 Select language

Select language from the list on the display. Scroll with the up- and down arrows.

This will be the language that all display messages, program names etc will be presented in.

8.2 Set time and date

Select `YES` and press ▶II to get to the `TIME/DATE` menu.

Activate the `SET TIME` menu and set the correct time.

Save the settings.

Activate the `SET DATE` menu and set the correct date. Start by setting the year.

- Set the year. Exit to continue with a long press on ▶II .
- Set the month. Exit to continue with a long press on ▶II .
- Set the day. Exit with a long press on ▶II and then save with a long press on ▶II .

Exit the menu when ready.

8.3 Activate/Deactivate the service alarm

Set if the machine shall give a service alarm or not with `YES` or `NO`.

Exit and save the settings.

9 Function check

May only be carried out by qualified personnel.

A function check must be made when the installation is finished and before the machine can be ready to be used. Whenever a repair has been made, a function check must be performed before the machine can be used again.

Check the automatic stop of the machine

- Start the machine.
- Check if the micro switches are working properly:
  The machine must stop if the door or filter door is opened.

Check the direction of rotation (only on machines with 3–phase power supply, marine installation)

Demount the rear panel and start a program. Check that the direction of the fan wheel is correct.

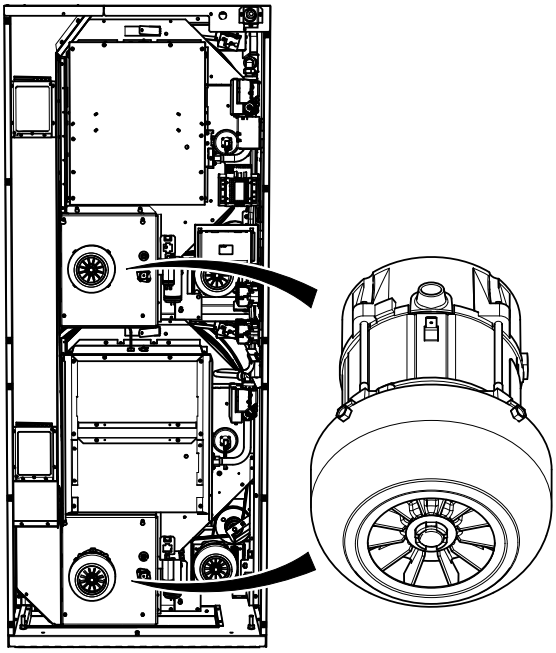

fig.X01867

If the direction is wrong, swap two of the three phases to the left on the connection terminal.

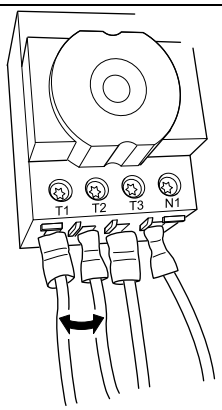

fig.7119

Check the heat

- Let the machine work for five minutes on a program with heat.
- Check that the heating is working by opening the door and feel if there is heat in the drum.

Ready to use

If all tests are OK the machine is now ready to be used.

If some of the tests failed, or deficiencies or errors are detected, please contact your local service organisation or dealer.

10 Disposal information

10.1 Appliance recyclability and disposal

10.1.1 Recyclability

Our appliances are manufactured using a significant percentage of recyclable metals (such as stainless steel, iron, aluminium, galvanized sheet, copper, etc.), which can be recovered through the local recycling systems, in compliance with the regulations in force in the country of use.

National regulations regarding waste disposal may vary. Disposal of the appliance must therefore be carried out in accordance with the applicable legislation and the directives issued by the competent authorities in the country where the appliance is decommissioned.

The components of the appliance must be separated and disposed of in accordance with their material composition (e.g. metals, oils, greases, plastics, rubber, refrigerant gases, insulating boards and other insulating material, glass wool, LEDs, etc.) and in full compliance with applicable local and international waste management regulations.

Compressors may contain oils and refrigerants fluids - are special waste and has to be recycled on local bases regulations.

10.1.2 Procedure regarding appliance disposal and component / material recovery

This product should not simply be disposed of in the environment at the end of its life cycle; it is imperative instead either to dispose of it in accordance with local environmental regulations, or, preferably, to deliver it whole to an authorized recycling center.

All removed components, including doors and other structural parts, must be delivered together with the appliance to an authorized recycling or dismantling facility.

The dismantling/recycling center will apply state of the art technologies and methods available to them to effectively disassemble the products for best recyclability.

Note that printed circuit boards, electrical motors or other components identified in European Union legislation to be of high critical raw materials recovery potential need to be addressed specifically.

In case of doubts or questions, always refer to your reference customer care service.

Before disposing of the appliance, carefully inspect its physical condition and preservation state, checking for potential leaks of liquids or gases, as well as for broken parts that may pose hazards during handling and subsequent dismantling.

	The symbol on the product indicates that this product should not be treated as domestic waste, but must be correctly disposed of in order to prevent any negative consequences for the environment and human health. For further information on the recycling of this product, contact the local dealer or agent, the customer care service or the local body responsible for waste disposal.

Note!
When dismantling the appliance, any marking, this manual and other documents concerning the appliance must be destroyed.

10.2 Disposal of packing

The packing must be disposed of in compliance with the current regulations in the country where the appliance is used. All the packing materials are environmentally friendly.

They can be safely kept, recycled or burned in an appropriate waste incineration plant. Recyclable plastic parts are marked as following examples.

PE	Polyethylene: • Outer wrapping • Instructions bag
PP	Polypropylene: • Straps
PS	Polystyrene foam: • Corner protectors

Electrolux Professional AB
341 80 Ljungby, Sweden
www.electroluxprofessional.com