Installation manual
Tumble dryer

TD7–8, TD7–8LAC

Type N1...

R513A



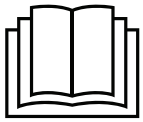

Electrolux PROFESSIONAL

438941180/GB, IE
2026.11.22

Original instructions

Contents

1 Safety Precautions 5
1.1 Additional safety precautions for gas heated tumble dryer 7
1.2 General information 7
1.3 Commercial use only 7
1.4 Copyright 7
1.5 Ergonomics certification 7
1.6 Symbols 8
2 Warranty terms and exclusions 9
3 Technical data 10
3.1 Electric heated machines 10
3.1.1 Drawing 10
3.1.2 Technical data 11
3.1.3 Connections 11
3.2 Gas heated machines 12
3.2.1 Drawing 12
3.2.2 Technical data 13
3.2.3 Connections 13
3.3 Machines with heat pump 14
3.3.1 Drawing 14
3.3.2 Technical data 15
4 Setup 16
4.1 General 16
4.2 Unpacking 16
4.3 Recycling instruction for packaging 18
4.4 Siting 19
4.5 Drain connection (only for machines with heat pump) 19
4.6 Mechanical installation 20
5 Marine installation 21
6 Evacuation system 22
6.1 Air principle 22
6.1.1 Electric- and Gas heated machines 22
6.1.2 Machines with heat pump 23
6.2 Fresh air 24
6.3 Exhaust duct 25
6.4 Shared exhaust duct 26
6.5 Exhaust dimensioning 27
6.6 Adjusting the air flow (not valid for tumble dryers with heat pump) 28
6.6.1 Diagram with pressure drop curve 30
6.6.2 Alternative measuring method 33
7 Electrical connection 34
7.1 Electrical installation 34
7.2 Single-phase connection 35
7.3 Three-phase connection 36
7.4 Electrical connections 37
7.5 Functions for I/O-boards 38
7.5.1 Enable start 38
7.5.2 Remote start/stop 39
7.5.3 Free start 40
7.6 Option 41
7.6.1 External connection 100 mA 41
8 Gas connection 42
8.1 Fasten the label 42
8.2 General 42
8.3 Gas installation 43
8.4 Table of pressure and adjustment 44
8.5 Test run 46
8.6 Converting instructions 47
8.7 Data label 49
9 Reversing the door 50
10 Stacking kit 56
10.1 Stacking kit WP7–6, WP7–7, WP7–8, TD7–8 with TD7–8 56

Contents

10.1.1 Contents of the kit....56
10.1.2 Installing the stacking kit....57
11 Function check....69
11.1 Check the automatic stop of the machine....69
11.2 Check the direction of rotation (only on machines with 3–phase power supply, marine installation)....69
11.3 Check the heat....69
11.4 Ready to use....70
12 Disposal information....71
12.1 Appliance recyclability and disposal....71
12.1.1 Recyclability....71
12.1.2 Procedure regarding appliance disposal and component / material recovery....71
12.2 Disposal of packing....71

The manufacturer reserves the right to make changes to design and component specifications.

1 Safety Precautions

- Servicing shall be carried out only by authorized personnel.
- Only authorized spare parts, accessories and consumables shall be used.
- The machine is not to be used if industrial chemicals have been used for cleaning.
- Do not dry unwashed items in the machine.
- WARNING: Items that have been soiled with substances such as hair care products, cooking oil, acetone, alcohol, petrol, kerosene, spot removers, turpentine, waxes and wax removers shall be cleaned sufficiently to remove the contaminant before being tumble dried. When washing such soiled items ensure the use of detergent as specified by the detergent manufacturer and select the highest suitable temperature. If in doubt, wash the items several times.
- Items such as foam rubber (latex foam), shower caps, waterproof textiles, rubber backed articles and clothes or pillows fitted with foam rubber pads should not be dried in the machine.
- Fabric softeners or similar products should be used as specified by the fabric softener instructions.
- The final part of a drying cycle occurs without heat (cool down cycle) to ensure that the items are left at a temperature that ensures that the items will not be damaged.
- Remove all objects from pockets such as lighters and matches.
- WARNING. Never stop the machine before the end of the drying cycle unless all items are quickly removed and spread out so that the heat is dissipated.
- Adequate ventilation has to be provided to avoid the back flow of gases into the room for appliances burning other fuels, including open fires.
- Exhaust air must not be discharged into a flue which is used for exhausting fumes from appliances burning gas or other fuels.
- The machine must not be installed behind a lockable door, a sliding door or a door with a hinge on the opposite side to that of the machine in such a way that a full opening of the machine is restricted.
- If the machine has a lint trap this has to be cleaned frequently.
- The lint must not be accumulated around the machine.
- DO NOT MODIFY THIS APPLIANCE.
- When performing service or replacing parts, the power must be disconnected.
- When the power is disconnected, the operator must see that the machine is disconnected (that the plug is removed and remains removed) from any point to which he has access. If this is not possible, due to the construction or installation of the machine, a disconnection with a locking system in the isolated position shall be provided.
- In accordance with the wiring rules: mount a multi-pole switch prior to the machine to facilitate installation and service operations.
- WARNING: The appliance must not be supplied through an external switching device, such as a timer, or connected to a circuit that is regularly switched on and off by a utility.
- If different rated voltages or different rated frequencies (separated by a /) are stated at the machine data plate, instructions for adjusting the appliance for operation at the required rated voltage or rated frequency are stated in the installation manual.
- Stationary appliances not fitted with means for disconnection from the supply mains having a contact separation in all poles that provide full disconnection under

overvoltage category III, means for disconnection must be incorporated in the fixed wiring in accordance with the wiring rules.

- The openings in the base, shall not be obstructed by a carpet.
- Oil-affected items can ignite spontaneously, especially when exposed to heat sources such as in a tumble dryer. The items become warm, causing an oxidation reaction in the oil. Oxidation creates heat. If the heat cannot escape, the items can become hot enough to catch fire. Piling, stacking or storing oil-affected items can prevent heat from escaping and so create a fire hazard.
- Maximum mass of dry cloth: 8.0 kg (for gas heated tumble dryers).
- Maximum mass of dry cloth: 9.0 kg (for heat pump and electric heated tumble dryers).
- A-weighted emission sound pressure level at working stations: 70 dB(A).
- The tumble dryer can be placed on top of a washer extractor or another tumble dryer (WP7–6, WP7–7, WP7–8, TD7–8).
- Additional requirements for the following countries; AT, BE, BG, HR, CY, CZ, DK, EE, FI, FR, DE, GR, HU, IS, IE, IT, LV, LT, LU, MT, NL, NO, PL, PT, RO, SK, SI, ES, SE, CH, TR, UK:
  - The appliance can be used in public areas.
  - This appliance can be used by children aged from 8 years and above and persons with reduced physical, sensory or mental capabilities or lack of experience and knowledge if they have been given supervision or instruction concerning use of the appliance in a safe way and understand the hazards involved. Children shall not play with the appliance. Cleaning and user maintenance shall not be made by children without supervision.
  - Children of less than 3 years should be kept away unless continuously supervised.
- Additional requirements for other countries:
  - This appliance is not intended for use by persons (including children) with reduced physical, sensory or mental capabilities, or lack of experience and knowledge, unless they have been given supervision or instruction concerning use of the appliance by a person responsible for their safety. Children should be supervised to ensure that they do not play with the appliance.

1.1 Additional safety precautions for gas heated tumble dryer

- Before installation, check that the local distribution conditions, nature of gas and pressure and the adjustment of the appliance are compatible.
- The machine is not to be installed in rooms containing cleaning machines with perchloroethylene, TRICHLOROETHYLENE or CHLOROFLUOROCONTAINING HYDROCARBONS as cleaning agents.
- NOTE: it is pointed out that the connection and commissioning of appliances complying with this standard are subject to observance of the installation regulations in force in the countries where these appliances are marketed.
- Connection to the appliance shall be made with a flexible hose suitable for the appliance category in accordance with national installation regulations of the country of destination and that in case of doubt the installer shall contact the supplier.
- The appliance should be installed on non-flammable materials for the floor, worktop and/or wall close to the appliance if required.
- If you can smell gas:
  - Do not switch on any equipment
  - Do not use electrical switches
  - Do not use telephones in the building
  - Evacuate the room, building or area
  - Contact the person responsible for the machine

1.2 General information

Conditions for storage and transportation of the appliance should fulfil a temperature between -20°C / + 70°C and max Humidity of 95% RH.

In order to prevent damage to the electronics (and other parts) that may occur as the result of condensation, the machine should be placed in room temperature for 24 hours before being used for the first time.

Electric power supply should follow:

- Max range for each country rated voltage: -15% / +10%.
- Max range for each country rated frequency: ± 3 Hz.
- Dips/Interruption: 5 Dips/day (100% voltage lost, with 3-4 minutes duration).

A stable power supply is always the best. Fluctuations gives stress and additional load on all electric and electronic components.

1.3 Commercial use only

The machine/machines covered by this manual is/are made for commercial and industrial use only.

1.4 Copyright

This manual is intended solely for consultation by the operator and can only be given to third parties with the permission of Electrolux Professional AB company.

1.5 Ergonomics certification

The human body is designed for movement and activity but physical stress injuries as a result of static and repetitive movements or unfavorable working postures may occur.

The ergonomic features of your product, the ones which may influence your physical and cognitive interaction with it, have been assessed and certified.

A product which exhibits ergonomic features, in fact, shall fulfil specific ergonomic requirements, belonging to three different areas: Polytechnic, Biomedical and Psychosocial (usability and satisfaction).

For each of these areas, specific tests with real users have been performed. The product was therefore compliant with the ergonomic acceptability criteria requested by the standards.

In case several machines are managed by the same operator the repetitive movements will increase and as a consequence of this the related biomechanical risk will increase exponentially.

The possible postural risks are the interaction with the door handle both in case the machine is placed directly on the floor without a base and in case the machine is placed on top of a washing machine.

Follow the below recommendations to avoid, as much as possible, operators acquiring bodily injury.

- Place the machine on a base instead of directly on the floor so that the operator does not need to bend his/her back unnecessarily when loading and unloading.
  Minimum suggested height of bases is 300 mm.
- Move the control panel to the lower position in case the machine is placed on top of a washing machine.
- Make sure there are suitable trolleys or baskets for loading, unloading and transportation.
- Organize job rotation in the working place in the case several machines are managed by the same operator.

1.6 Symbols

	Caution
	Caution, hot surface
	Caution, high voltage
	Warning, risk of fire / flammable material
	Danger, crush hazard
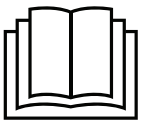	Read the instructions before using the machine

2 Warranty terms and exclusions

If the purchase of this product includes warranty coverage, warranty is provided in line with local regulations and subject to the product being installed and used for the purposes as designed, and as described within the appropriate equipment documentation.

Warranty will be applicable where the customer has used only genuine spare parts and has performed maintenance in accordance with Electrolux Professional AB user and maintenance documentation made available in paper or electronic format.

Electrolux Professional AB strongly recommends using Electrolux Professional AB approved cleaning, rinse and descaling agents to obtain optimal results and maintain product efficiency over time.

The Electrolux Professional AB warranty does not cover:

- service trips cost to deliver and pick up the product;
- installation;
- training on how to use/operate;
- replacement (and/or supply) of wear and tear parts unless resulting from defects in materials or workmanship reported within one (1) week from the failure;
- correction of external wiring;
- correction of unauthorized repairs as well as any damages, failures and inefficiencies caused by and/or resulting from;
  - insufficient and/or abnormal capacity of the electrical systems (current/voltage/frequency, including spikes and/or outages);
  - inadequate or interrupted water supply, steam, air, gas (including impurities and/or other that does not comply with the technical requirements for each appliance);
  - plumbing parts, components or consumable cleaning products that are not approved by the manufacturer;
  - customer’s negligence, misuse, abuse and/or non-compliance with the use and care instructions detailed within the appropriate equipment documentation;
  - improper or poor: installation, repair, maintenance (including tampering, modifications and repairs carried out by third parties not authorized third parties) and modification of safety systems;
  - Use of non-original components (e.g.: consumables, wear and tear, or spare parts);
  - environment conditions provoking thermal (e.g. overheating/freezing) or chemical (e.g. corrosion/oxidation) stress;
  - foreign objects placed in- or connected to- the product;
  - accidents or force majeure;
  - transportation and handling, including scratches, dents, chips, and/or other damage to the finish of the product, unless such damage results from defects in materials or workmanship and is reported within one (1) week of delivery unless otherwise agreed;
- product with original serial numbers that have been removed, altered or cannot be readily determined;
- replacement of light bulbs, filters or any consumable parts;
- any accessories and software not approved or specified by Electrolux Professional AB.

Warranty does not include scheduled maintenance activities (including the parts required for it) or the supply of cleaning agents unless specifically covered within any local agreement, subject to local terms and conditions.

Check on Electrolux Professional AB website the list of authorized customer care.

3 Technical data

3.1 Electric heated machines

3.1.1 Drawing

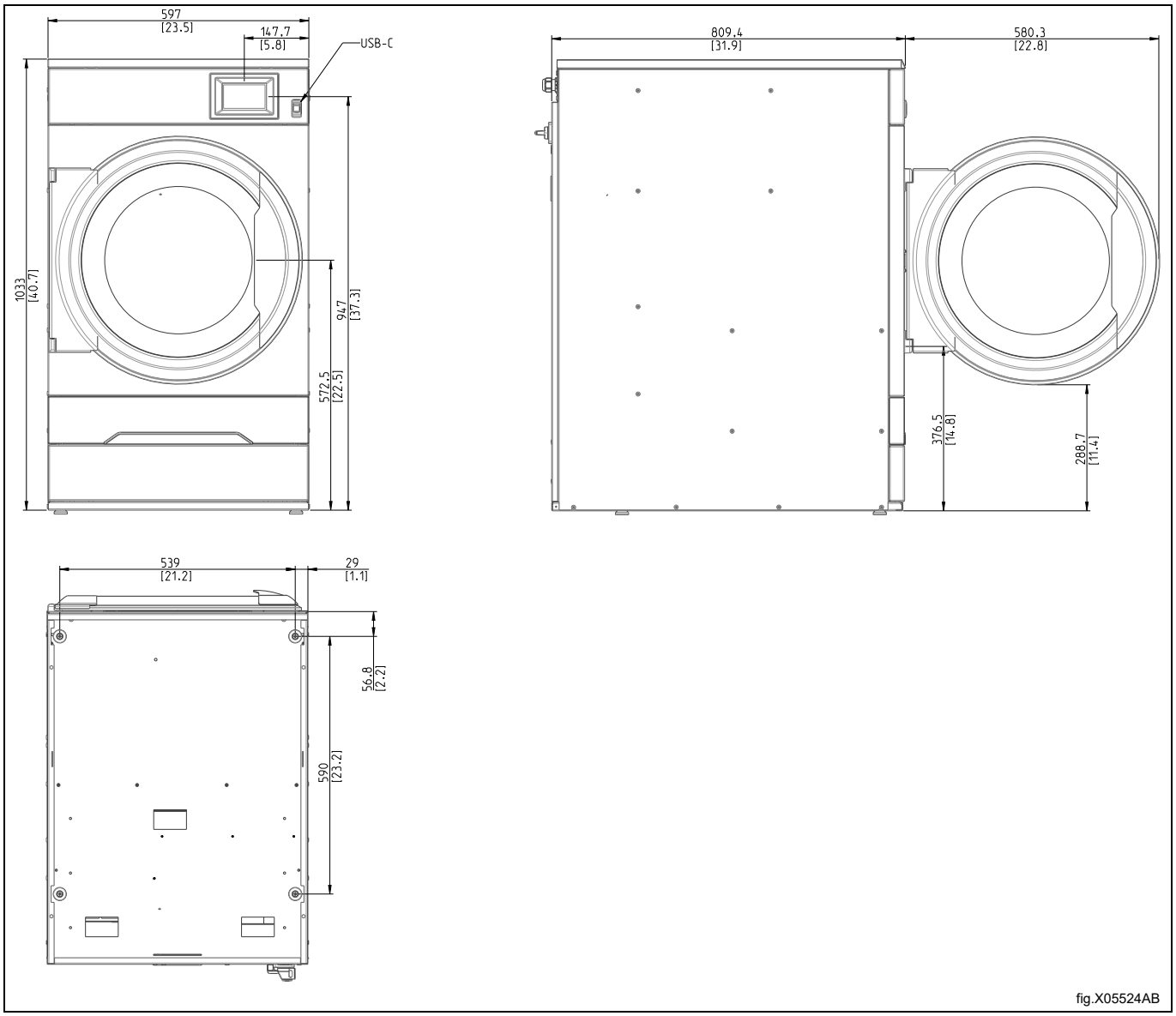

fig.X05524AB

3.1.2 Technical data

Weight, net	kg	97
Drum volume	liters	135
Drum diameter	mm	575
Drum depth	mm	500
Drum speed, medium load	rpm	53
Rated capacity, filling factor 1:15 (Max. load)	kg	9.0
Rated capacity, filling factor 1:18	kg	7.5
Rated capacity, filling factor 1:22 (Recommended load)	kg	6.1
Heating: Electricity	kW	3.0
	kW	4.5
	kW	6.0
Optimum air flow, 3.0/4.5 kW	m^3/h	130
Optimum air flow, 6.0 kW	m^3/h	155
Optimum static back pressure, 3.0/4.5 kW	Pa	350
Maximum static back pressure, 3.0/4.5 kW	Pa	355
Optimum static back pressure, 6.0 kW	Pa	300
Maximum static back pressure, 6.0 kW	Pa	310
Sound power/pressure level at drying[1]	dB(A)	63/48
Heat emission of installed power, max	%	15
Standard conditions: Ambient operating temperature, with a max relative humidity Ambient operating temperature, with a max relative humidity	 °C /%RH °C /%RH	 +1— +32°C / 95% +32— +40°C / 60%
Harsh conditions:[2] Ambient operating temperature, with a max relative humidity	 °C /%RH	 +40— +45°C / 60%

1. Sound power levels measured according to ISO 60704.
2. Harsh conditions will in a not insignificant manner affect the machine's function, lifetime, performance, etc.

3.1.3 Connections

Air outlet	⌀ mm	125

3.2 Gas heated machines

3.2.1 Drawing

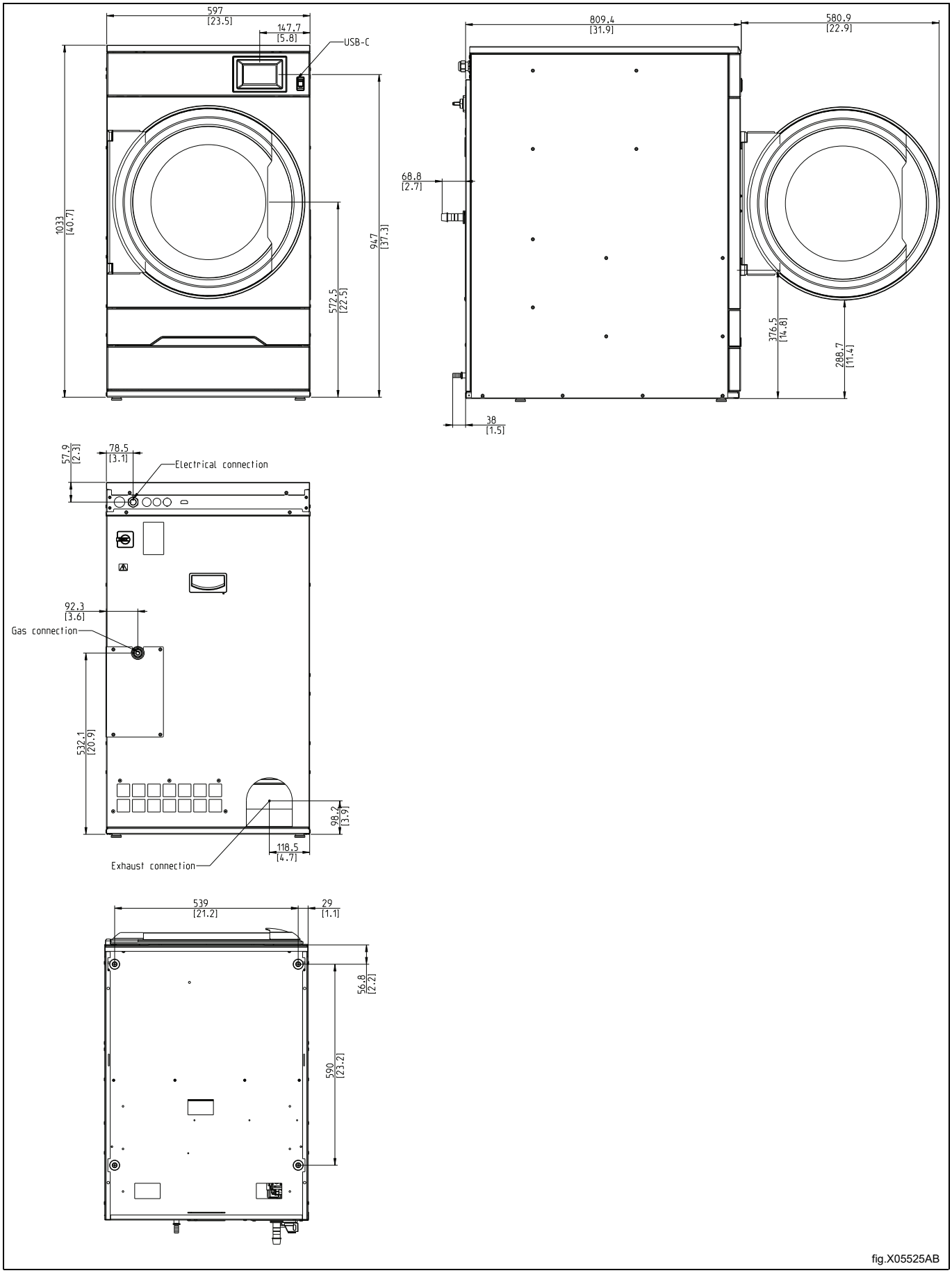

fig.X05525AB

3.2.2 Technical data

Weight, net	kg	97
Drum volume	liters	135
Drum diameter	mm	575
Drum depth	mm	500
Drum speed, medium load	rpm	53
Rated capacity, filling factor 1:18 (Max. load)	kg	7.5
Rated capacity, filling factor 1:22 (Recommended load)	kg	6.1
Heating: Gas	kW	7.0
Optimum air flow	m^3/h	280
Optimum static back pressure	Pa	200
Maximum static back pressure	Pa	255
Sound power/pressure level at drying[1]	dB(A)	63/48
Heat emission of installed power, max	%	15
Standard conditions:		
Ambient operating temperature, with a max relative humidity	°C /%RH	+1— +32°C / 95%
Ambient operating temperature, with a max relative humidity	°C /%RH	+32— +40°C / 60%
Harsh conditions:[2]		
Ambient operating temperature, with a max relative humidity	°C /%RH	+40— +45°C / 60%

1. Sound power levels measured according to ISO 60704.
2. Harsh conditions will in a not insignificant manner affect the machine's function, lifetime, performance, etc.

Note!

- **The default gas appliances are built to run on natural gas (GNH) according to 2H or 2E (G20).**
- **The default gas appliance shall not be installed at an altitude above 610 m (2001 ft).**
- **To run on another gas type gas converting must be done on the machine.**
- **The gas converting accessories for other gases at altitudes below 610 m (2001 ft) are in the accessory bag.**
- **For LPG use gas qualities according to GPA Midstream Standard 2140-23.**

3.2.3 Connections

Air outlet	⌀ mm	125
Gas connection	1/2"	ISO 7/1–R1/2

3.3 Machines with heat pump

3.3.1 Drawing

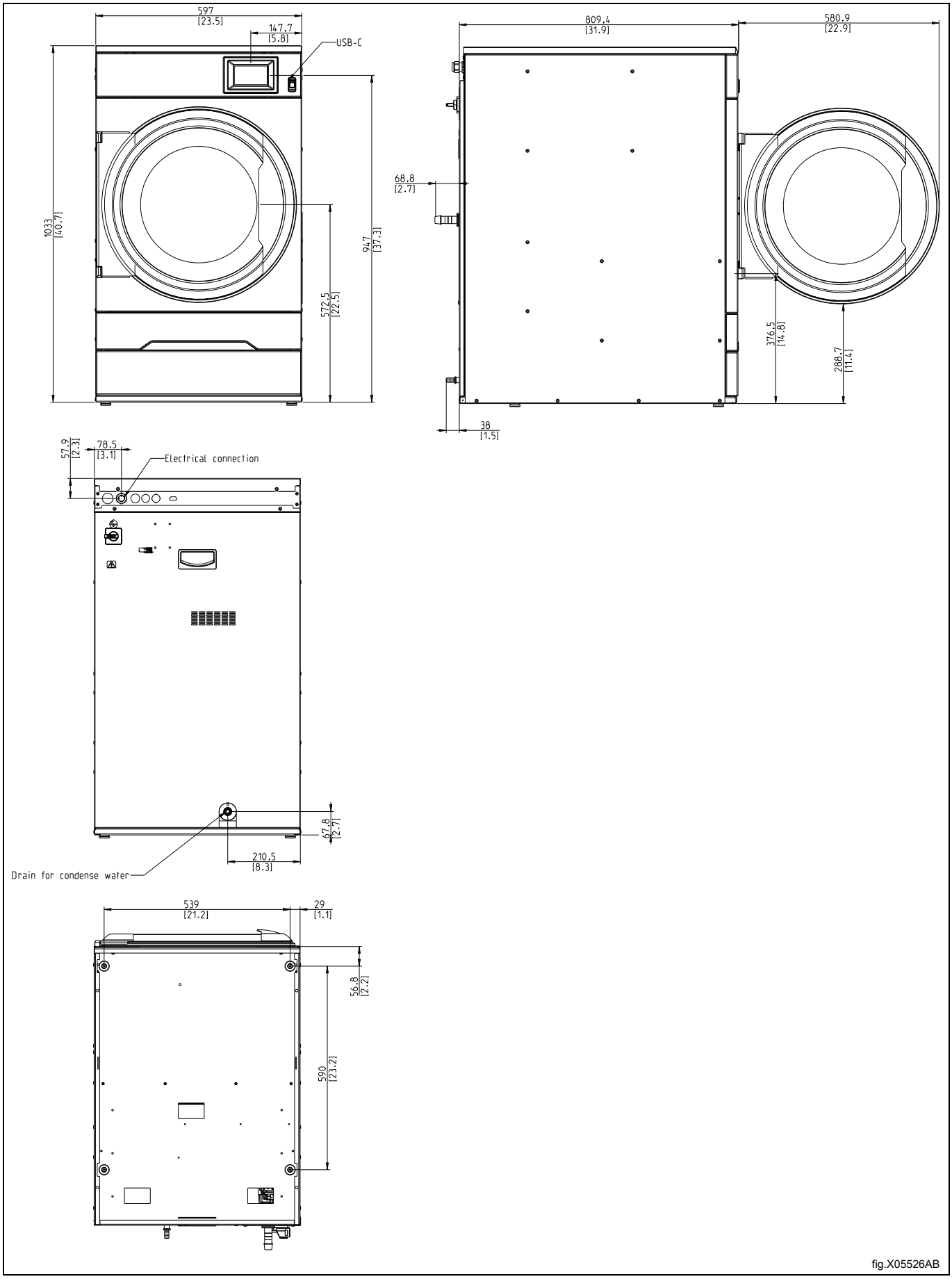

fig.X05526AB

3.3.2 Technical data

Weight, net	kg	119
Drum volume	liters	135
Drum diameter	mm	575
Drum depth	mm	500
Drum speed, medium load	rpm	53
Rated capacity, filling factor 1:15 (Max. load)	kg	9.0
Rated capacity, filling factor 1:18	kg	7.5
Rated capacity, filling factor 1:22 (Recommended load)	kg	6.1
Sound power/pressure level at drying[1]	dB(A)	63/48
Average heat emission per drying cycle used to assess ventilation need[2]	kW	0.7
Standard conditions:		
Ambient operating temperature, with a max relative humidity	°C /%RH	+10— +32 °C / 95%
Ambient operating temperature, with a max relative humidity	°C /%RH	+32— +40 °C / 60%
Harsh conditions:[3]		
Ambient operating temperature, with a max relative humidity[4]	°C /%RH	+5—+10 °C / 95%
Ambient operating temperature, with a max relative humidity	°C /%RH	+40— +45 °C / 60%

1. Sound power levels measured according to ISO 60704.
2. For assistance with dimensioning necessary ventilation needs, contact authorized ventilation technician. For sufficient ventilation all sources introducing heat need to be taken into account plus all other parameters effecting the ventilation need. Climate zone, building parameters, room size, etc.
3. Harsh conditions will in a not insignificant manner affect the machine's function, lifetime, performance, etc.
4. Down to +5 with temperature extension kit.

Heat pump

Type of refrigerant		R513A
Amount of refrigerant	kg	0.6

Fluorinated greenhouse gases

This product contains fluorinated greenhouse gases:
R513A: 0.6 kg
GWP: 631
CO_2 equivalent 0.379 t
Hermetically sealed

3.3.2.1 Connections

Pipe connection, condensed water	⌀ mm	15

4 Setup

4.1 General

The principle work flow to setup or install this machine can be simply described below.

Gas-, Electric-, Steam heating:

1. Unpacking
2. Positioning/siting, levelling or/and securing the machine.
3. Correcting the fresh air/air intake's size, exhaust duct's size and pipe(s) connections in considering a stand-alone machine or sharing exhaust duct.
4. Electric connections, connect the power supply to the machine.
5. Air flow or static back pressure adjustments in a cold empty machine in considering a stand-alone machine or sharing exhaust duct.
6. Gas connection. (For gas heated machine).
7. Function check.
8. Option functions check.

More details are described in each part of this installation manual.

Heat pump heating:

1. Unpacking
2. Positioning/siting, levelling or/and securing the machine.
3. Correcting the fresh air to compensate the heat emission of machine(s) and connect the drain(s).
4. Electric connections, connect the power supply to the machine.
5. Function check.
6. Option functions check.

More details are described in each part of this installation manual.

4.2 Unpacking

Note!

For machines with heat pump; the machine must not be laid down or tilted more than 45°. If so, this might damage the heat pump.

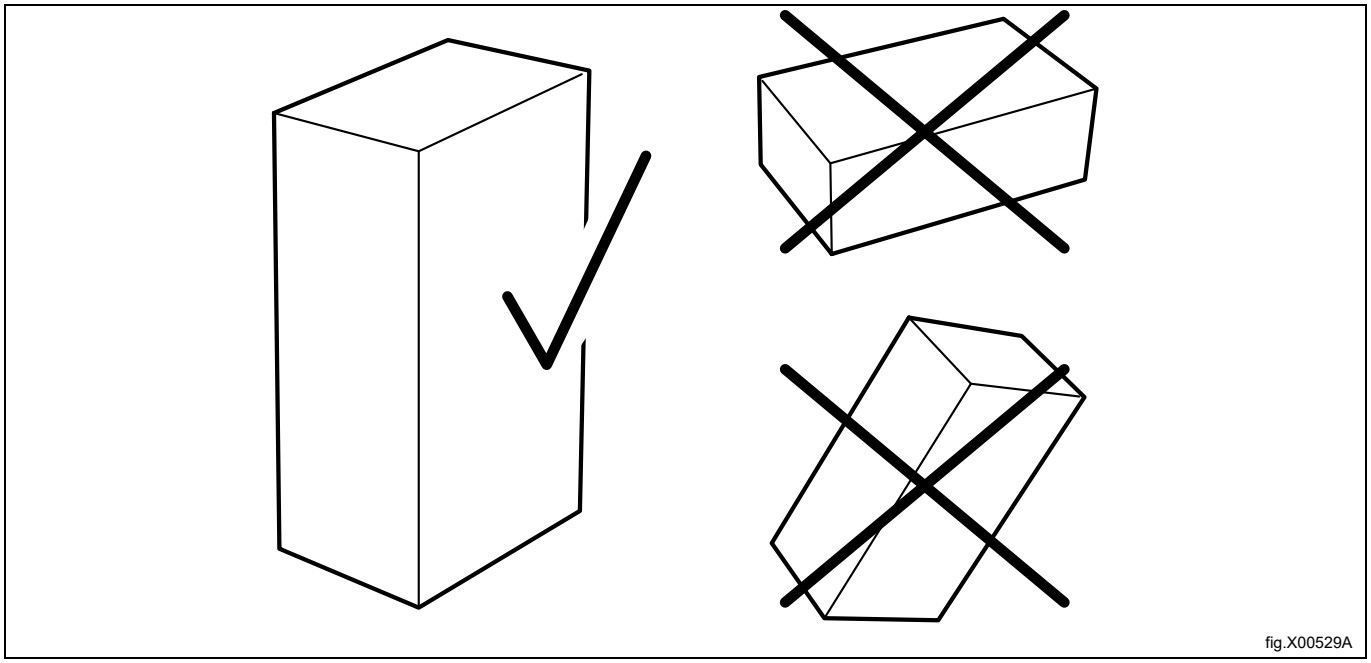

fig.X00529A

Remove the screws and the transportation bracket on each side of the machine.
Remove the machine from the pallet.

Note!
When moving the machine, handle it with care. The drum has no transport clamps.

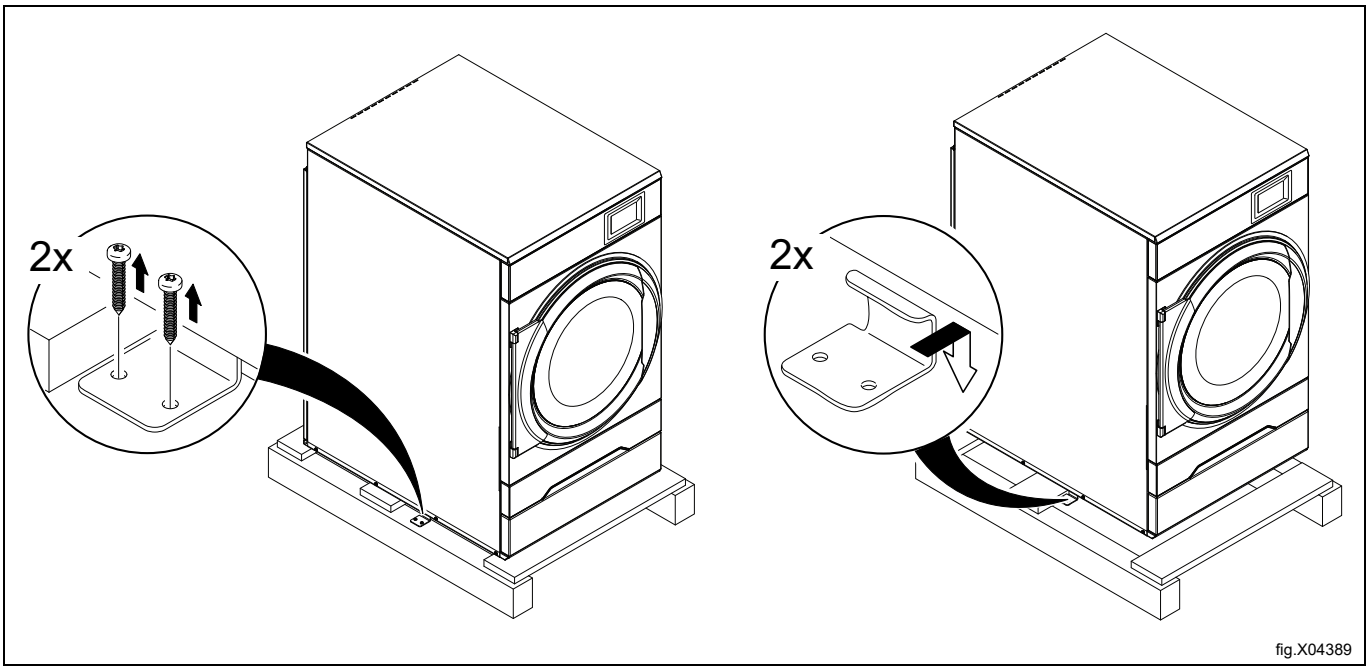

Place the machine on its final position.

4.3 Recycling instruction for packaging

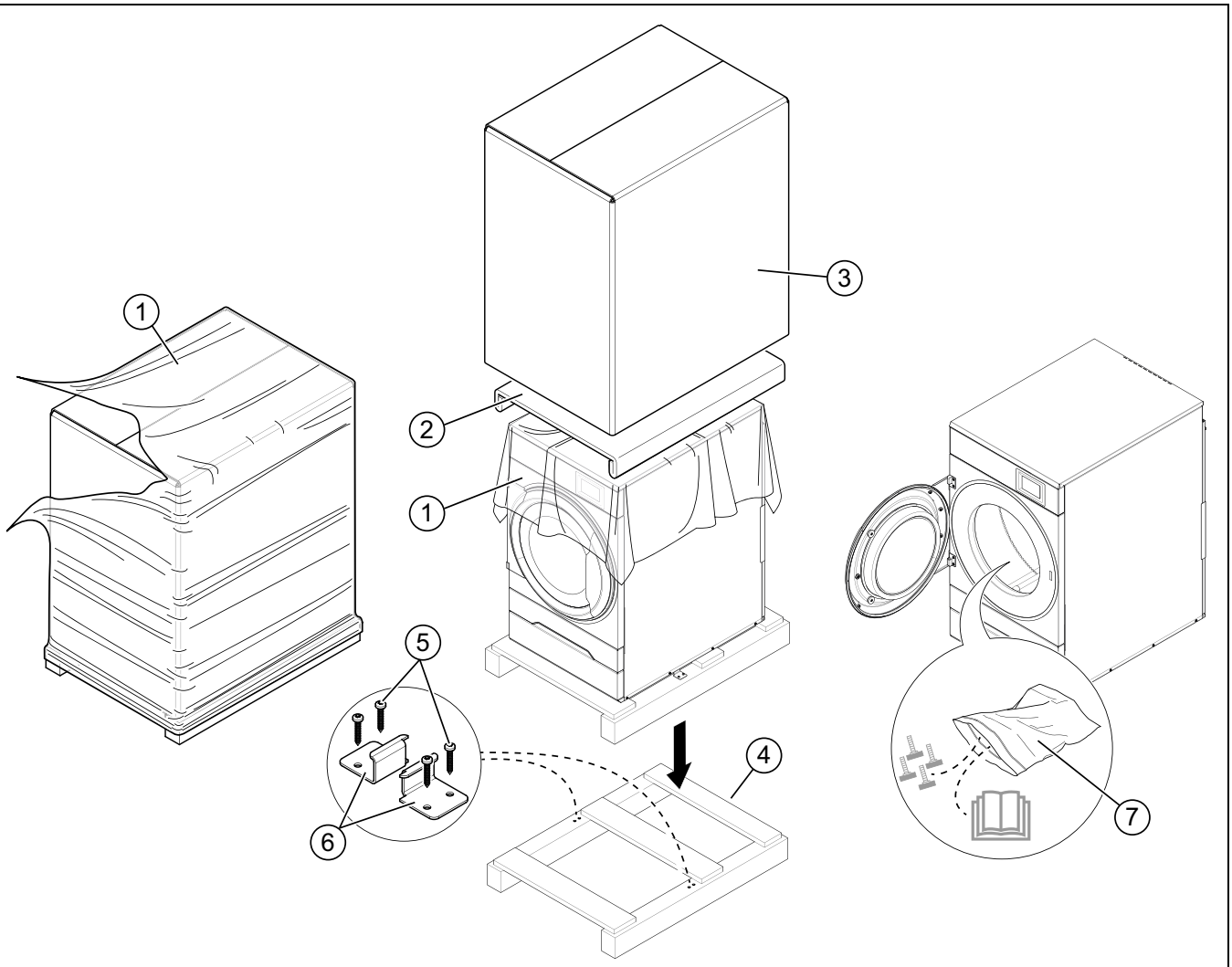

fig.X04390A

Fig.	Description	Code	Type
1	Wrapping film	LDPE 4	Plastics
2	Corner protection	PS 6	Plastics
3	Cardboard packaging	PAP 20	Paper
4	Pallet	FOR 50	Wood
5	Screw	FE 40	Steel
6	Steel Bracket	FE 40	Steel
7	Plastic bag	PET 1	Plastics

4.4 Siting

The figure shows recommended distance to walls and/or other machines.

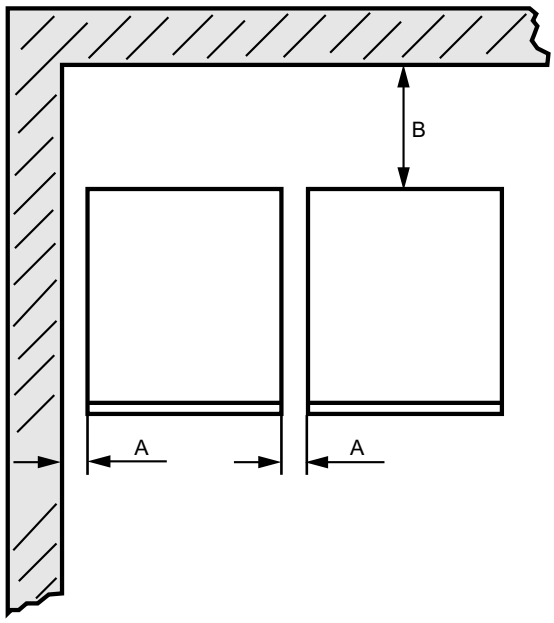

fig.X00959

A	5–500 mm (Min. 5 mm)
B	500 mm (Min. 200 mm)

Note!

The machine should be positioned so that there will be enough space for working, both for the user and service personnel.

Respecting the given recommendations will provide easy access for maintenance and service operations.

In case of space limitations, it is possible to install machines without respecting to the given recommendations. If so, keep in mind that it might be necessary to disconnect and move other machines to be able to reach and perform service on affected machine.

4.5 Drain connection (only for machines with heat pump)

Connect a drain hose to the pipe (A) on the heat pump unit.

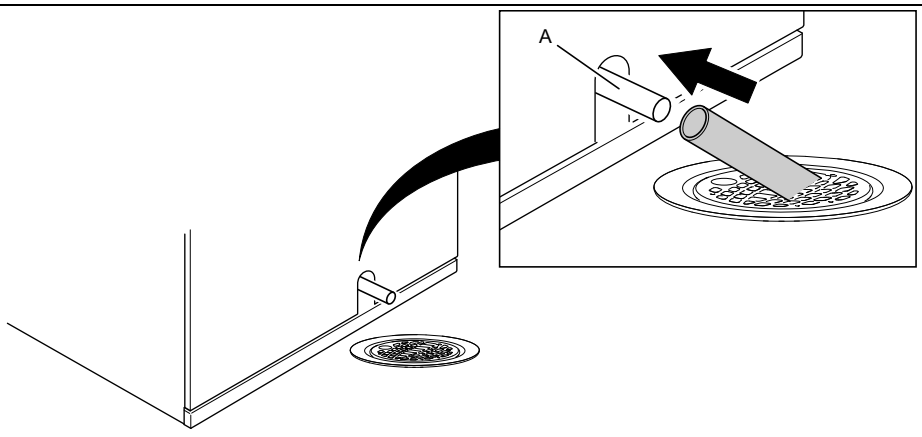

fig.X00695

Note!
The drain hose (A) must be positioned over the water level in the floor drain.
The drain must be lower than the drain outlet from the heat pump unit. If not the water will flow back into the machine. Adjust with the feet.
The hose shall hang in a gentle arc.

4.6 Mechanical installation

Remove the filter drawer.

Loosen the five screws and demount the bracket.

Remove the lower front panel.

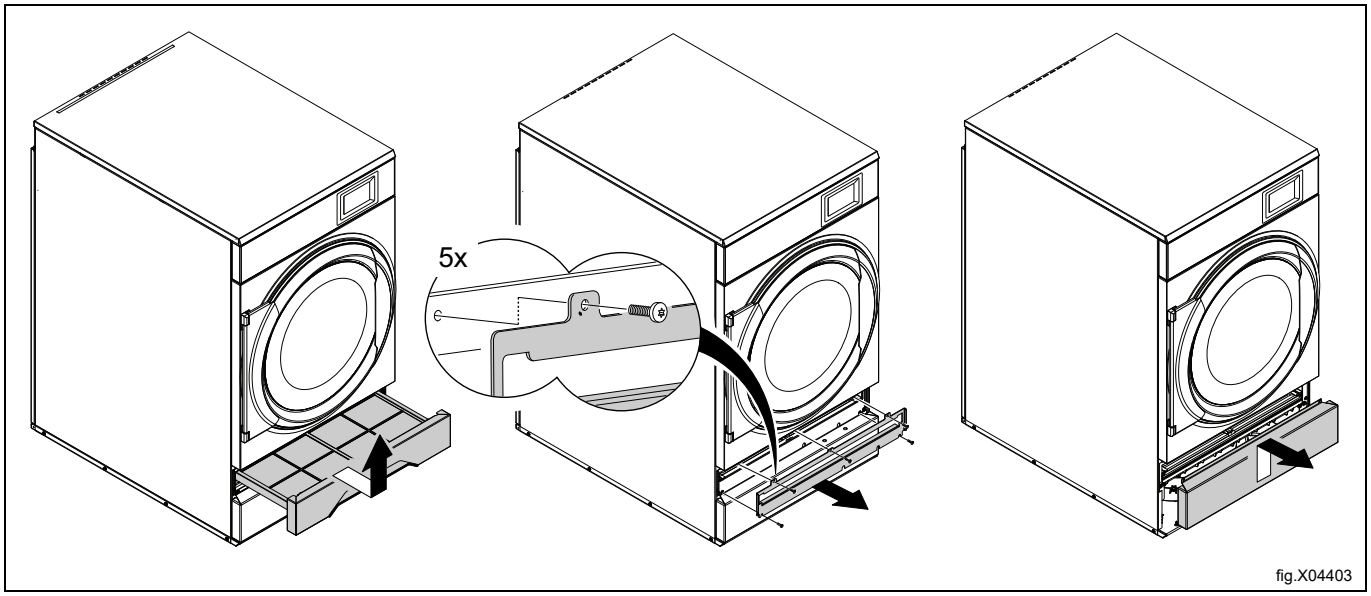

Level the machine with the feet of the machine. The maximum height adjustment of the feet is 14 mm.

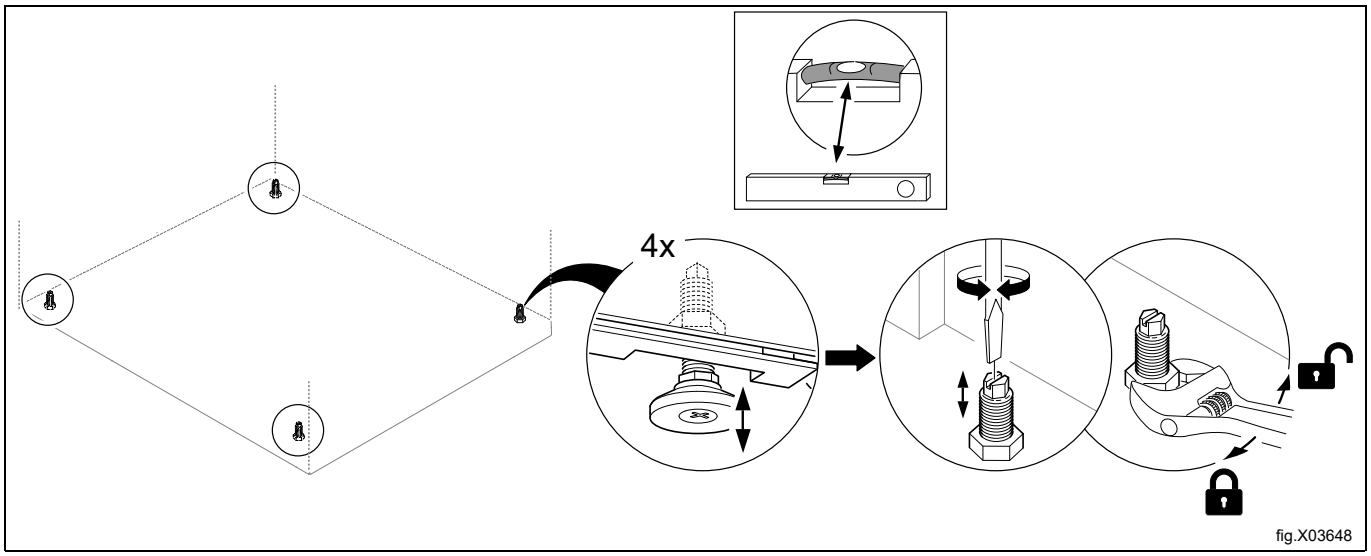

Remount the panels.

5 Marine installation

To ensure steadiness of the machine it is important to fasten the machine to the foundation.

Fasten four fittings to the foundation using four x M10 set screws.

Note!

The four fittings are not supplied with the machine and must be ordered as kit No. 487193544.

Fasten the machine to the fittings.

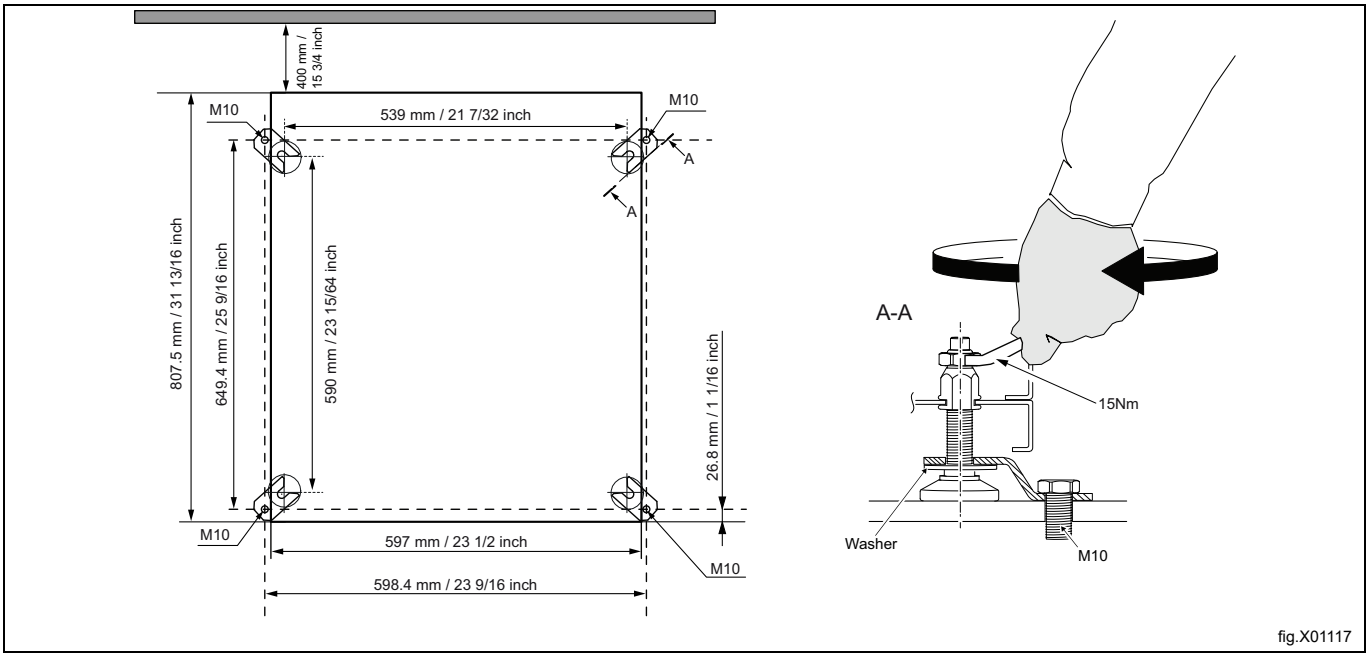

Note!

Marine installation is not applicable for gas heated machines or machines with heat pump.

6 Evacuation system

6.1 Air principle

Note!
It is very important that the machine gets enough fresh air in order to get the best drying result.

6.1.1 Electric- and Gas heated machines

The fan creates low pressure in the machine, drawing air into the drum via the heating unit. The heated air passes through the garments and the drum holes and flows out through the filter positioned below the drum. The air is then evacuated through the fan and exhaust system.

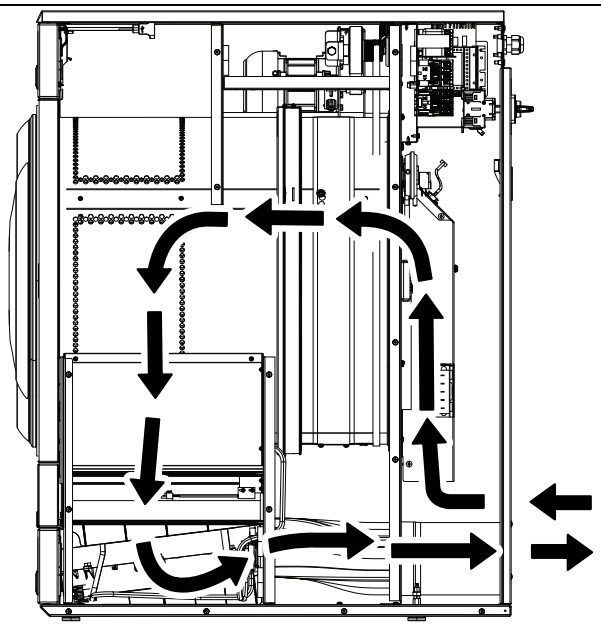

fig.X04404

6.1.2 Machines with heat pump

The fan creates air flow in the machine, drawing air into the drum via the heating unit. The heated air passes through the garments and the drum holes and flows out through the first filter drawer and continues through the second special filter just underneath. The special filter is necessary in machines with heat pump in order to protect the heat pump to get clogged by lint. When the air has passed the two filters it recirculates back into the drum.

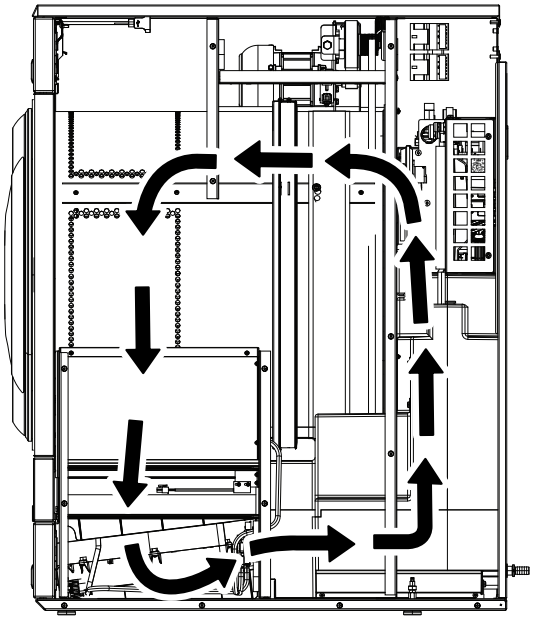

fig.X04405

6.1.2.1 Ventilating the room

When the machine is in operation, the room temperature increases. Due to this, the room must have sufficient ventilation.

All sources introducing heat into the same room requires to be considered when dimensioning the ventilation. Heat sources could for example be: more tumble dryers, drying cabinets, washers, ironers, radiators, etc. The combination of several sources for heat introduction leads to an increased need for ventilation flow. Other factors may also influence the needed ventilation flow, such as climate zone, building parameters, room size, etc. For assistance with dimensioning necessary ventilation needs, contact authorized ventilation technician.

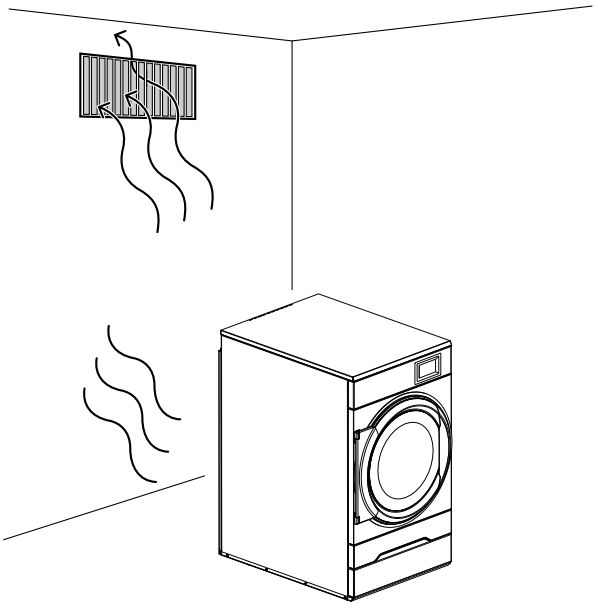

fig.X04406

6.2 Fresh air

For maximum efficiency and the shortest possible drying time, it is important to ensure that fresh air is able to enter the room from the outside in the same volume as that is blown out of the room

To avoid draught in the room it is important to place the air inlet behind the machine.

Provisions for adequate air supply:

- The area of the air inlet opening is recommended to be five times the size of the exhaust pipe area. The area of the inlet opening is the area through which the air can flow without resistance from the grating/slatted cover.

The resistance in the grating/slats on the air inlet cover panel should not exceed 10 Pa (0.1 mbar).

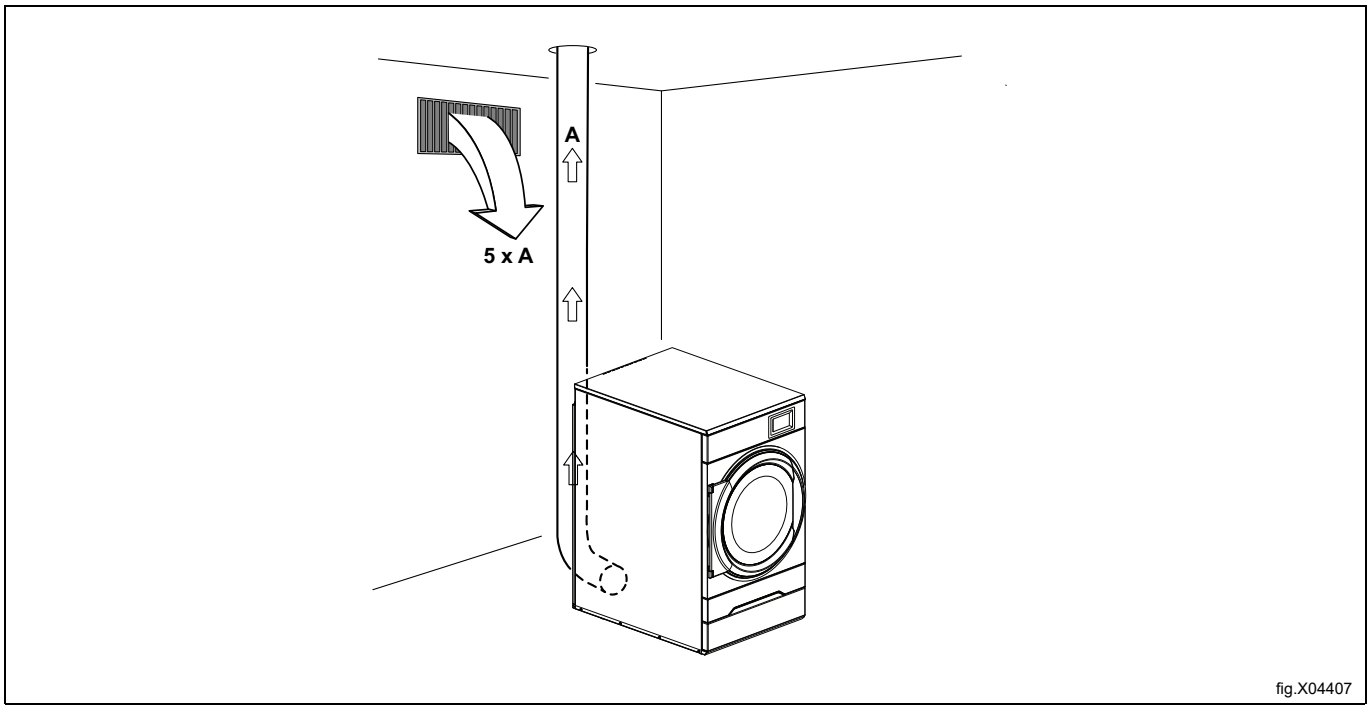

fig.X04407

Note!

Gratings/slatted covers often block half of the total fresh air vent area. Remember to take this into account.

6.3 Exhaust duct

- Only rigid or flexible metal duct should be used for exhausting.
- Plastic ducting is not to be used.
- Recommended material for exhaust is galvanized steel.
- The duct is not to be assembled with screws or other fastening means that extend into the duct and catch lint, instead use for example clamps and high temperature silicone.
- The exhaust air should not be vented into a wall, a ceiling, or a concealed space of building.
- The exhaust duct must lead clear of the building as condensation may cause frost damage to the building.
- The exhaust duct must lead to the outdoors.
- The exhaust duct must be placed in such a way that it is protected on the outside from for example impacts or water ingress.
- The exhaust duct must be smooth on the inside (low air resistance).
- The exhaust duct must have gentle bends.

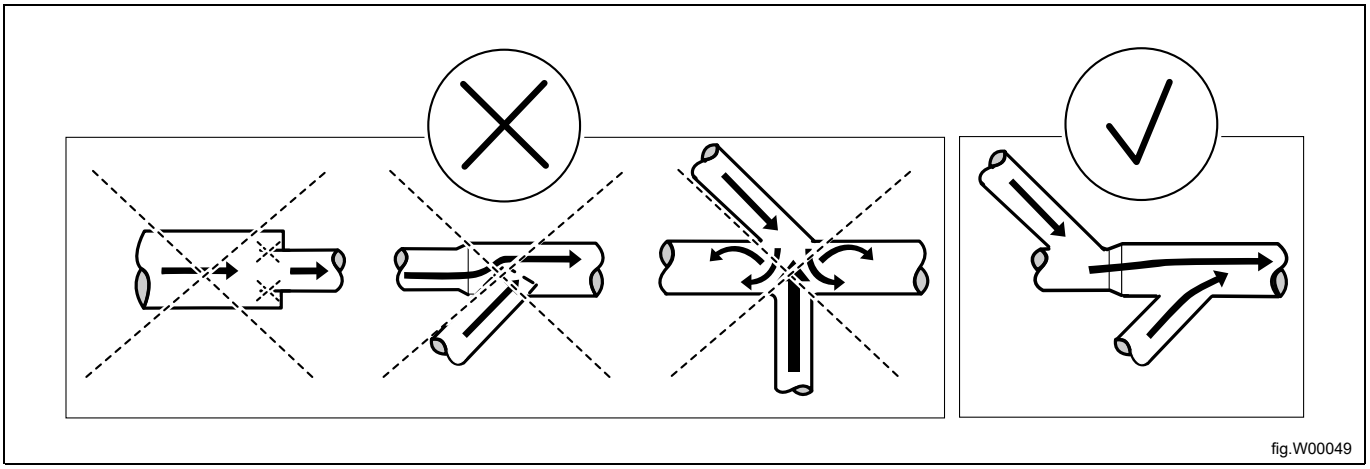

fig.W00049

6.4 Shared exhaust duct

It is recommended that each machine is connected to a separate exhaust duct.

When several machines shall use the same exhaust duct the exhaust duct must increase after each machine. The recommended diameter increase progression is the one in the table.

If several machines are installed on the same exhaust pipe, it is recommended to adjust the airflow on the machines when all machines are started and running a program with no heat.

Please consider that unnecessarily large ducts create issues with the draught.

The exhaust duct must have a non-return flap after each dryer.

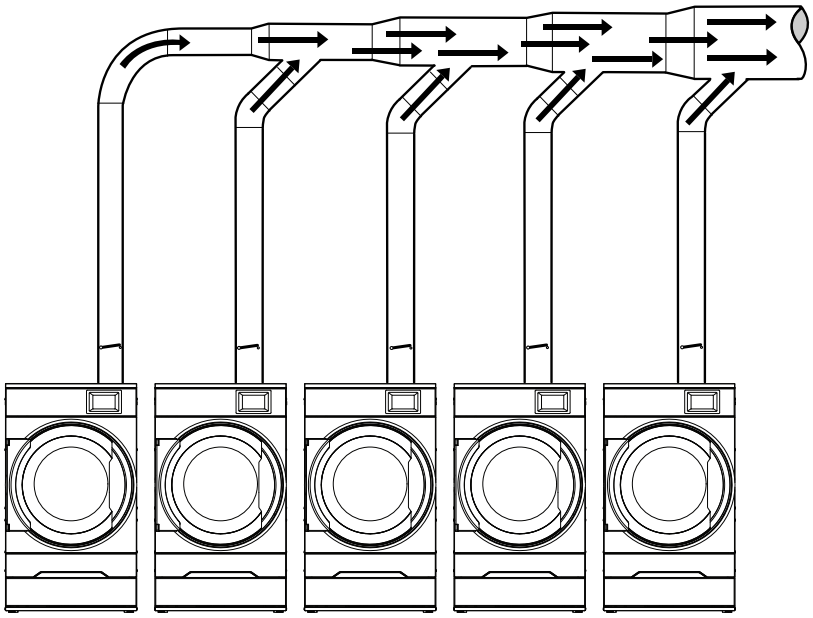

fig.X04408

Number of machines		1	2	3	4	5	6	7	8	9	10
Exhaust duct	⌀ mm	125	200	250	250	315	315	400	400	400	400
Recommended area of fresh air intake	m^2	0.06	0.16	0.25	0.25	0.39	0.39	0.63	0.63	0.63	0.63
Minimum area of fresh air intake	m^2	0.05	0.10	0.15	0.19	0.24	0.29	0.34	0.39	0.44	0.49

The exhaust duct diameter must not be reduced.

6.5 Exhaust dimensioning

It is important that the machine has correct air volume compared to each machines power.

If the air flow is smaller or larger this will result in a longer drying period or will lower the performance of the machine.

If the outlet pipe is long or the ventilation is not properly designed it is recommended to clean the outlet pipes periodically. Usually, longer ducts need more frequent cleaning. If the outlet pipe has too high back pressure it is recommended to install an exhaust fan.

The exhaust pipes shall be short in order for the machine to work in the best way.

All cover panels must be mounted in order for the machine to work in the best way.

The exhaust duct must be designed so the static back pressure measured in the hole for the NTC-sensor does not exceed the maximum allowable back pressure specified in “Technical data”.

6.6 Adjusting the air flow (not valid for tumble dryers with heat pump)

Adjusting the air flow may only be carried out by authorized personnel.

Note!

For airflow adjustment ability, a damper need to be incorporated into the exhaust piping system.

It is important that the machine has the correct air flow compared to each machines heat input. If the air flow is below the minimum, the machine will be forced to switch the heating off which will result in longer drying time.

An air flow above needed is unnecessary and can result in a cold laundry room and noise from the piping and outlet. In extreme causes this can result in longer drying time.

- Demount the rear panel.

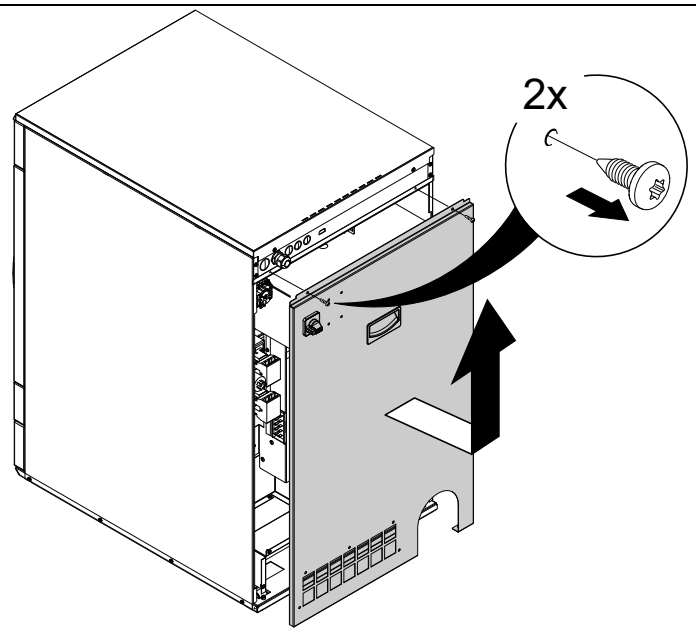

fig.X04409

- Insert the measuring instrument (manometer) in the hole (A). Make sure the connection is tight to prevent air leakage.

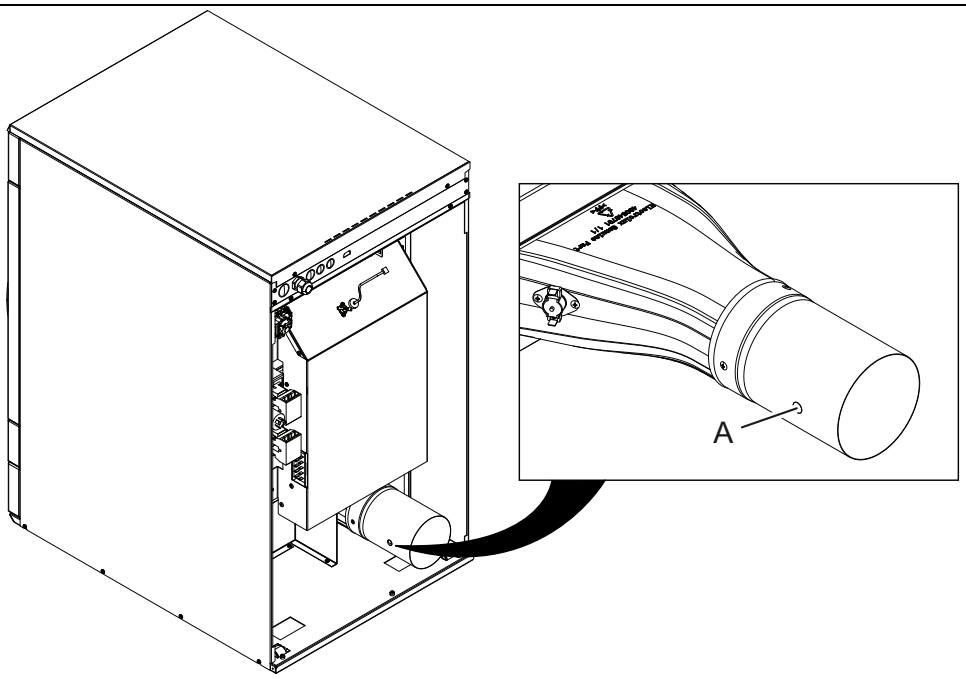

fig.X04410

- Measure when the machine is running with a program without heat and with an empty drum.
- To be able to adjust the air flow for an optimal drying process it is recommended to install a damper in the ducting system. By opening and closing the damper the pressure in the hole (A) is either lowered or raised, thus the flow is raised or lowered.

6.6.1 Diagram with pressure drop curve

The grey area (A) illustrates the optimal working area.

A	Working area
B	Optimum airflow cold empty machine
C	Static back pressure, Pa
D	Air flow m³/h

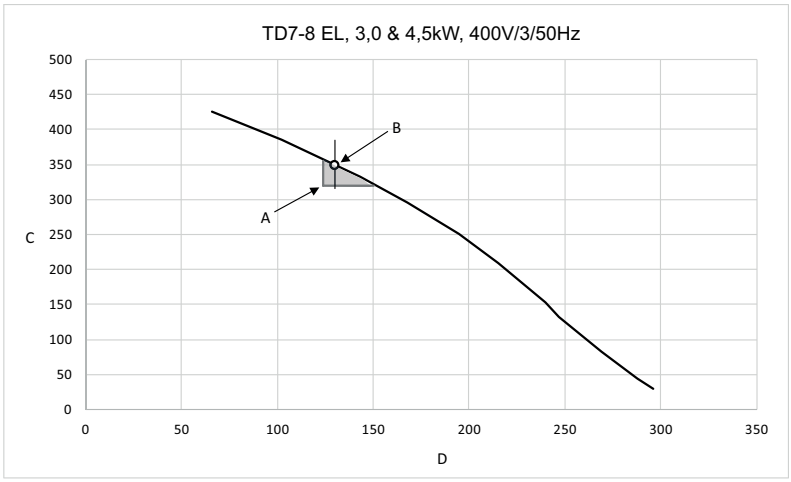

fig.X04528

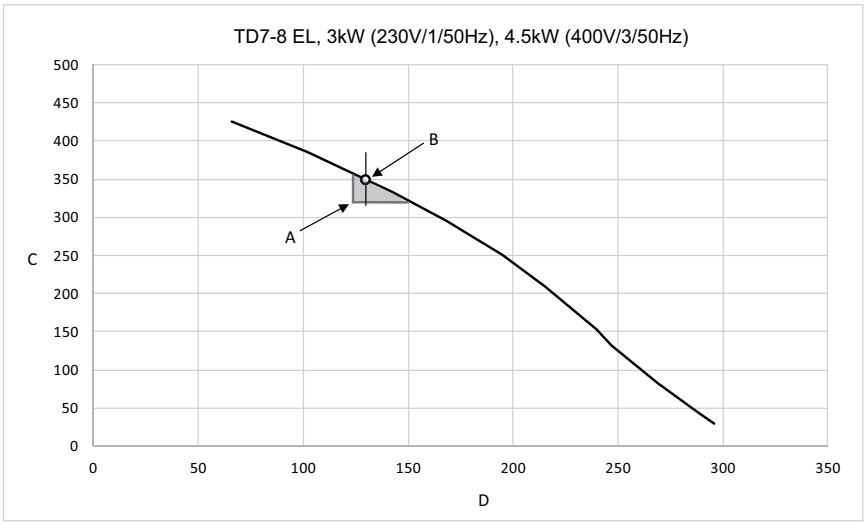

fig.X04529

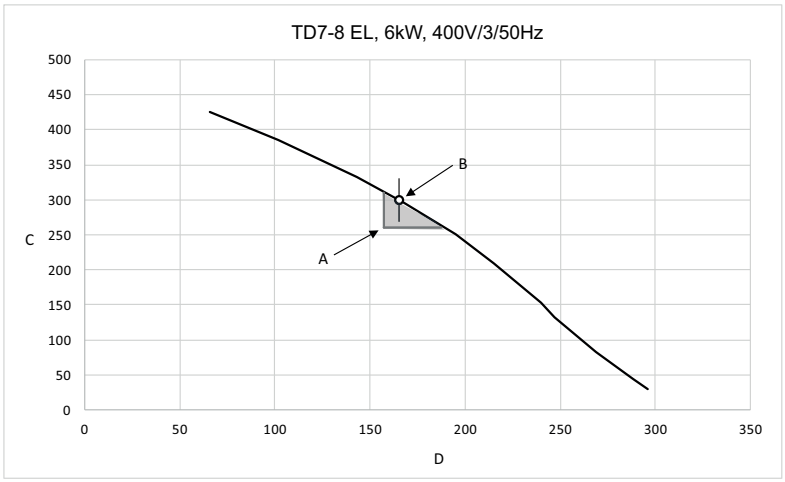

fig.X04530

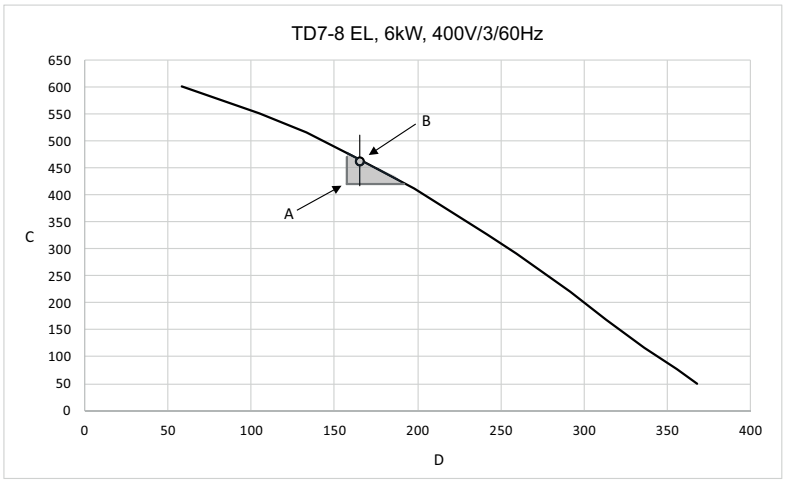

fig.X04531

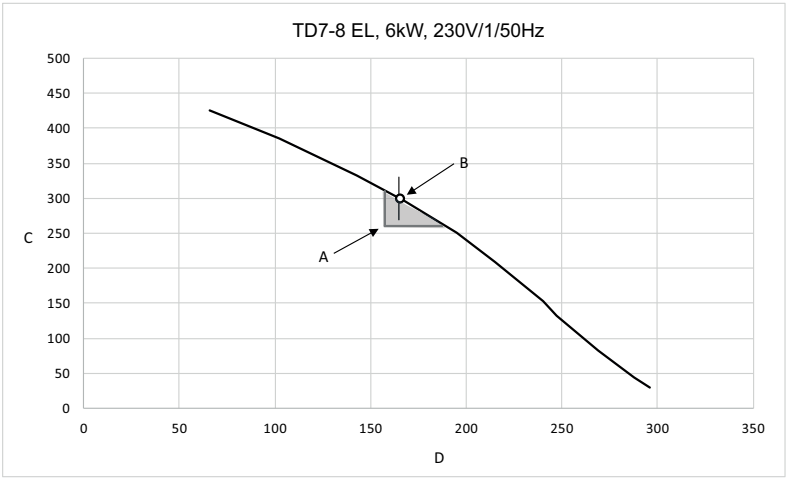

fig.X04532

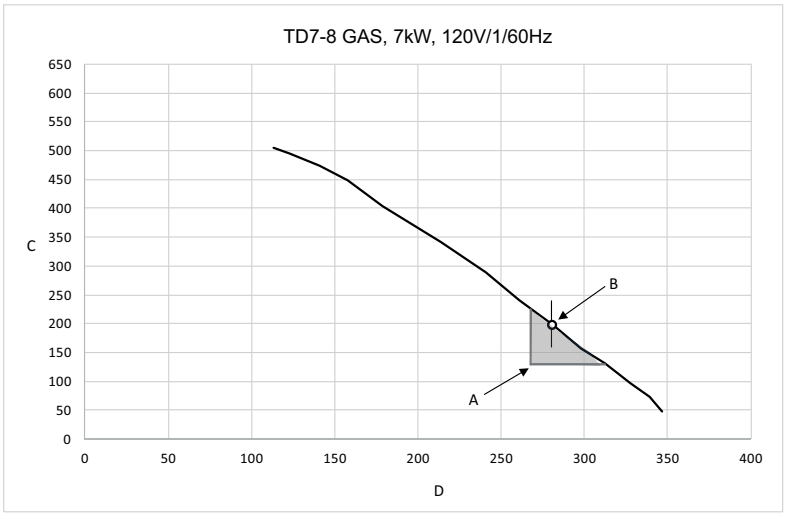

fig.X04533

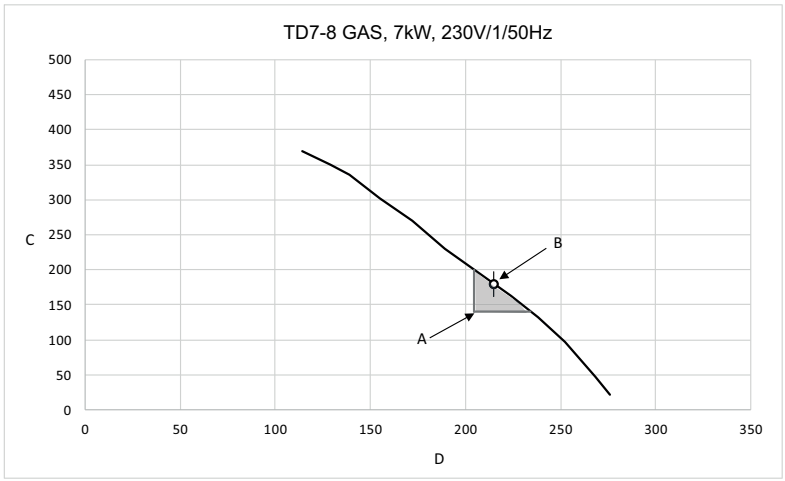

fig.X04534

6.6.2 Alternative measuring method

Adjusting the air flow may only be carried out by authorized personnel.

- Use a home made U tube manometer, a hose (max. outer ⌀ 10 mm and min. outer ⌀ 5 mm), with water. Insert one end of the hose in the hole (A) (after the plug has been removed), hold the hose according to the picture so that the water is in level.
- Start the machine and measure the difference between the water in one of the hose ends with the other.
  1 mm = 10 Pa.

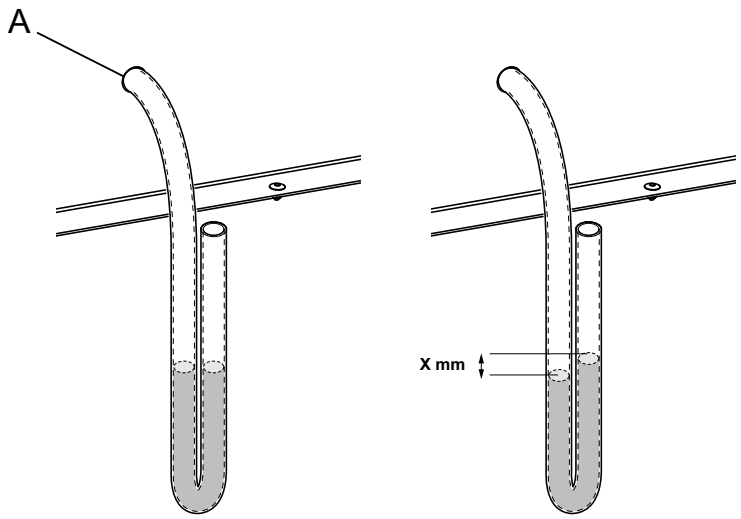

fig.7528B

Note!
When the air flow is adjusted remount the plug in the hole (A) and lock the damper in the new position.

- Remount the rear panel.

7 Electrical connection

7.1 Electrical installation




The electrical installation may only be carried out by qualified personnel.




Machines with frequency-controlled motors can be incompatible with certain types of earth leakage circuit breaker. It is important to know that the machines are designed to provide a high level of personal safety, which is why items of external equipment such as earth leakage circuit breakers are not necessary but is recommended. If you still want to connect your machine across an earth leakage circuit breaker, please remember the following:

- contact a skilled, authorised installation company to ensure that the appropriate type of breaker is chosen and that the dimensioning is correct
- for maximum reliability, connect only one machine per earth leakage circuit breaker
- it is important that the earth wire is properly connected.

In instances where the machine is not equipped with an all pole switch, one must be installed beforehand.

In accordance with the wiring rules: mount a multi-pole switch prior to the machine to facilitate installation and service operations.

The connecting cable shall hang in a gentle curve.

For AU/NZ: Fixed wiring is in accordance with AS/NZS 3000.

7.2 Single-phase connection

Demount the cover panel from the supply unit. Connect the earth and other wires as shown.

1AC	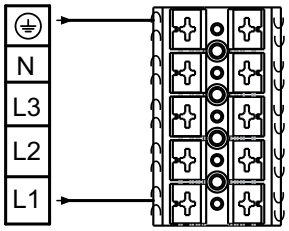
1AC	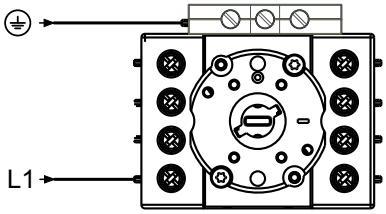
1NAC	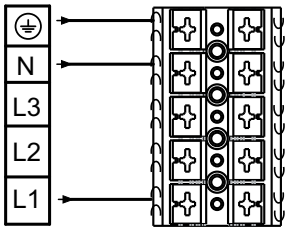
1NAC	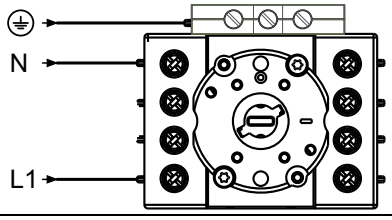

When the installation is completed remount the cover panel and check:

- That the drum is empty.
- That the machine operates by connecting the power to the machine and start a program with heat.

7.3 Three-phase connection

Demount the cover panel from the supply unit. Connect the earth and other wires as shown.

3AC	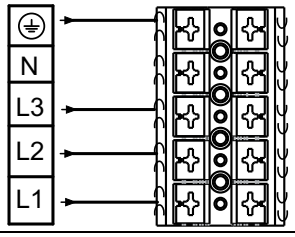
3AC	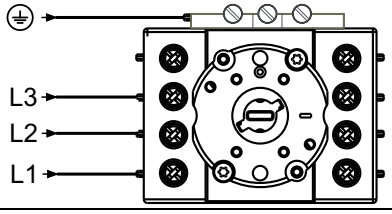
3NAC	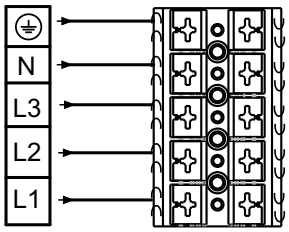
3NAC	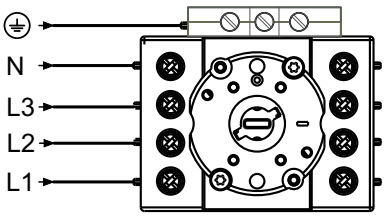

7.4 Electrical connections

Electrical connections					
Heating alternative	Main voltage	Hz	Heating power kW	Total power kW	Recommended fuse A
Electric heated machines	220–240V 1/1N~	50/60	3.0/4.5/6.0	3.3/4.8/6.3	16/25/32
	220–240V 3~	50/60	4.5/6.0	4.8/6.3	13/20
	380–415V 3N/3~	50/60	4.5/6.0	4.8/6.3	10/10
	440/480V 3~	60	6.0	6.3	10
Gas heated machines	220–480V 1/1N/3/3N~	50/60	[1]	0.3	10

1. Total power and recommended fuse does not depend on the heating power in those cases.

Electrical connections					
Heating alternative	Main voltage	Hz	Heating power kW	Total power kW	Recommended fuse A
Machines with heat pump	220-240V 1/1N 3~	50/60	[1]	2.3	10
	380-415V 3N~	50/60	[1]	2.3	10

1. Total power and recommended fuse does not depend on the heating power in those cases.

7.5 Functions for I/O-boards

Depending on machine configuration, the inputs are configured according to the following table:

Connection	
Terminal 5	Enable start
Terminal 6	Remote start /stop
Terminal 7	Coin 1
Terminal 8	Free start

The signal level for the inputs can be either 5-24V DC/AC or 100- 240V AC.

For 5-24V, connect the signal reference to terminal 3 and for 100-240V to terminal 4. The potentials on the inputs cannot be mixed!

The electrical schematic can be one of the following:

7.5.1 Enable start

This signal can be used to permit the start of the program when the machine is in standby.

Once permission to start has been granted, the signal from the central payment or the booking system must remain active (high) during drying. When the signal gets inactive (low) the machine will abort ongoing program and enter cooling.

To receive the feedback signal from the machine, 230V or 24V must be connected to terminal 19. The feedback signal on terminal 18 will remain active (high) during entire program.

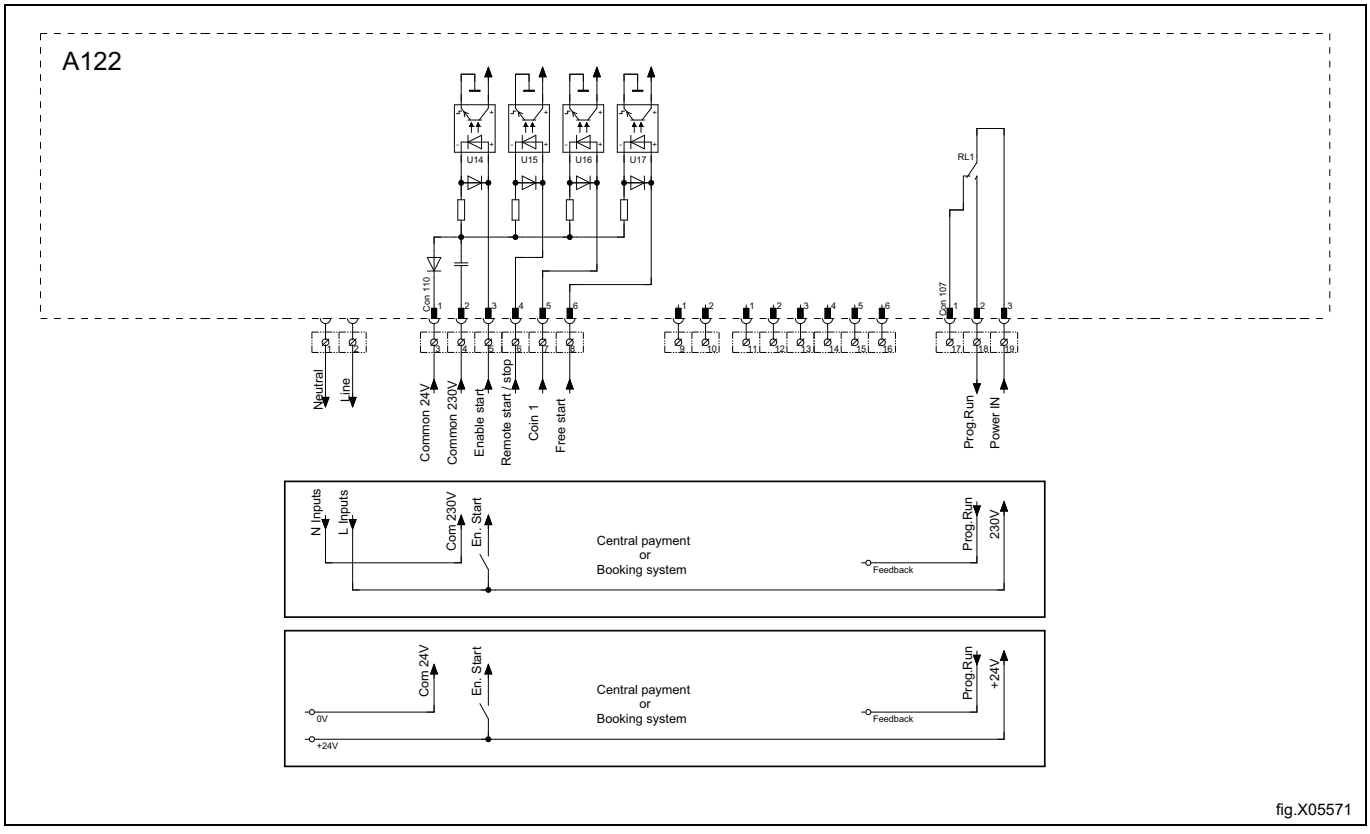

7.5.2 Remote start/stop

This signal can be used to start the program when the machine is in standby, to pause the cycle when running and to continue the cycle when paused.

The central payment system must provide a pulse 750–3000 ms (1000 ms is recommended) to start the program.

To receive the feedback signal from the machine, 230V or 24V must be connected to terminal 19. The feedback signal on terminal 18 will remain active (high) during entire program.

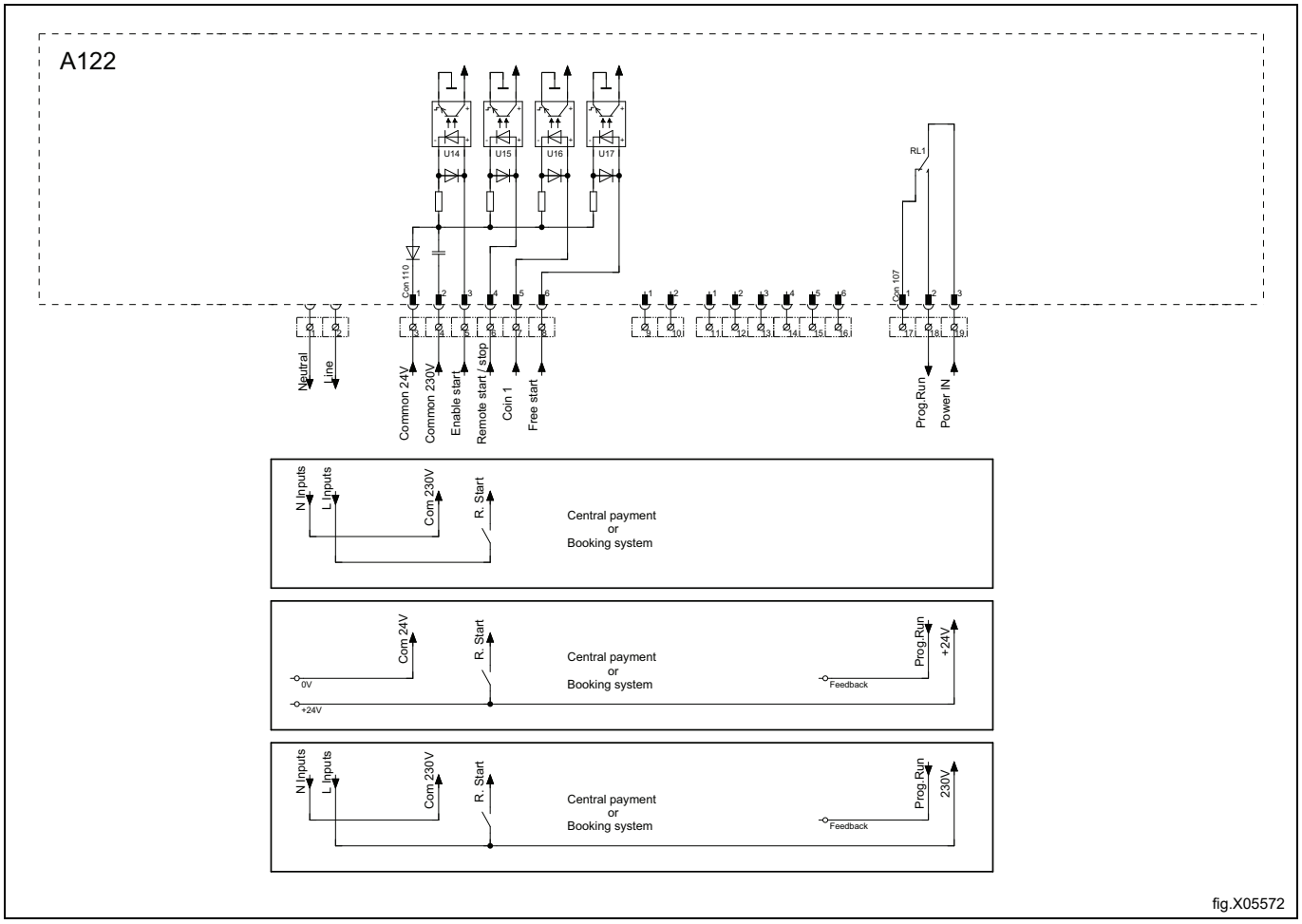

fig.X05572

7.5.3 Free start

This signal can be used to be able to start a program without booking or paying when the machine is connected to a booking or a payment system.

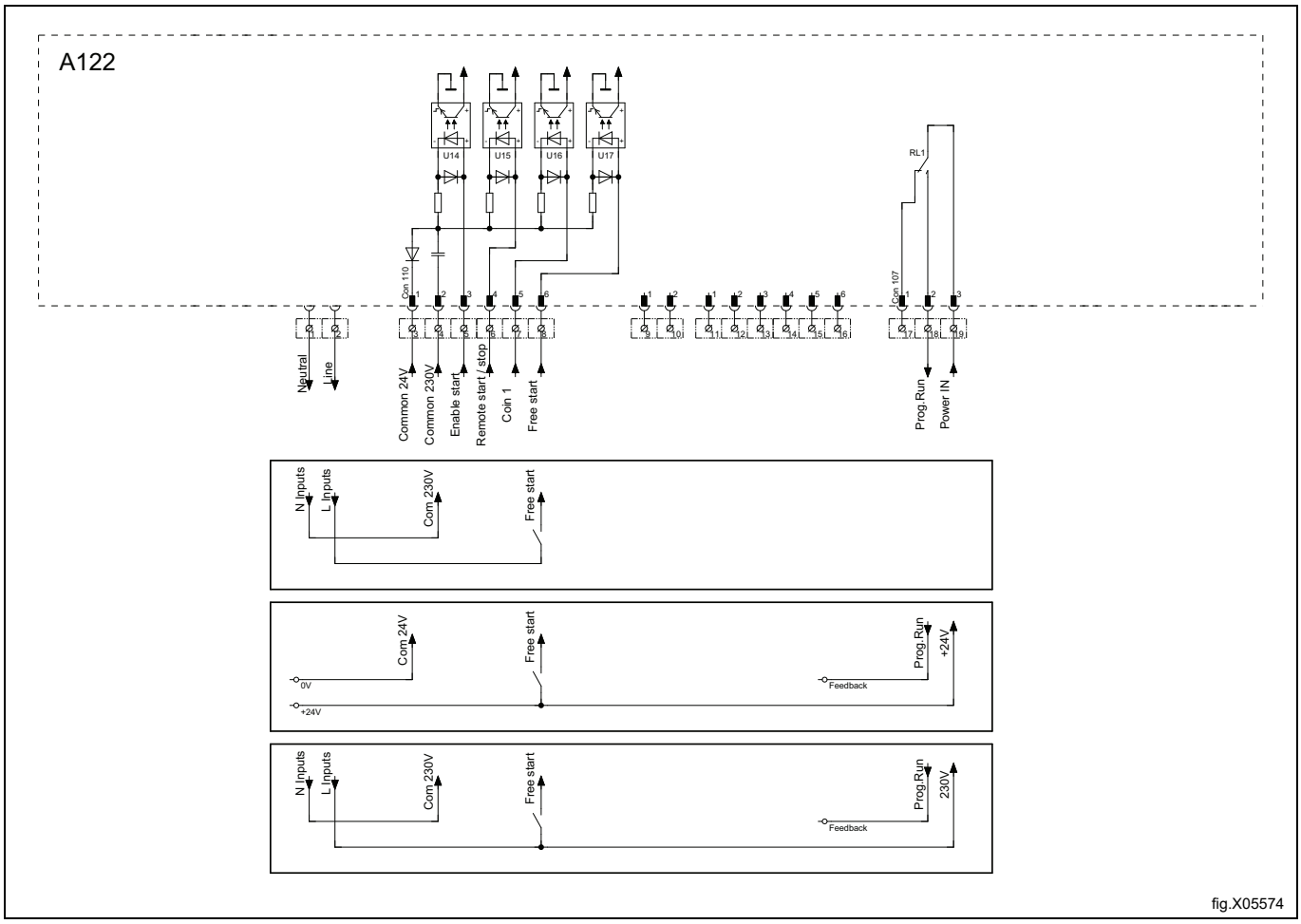

fig.X05574

7.6 Option

7.6.1 External connection 100 mA

A special connection terminal is located on the connection console.

This connection can be used as external control of a fan.

The terminal for external control is equipped with 220–240V max.100 mA and is intended solely for the operation of a contactor.

Max. connection 100 mA.

Gnd. must not be used for earthing of external board.

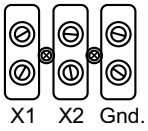

fig.7154

8 Gas connection

8.1 Fasten the label

Before installing the machine fasten the label “Read the user instructions” on the inside of the door in a suitable place and at the front panel.

The label must have the correct country code, choose the correct label from the gas kit.

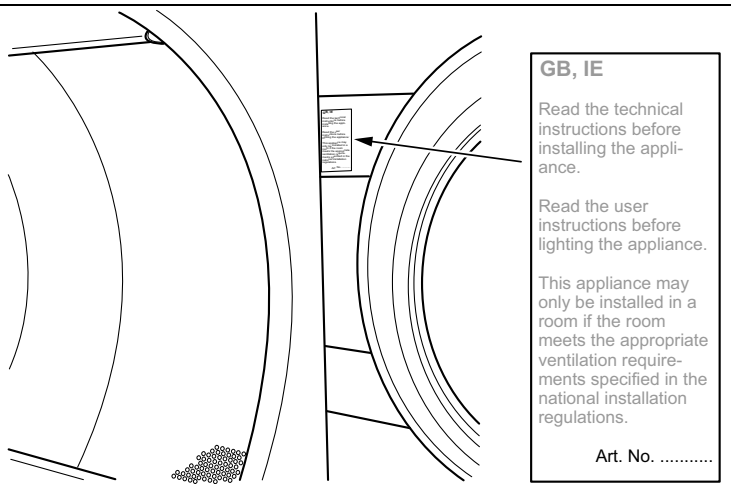

fig.7642

8.2 General

May only be carried out by qualified personnel.

Mount a shut-off valve upstream from the machine.

The factory nozzle pressure setting corresponds to the fuel value given on the data label.

Check that the nozzle pressure and fuel value correspond with the values in the gas tables on the following pages. If not, contact the supplier.

Bleed the pipe system before connecting the machine.

Note!

After connection all joints must be checked. There must not be any leaks.

8.3 Gas installation

Note!

- **The default gas appliances are built to run on natural gas (GNH) according to 2H or 2E (G20).**
- **The default gas appliance shall not be installed at an altitude above 610 m (2001 ft).**
- **To run on another gas type gas converting must be done on the machine.**
- **The gas converting accessories for other gases at altitudes below 610 m (2001 ft) are in the accessory bag.**
- **For LPG use gas qualities according to GPA Midstream Standard 2140-23.**

The data label shows the injector size and the injector pressure and the countries that use this gas quality:

AL	Albania	IE	Ireland
AT	Austria	IS	Iceland
BE	Belgium	IT	Italy
BG	Bulgaria	LT	Lithuania
CH	Switzerland	LU	Luxembourg
CY	Cyprus	LV	Latvia
CZ	Czech Republic	MK	Republic of Macedonia
DE	Germany	MT	Malta
DK	Denmark	NL	Netherlands
EE	Estonia	NO	Norway
ES	Spain	PL	Poland
FI	Finland	PT	Portugal
FR	France	RO	Romania
GB	United Kingdom	SE	Sweden
GR	Greece	SI	Slovenia
HR	Croatia	SK	Slovakia
HU	Hungary	TR	Turkey

You should check the kind of energy gas that is available in your place and check high altitude of the machine located place.

There are many gas types of the same kind but the machine should be equipped with different kinds of nozzles depending on the gas type.

For non-european countries check the heat value of the energy gas and compare it to the declared heat value of gas in the attached label.

8.4 Table of pressure and adjustment

Natural gas	Gas category	Inlet pressure (mbar)	Nozzle pressure (mbar)	Nozzle size (⌀ mm)	Air reducing/ restriction plate (mm)	Label number	May be available in following countries
	2H, 2E	20	8	2.50	No	Default	AT, BG, CH, CZ, DE, DK, EE, ES, FI, GB, GR, HR, HU, IS, IE, IT, LT, LU, LV, NO, PL, PT, RO, SE, SI, SK, TR
	2E+	20 / 25	No regulation	2.00	No	490375691	BE, FR
	2E (G20)	20	8	2.50	No	490375692	NL
	2L (G25)	25	12				
	2(43.46-45.3 MJ/m3 (0 °C)) (G25.3)	25	12				
	2LL (G25)	20	12	2.50	No	490375692	DE

Liquid petroleum gas (LPG)	Gas category	Inlet pressure (mbar)	Nozzle pressure (mbar)	Nozzle size (⌀ mm)	Air reducing/ restriction plate (mm)	Label number	May be available in following countries
BP mixtures according to GPA Midstream Standard 2140-23	3+	28-30 / 37	No regulation	1.35	No	490375693	BE, CH, CY, CZ, ES, FR, GB, GR, IE, IT, LT, LU, LV, PT, SK, SI
Commercial Butane according to GPA Midstream Standard 2140-23	3B/P	30, 37, 50	28	1.35	No	490375694	AT, BE, BG, CH, CY, DE, DK, EE, FI, FR, GB, HR, HU, IS, IT, LT, LU, MT, NL, NO, PL, RO, SE, SI, SK, TR
Propane HD-5 according to GPA Midstream Standard 2140-23	3P	30, 37, 50	28	1.45	No	490375695	AT, BE, CH, CZ, DE, ES, FI, FR, GB, GR, HR, IE, IT, LT, LU, NL, PL, PT, RO, SI, SK

Town gas	Gas category	Inlet pressure (mbar)	Nozzle pressure (mbar)	Nozzle size (⌀ mm)	Air reducing/ restriction plate (mm)	Label number	May be available in following countries
	1a	8	4.5	4.10	487042239 A	Default	DK, IT
	1b	8	3.5	4.10	487042239 A	490376107	SE

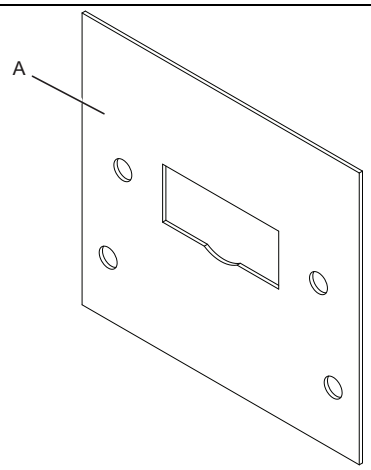

fig.X02722

When a machine shall be installed or used on high altitude (2001 feet and higher) a kit for high altitude must be installed.

For kit No. please refer to the spare parts list.

Note!

- **The default gas appliances are built to run on natural gas (GNH) according to 2H or 2E (G20).**
- **The default gas appliance shall not be installed at an altitude above 610 m (2001 ft).**
- **To run on another gas type gas converting must be done on the machine.**
- **The gas converting accessories for other gases at altitudes below 610 m (2001 ft) are in the accessory bag.**
- **For LPG use gas qualities according to GPA Midstream Standard 2140-23.**

8.5 Test run

Note!
Before test run the machine, ensure that the air flow/static back pressure has been adjusted accorded to the "Evacuation system" section. Adjust the air flow if necessary.

- Loosen the measuring branch screw (2) 1/4 turn; connect a manometer to the measuring branch and make sure the connection is tight to prevent air leakage.
- Connect the power to the machine and select a program with heat.
- Start the machine.
- Check that the nozzle pressure is correct according to the gas type, see "Table of pressure and adjustment".
- If the nozzle pressure should be adjusted:
  – Demount the cover screw (3).
  – Turn the screw (4). Clockwise: increasing nozzle pressure.
  – Turn the screw (4). Counter Clockwise: decreasing nozzle pressure.
- Check that the gas is burning evenly. The blue flame on the burner is preferred.

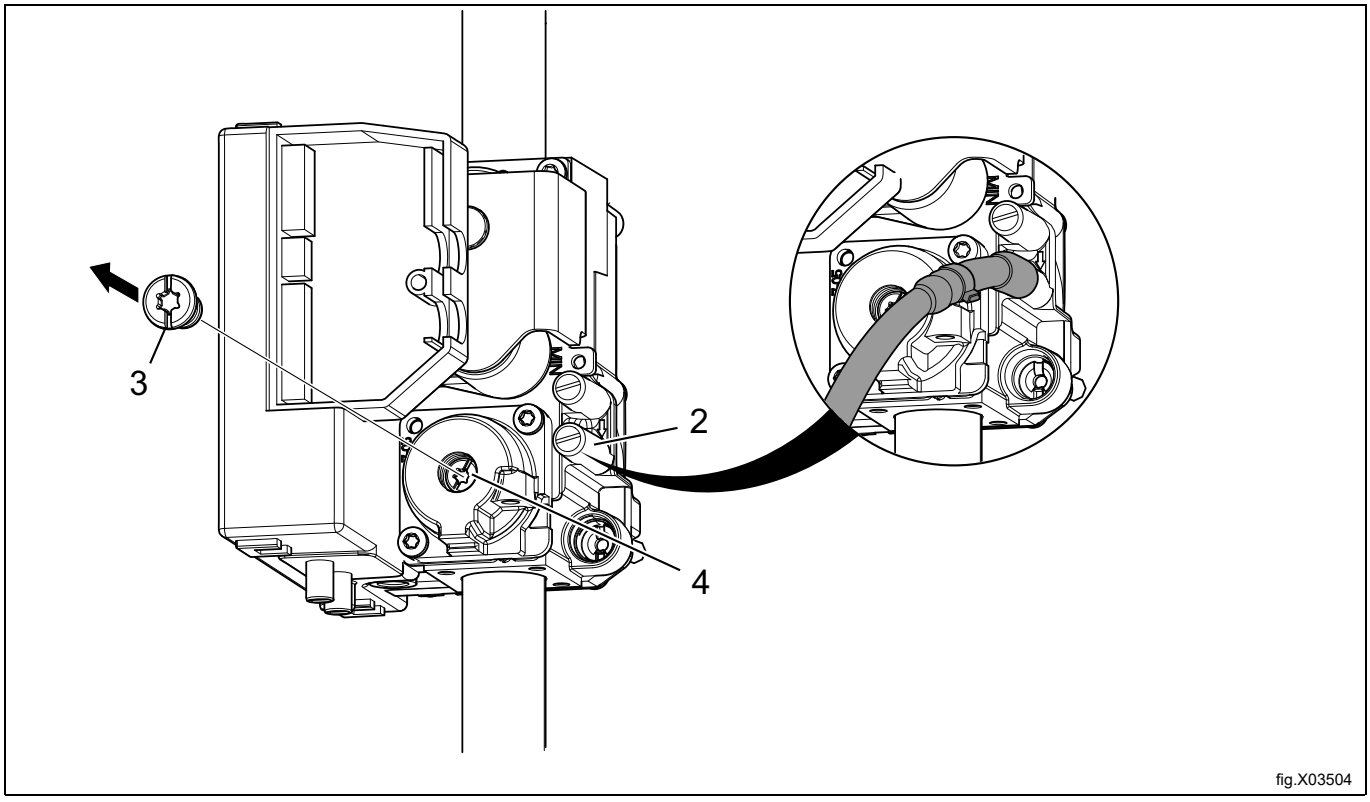

fig.X03504

- Remount the cover screw (3).
- Remove the manometer and tighten the screw (2) when the adjustments are done.

Note!
After connection all joints must be checked. There must not be any leaks.

8.6 Converting instructions

- Disconnect the power to the machine.
- Demount the back panel.
- Remove the nozzle (1).
- Mount the new supplied nozzle.

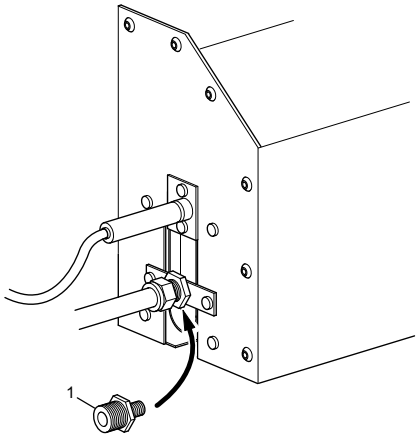

fig.7506A

- Loosen the measuring branch screw (2) 1/4 turn; connect a manometer to the measuring branch and make sure the connection is tight to prevent air leakage.
- Ensure that the air flow/static back pressure has been adjusted accorded to the "Evacuation system" section. Adjust the air flow if necessary.
- Connect the power to the machine and select a program with heat.
- Start the machine.
- Check that the nozzle pressure is correct according to the gas type, see "Table of pressure and adjustment".
- If the nozzle pressure should be adjusted:
  - Demount the cover screw (3).
  - Turn the screw (4). Clockwise: increasing nozzle pressure.
  - Turn the screw (4). Counter Clockwise: decreasing nozzle pressure.

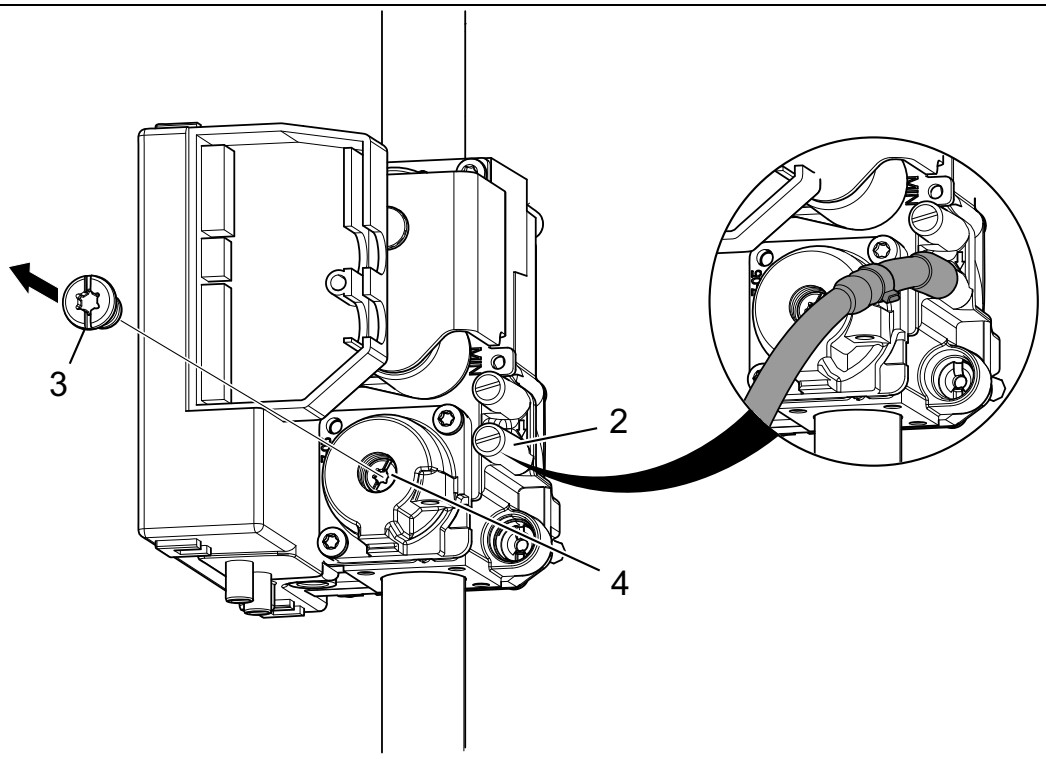

fig.X03504

- Check that the gas flame burns evenly.
- Mount the cover screw (3).
- Remove the manometer and tighten the screw (2) when the adjustments are done.
- Remount the rear panel.
- Put the correct gas label on the data plate, see "Data label" section.

Note!
After connection all joints must be checked. There must not be any leaks.

8.7 Data label

When the machine is to be converted to another gas type, the data label at the rear of the machine must be updated in order for the data to be correct.

Place the data label enclosed in the conversion kit on top of the data label as shown below. If there are more than one data label, select the label with the correct country code and gas type.

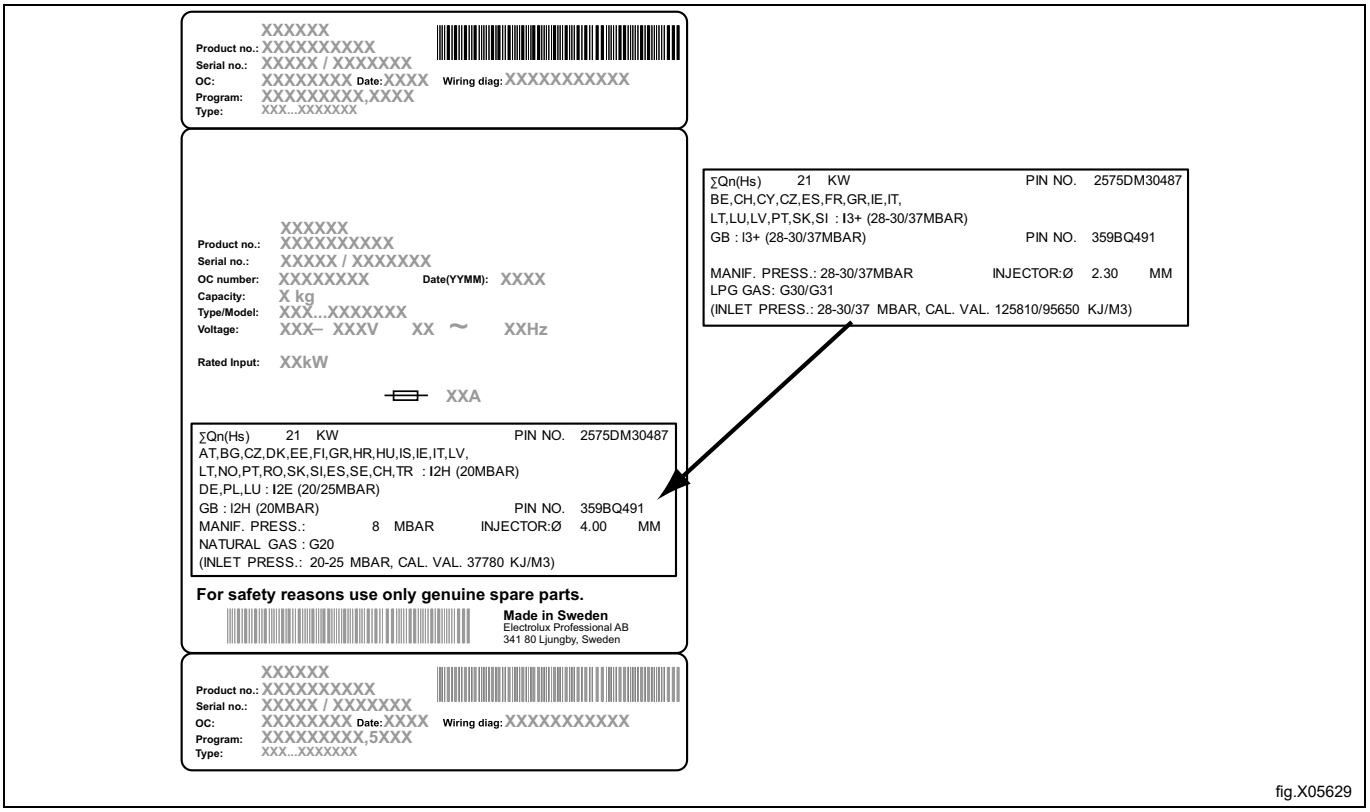

fig.X05629

9 Reversing the door

Disconnect the power to the machine.
For gas heated machines: Turn off the gas to the machine.
Demount the hinges and remove the door. Remove the upper hinge first.

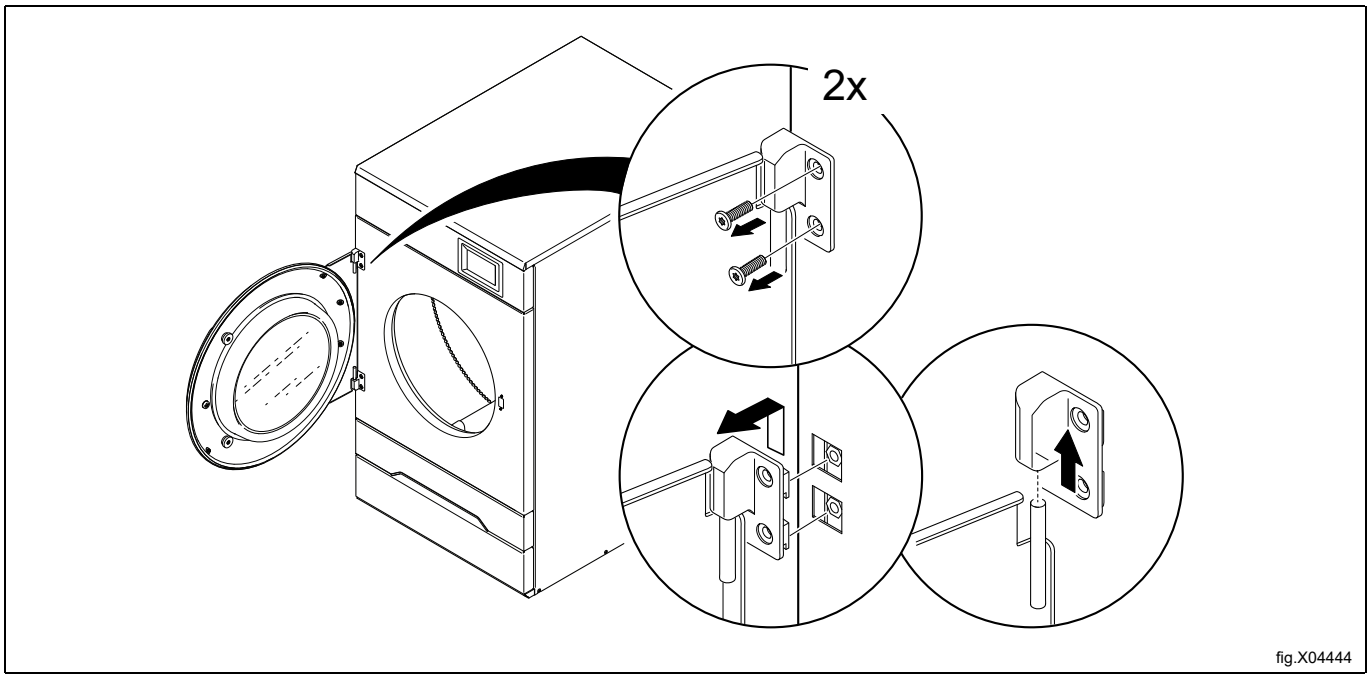

fig.X04444

Remove the filter drawer from the machine.

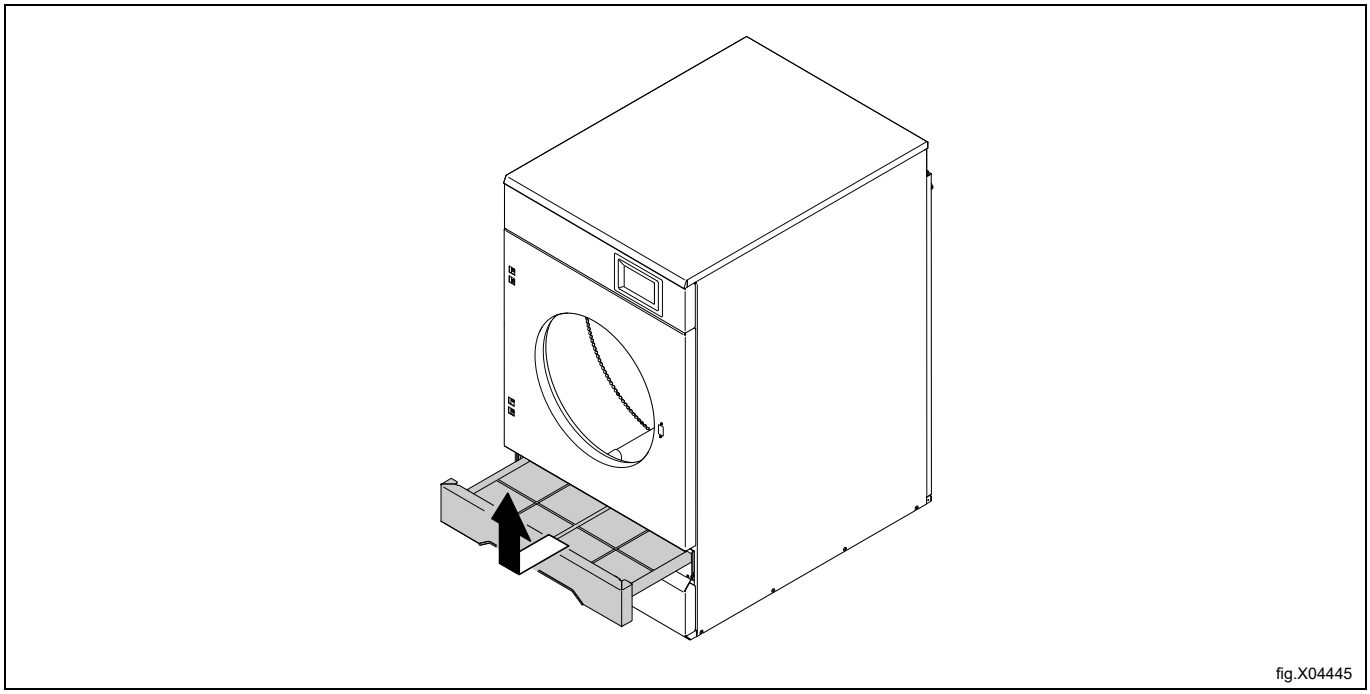

fig.X04445

Demount the front panel.

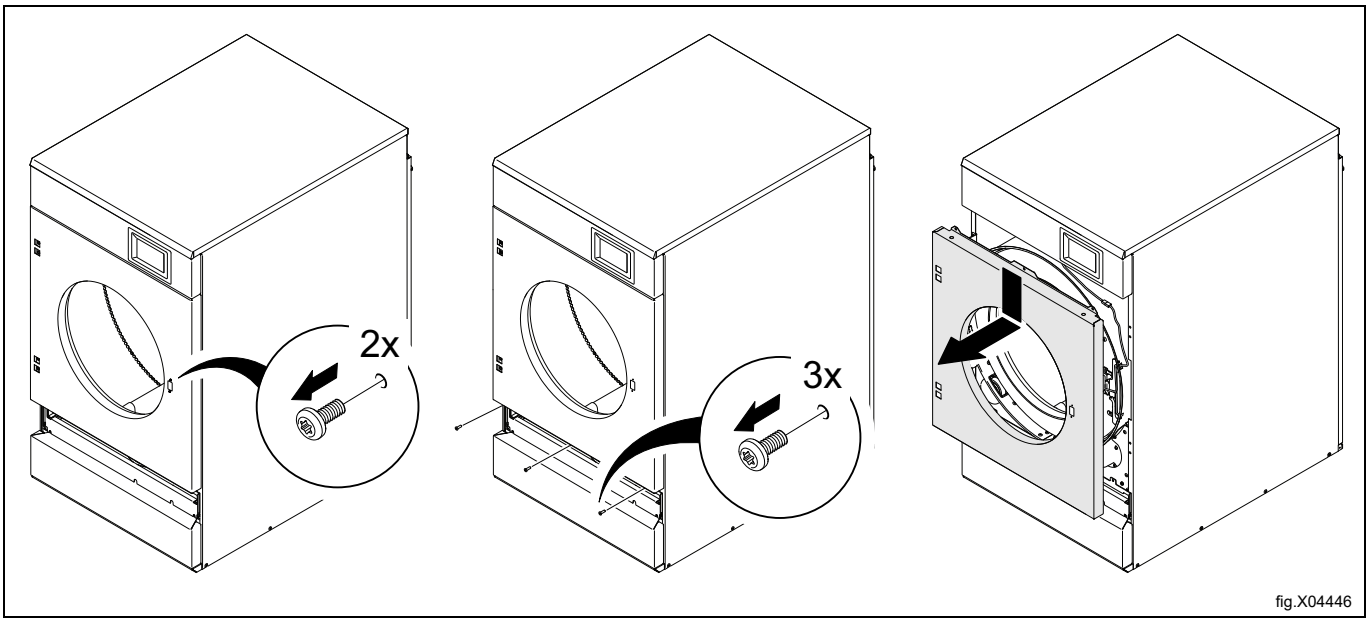

Disconnect the door switch cable.

Remove the upper screw, the cover and the lower screw on the left side.

Remove the screws on the right side to release the reed switch bracket holding the door switch cable. Pull the door switch cable through the hole to release it.

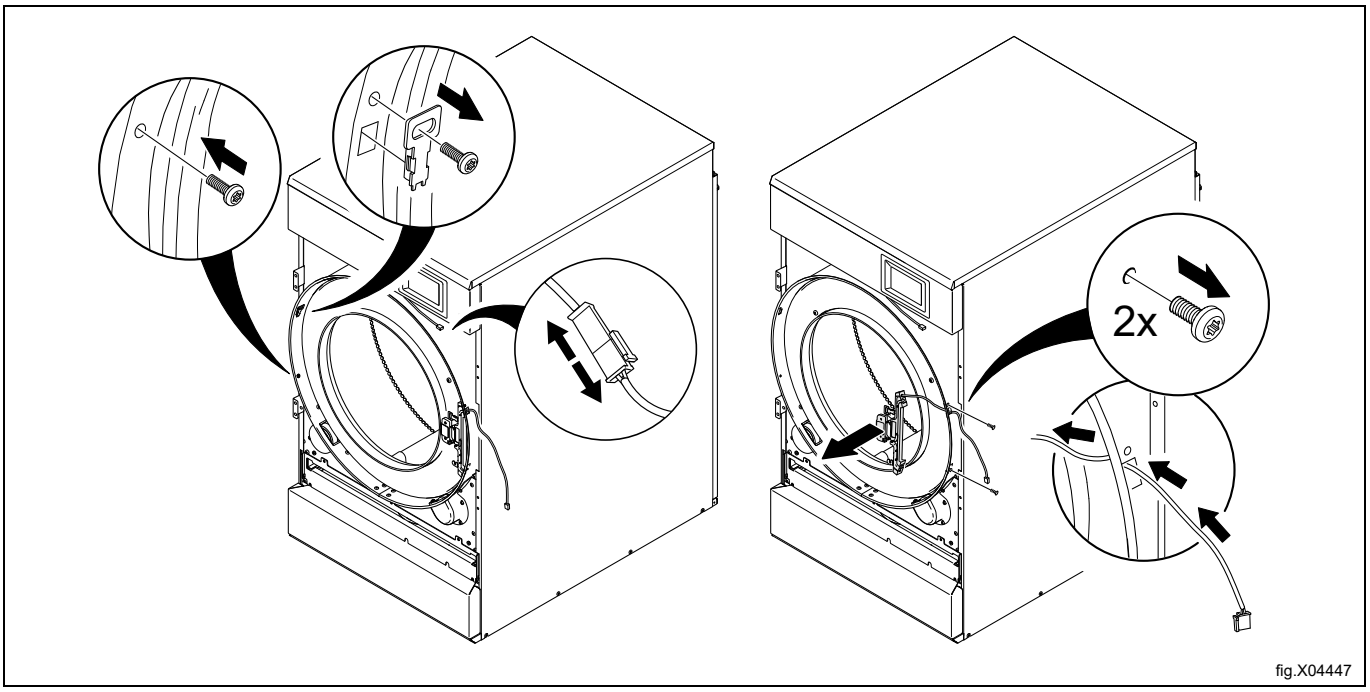

Demount the brackets and fasten them on the opposite side. Make sure to fasten them according to the figure.

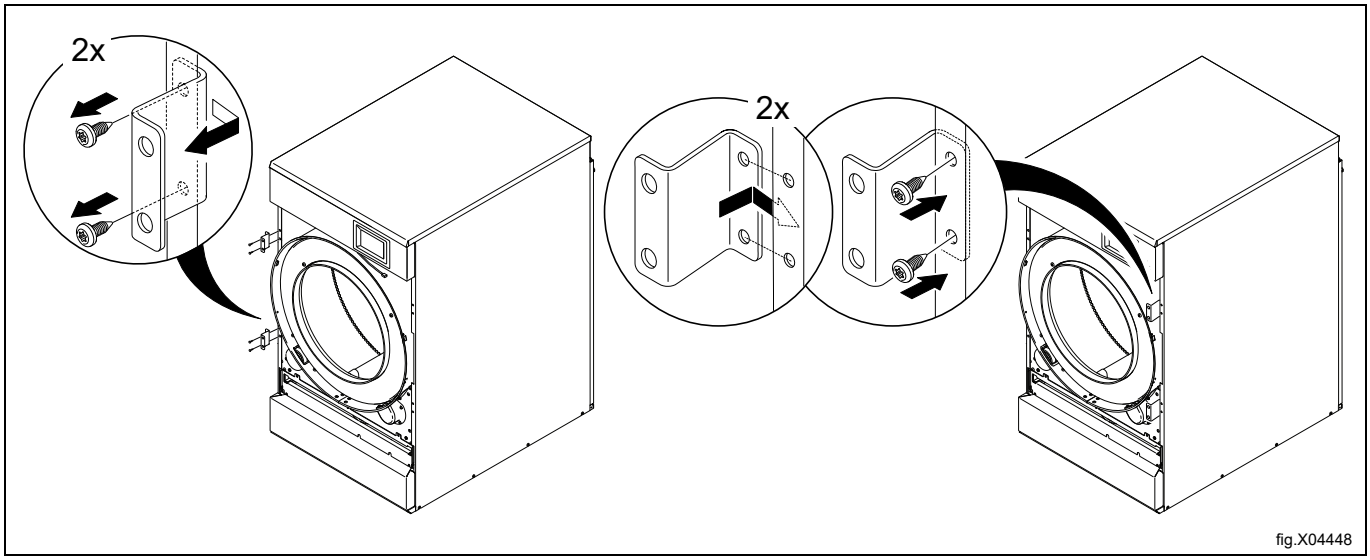

fig.X04448

On the reed switch bracket, pull out and move the door switch cable from the upper to the lower position according to the figure. Make sure that the cable and the end piece are in position.

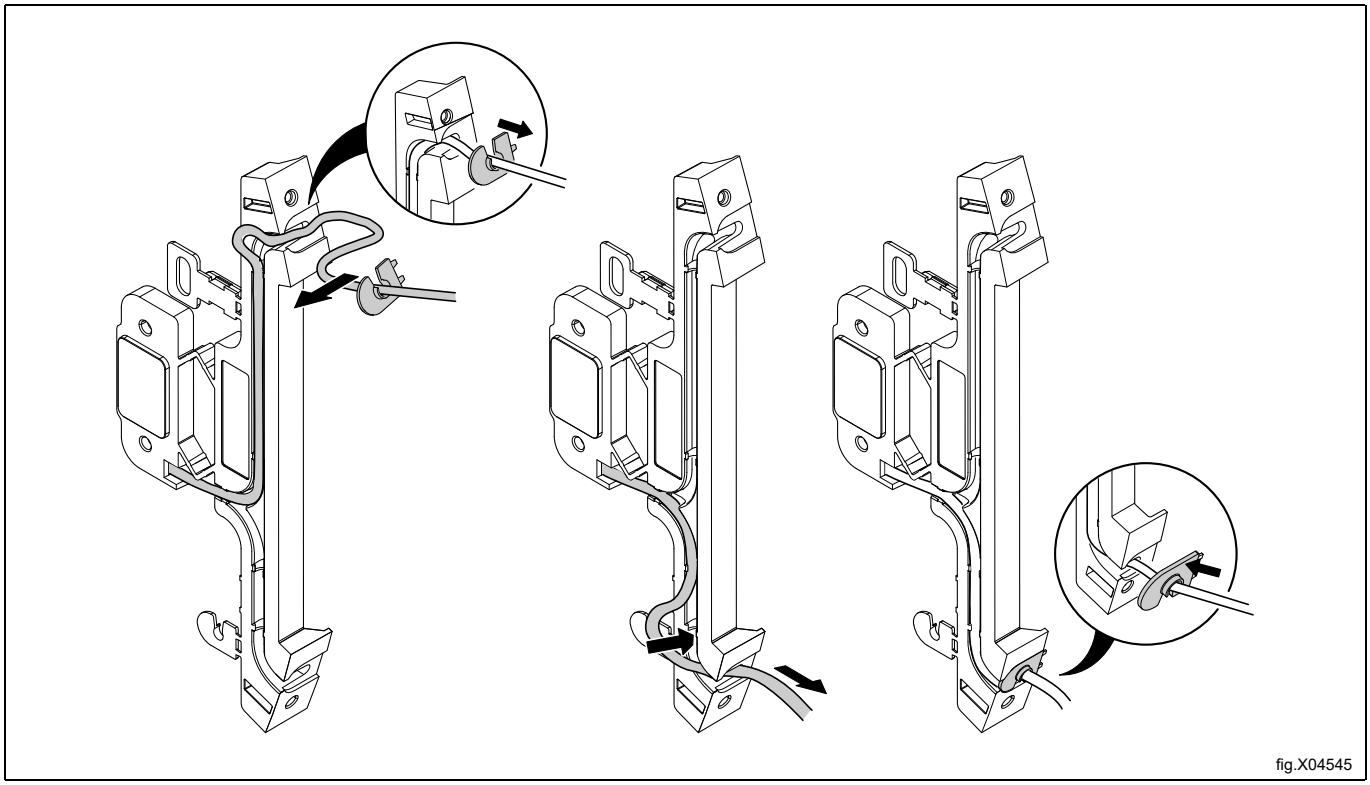

fig.X04545

Turn the reed switch bracket up side down and mount it on the left side. Pull the door switch cable out through the hole and connect it.

Fasten the reed switch bracket with the screws on the left side.

Remount the cover and fasten the upper and lower screw on the right side.

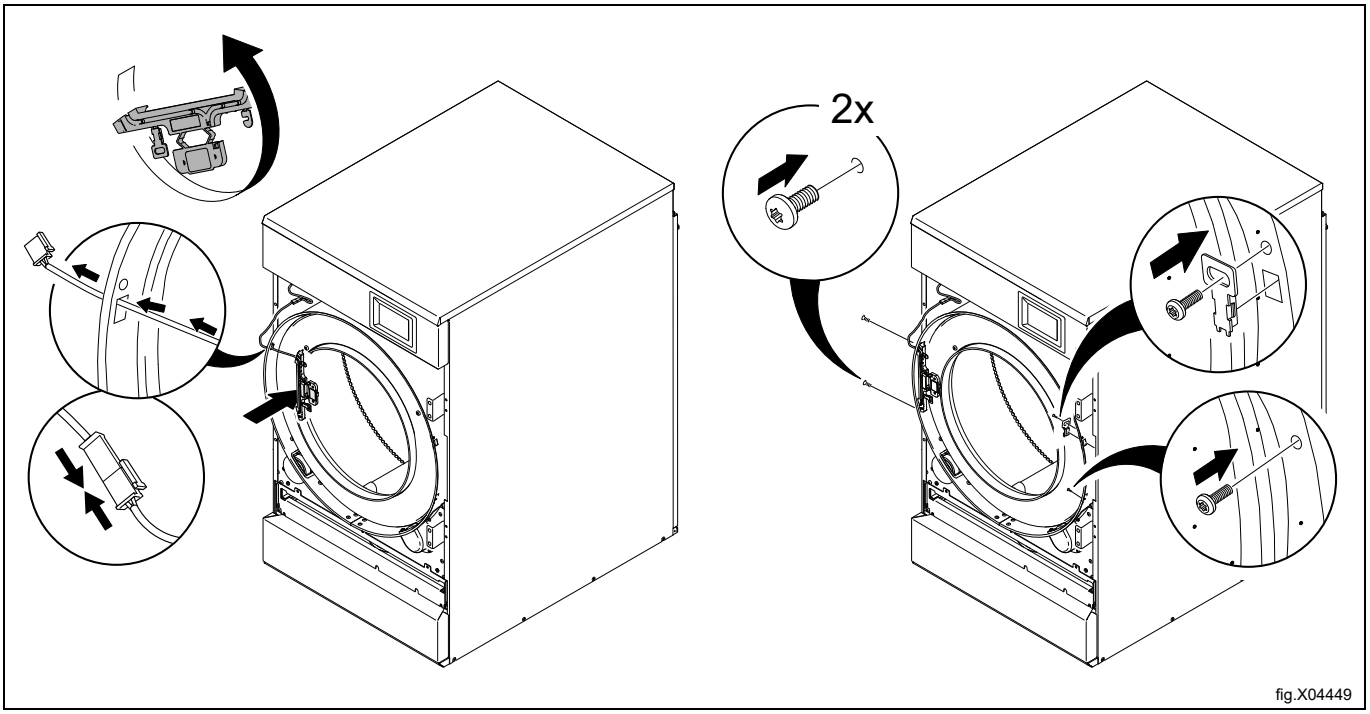

fig.X04449

Turn the front panel up side down and remount it on the machine.

Ensure that the door switch cable does not get damaged when remounting the front panel.

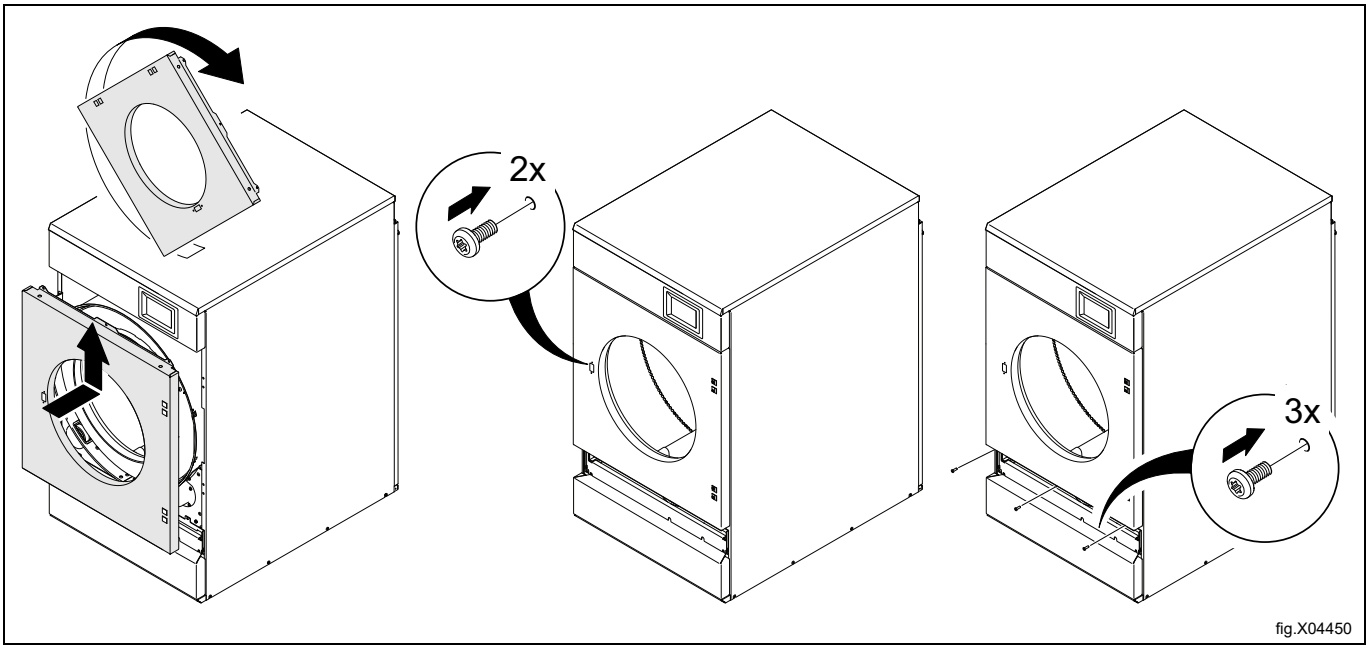

fig.X04450

Insert the filter drawer.

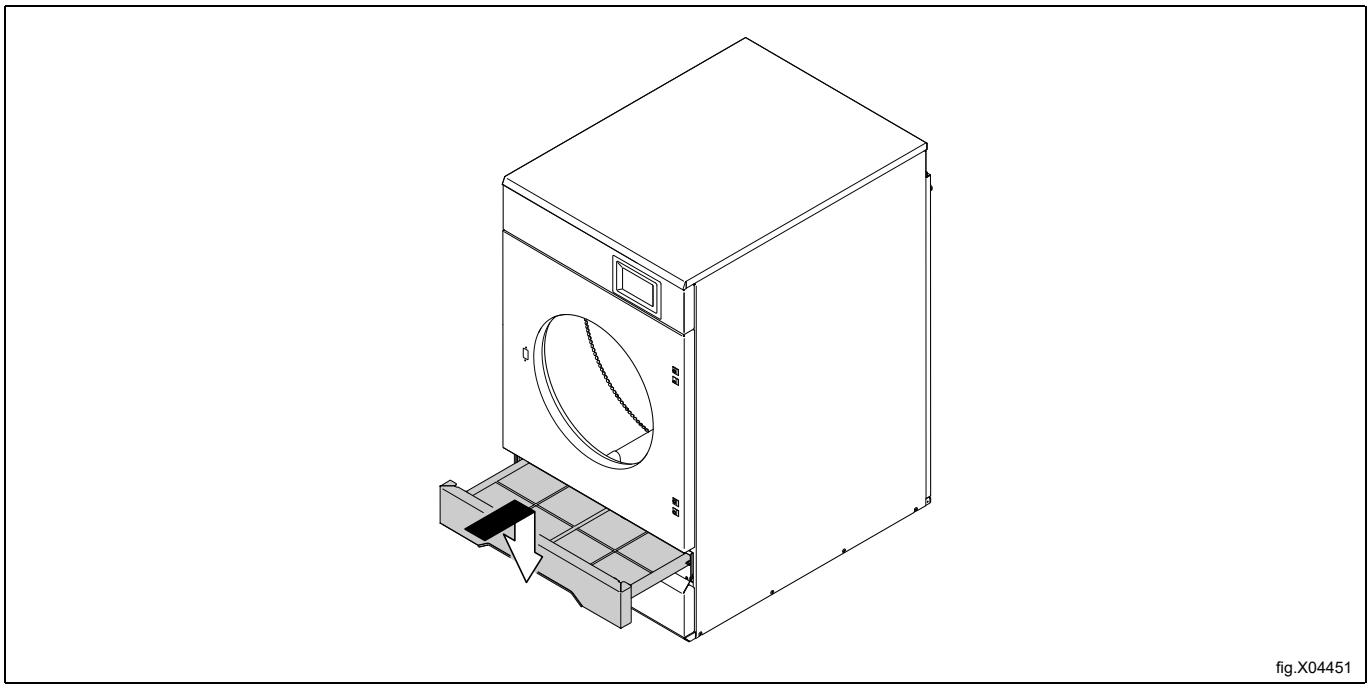

fig.X04451

Turn the door up side down with the inside facing towards you.
Remount the lower hinge first.
Position the door on the lower hinge.

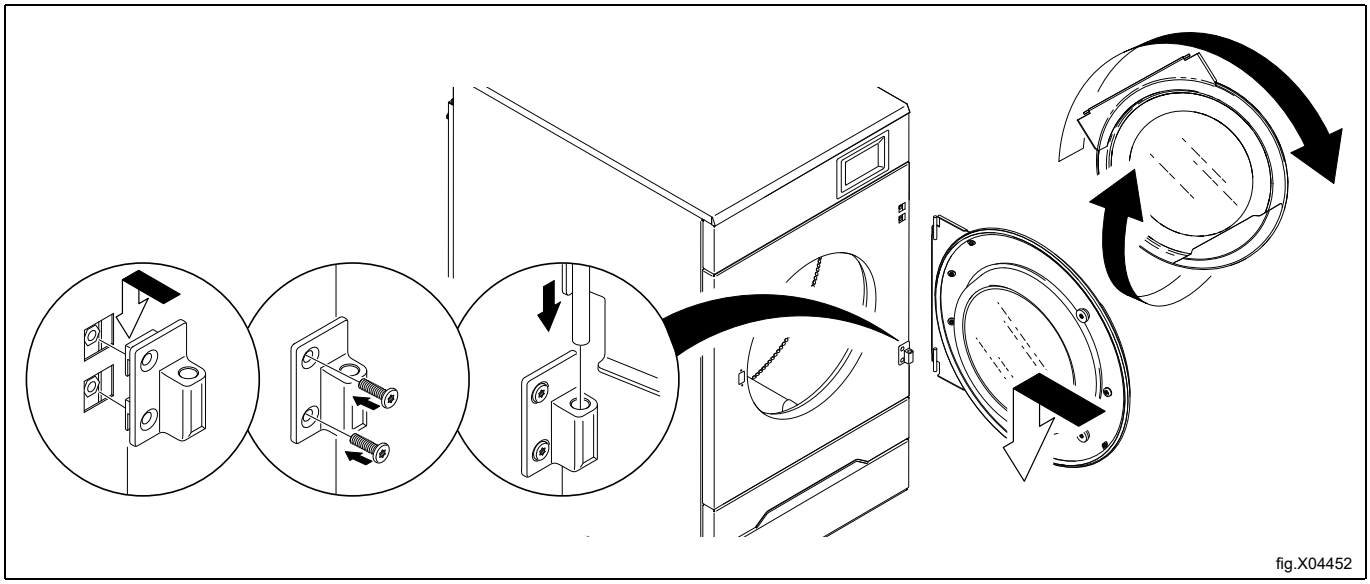

fig.X04452

Put the upper hinge on the door and then fasten the hinge while it is on the door.

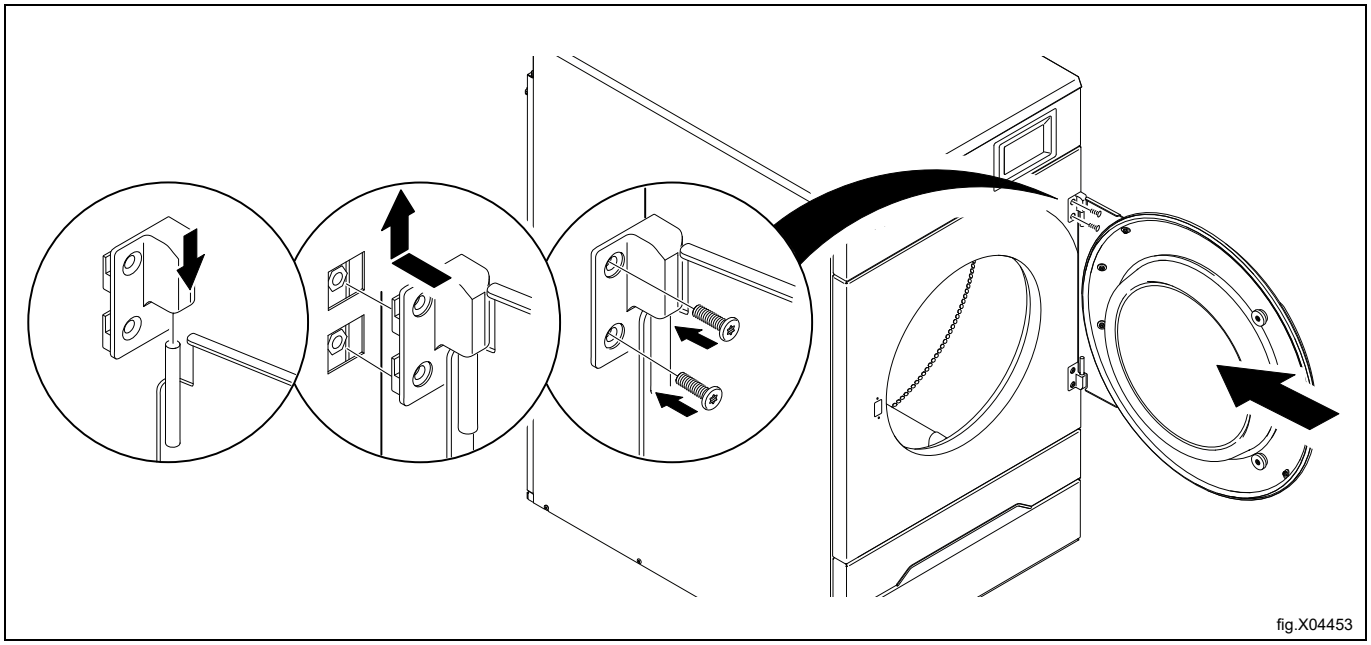

Connect the power to the machine.
For gas heated machines: Turn on the gas to the machine.
Test run the machine.

10 Stacking kit

TD7–8 can be stacked on top of the washer extractor WP7–6, WP7–7, WP7–8 or another tumble dryer TD7–8.
The following kit No. 988918496 shall be ordered and the following instructions shall be used.

10.1 Stacking kit WP7–6, WP7–7, WP7–8, TD7–8 with TD7–8

10.1.1 Contents of the kit

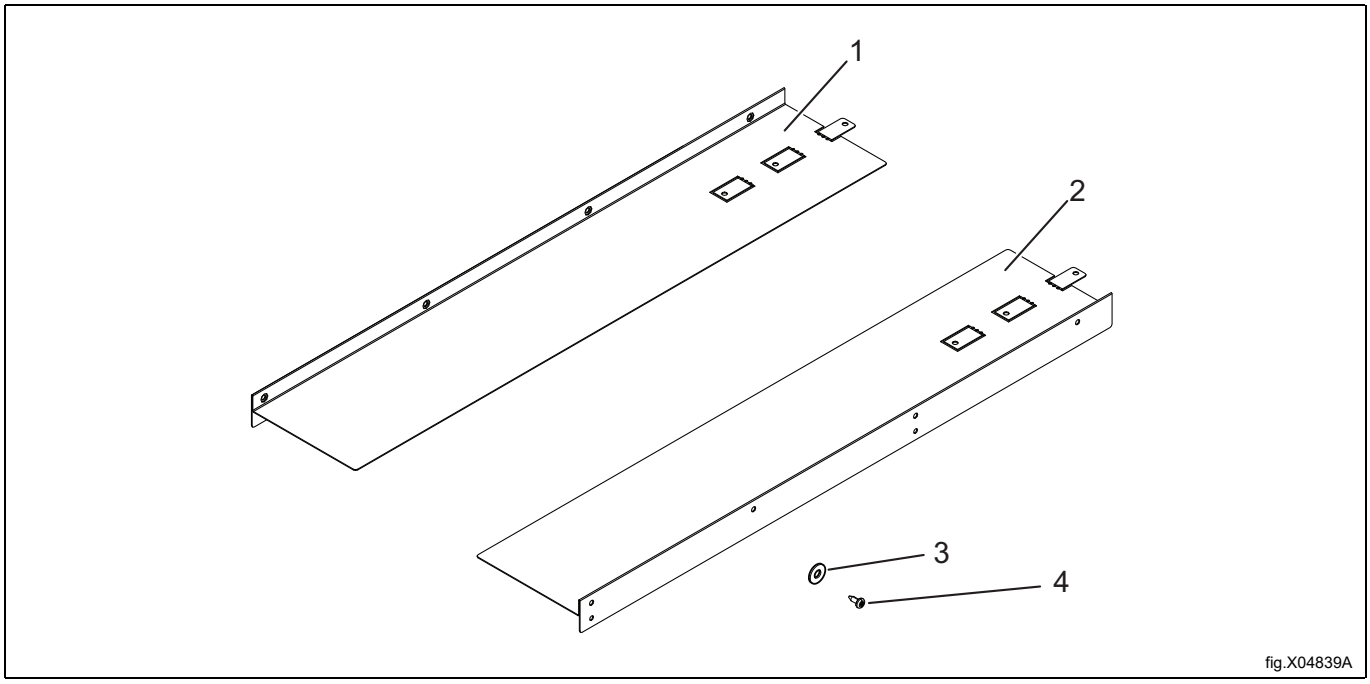

fig.X04839A

Pos.	Part number	Description
1	490630201	Stacking panel left x 1
2	490630701	Stacking panel right x 1
3	490519001	Distance x 4
4	471836901	Screw x 8

10.1.2 Installing the stacking kit

The following instructions are showing the model WP7-8 at the bottom as an example. The procedure is similar for the other models.

Note!

Two persons are recommended for this installation.

Make sure the power is disconnected on both of the machines.

- Demount the 2 screws on the top panel of the washer extractor.

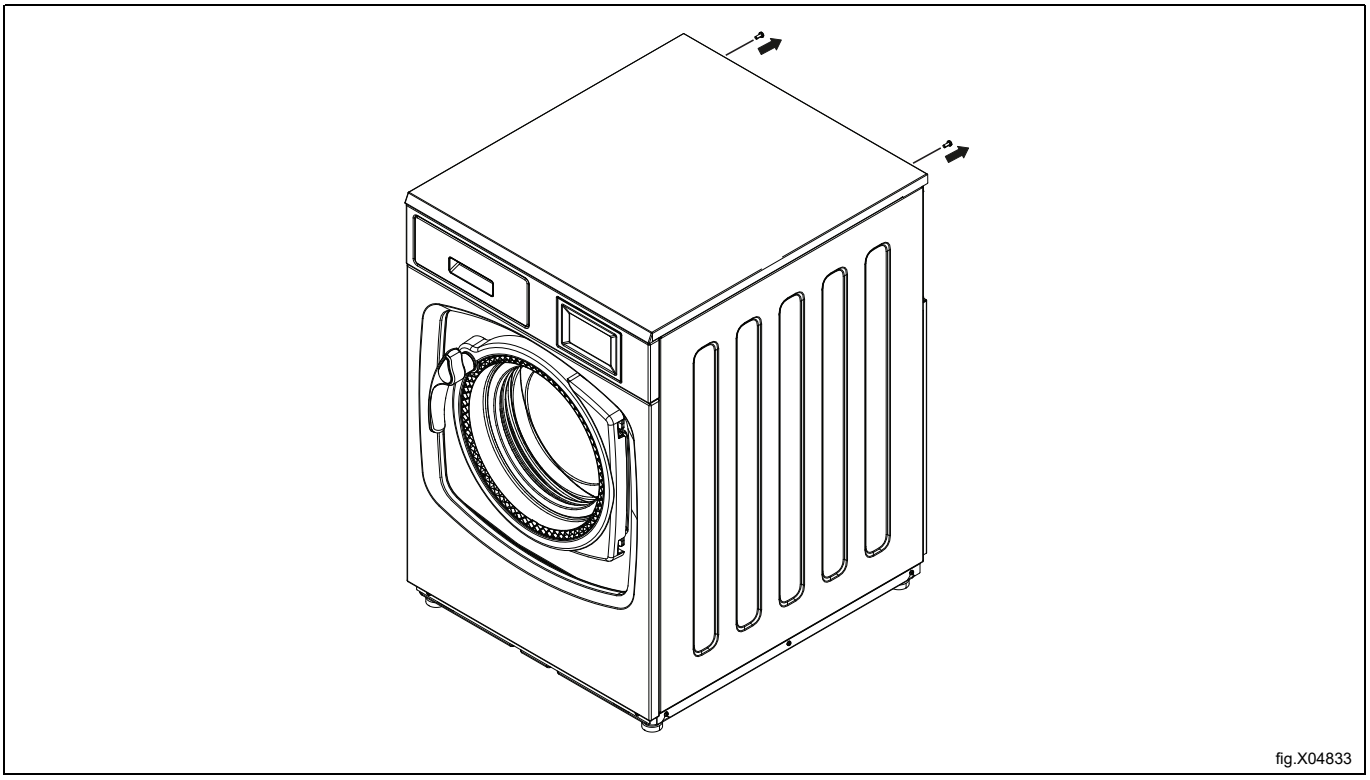

fig.X04833

Bend the stacking panel (1) and (2) at A, B or C 90 degrees downward as the following illustration depending which machine is at the bottom.

A = When WP7-6 is at the bottom and TD7-8 is at the top.

B = When WP7-7, WP7-8 is at the bottom and TD7-8 is at the top.

C = When TD7-8 is at the bottom and TD7-8 is at the top.

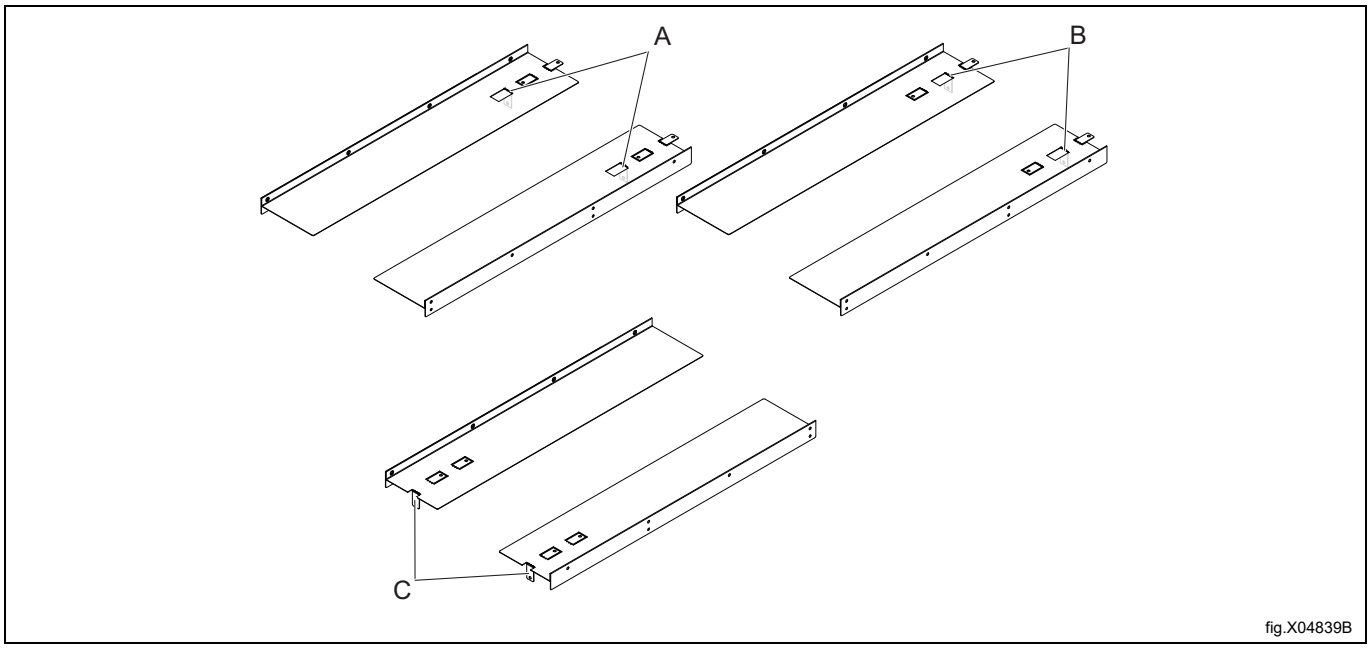

fig.X04839B

10.1.2.1 For all stacking combinations

The following instructions are showing the model WP7-8 at the bottom as an example. The procedure is similar for the other models.

- With the bent stacking panel (1) and (2) at “B” 90 degrees downward, put both of the stacking panels on top of the washer extractor. Make sure the bent area “B” of the stacking panels are completely in contact to the rear of the top panel (C).
- Mark and drill 2 holes (⌀ 3–3.3 mm) on the top panel on each side of the washer extractor (D).

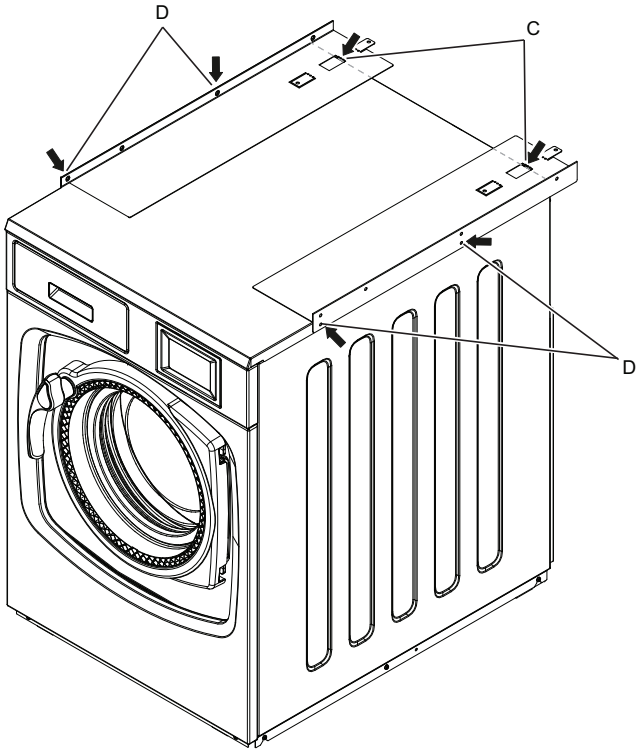

fig.X04852A

- Remove the stacking panel on one side.
- Position each distance (E) to each drilled hole on the top panel of the washer extractor. (They shall be underneath the stacking panel).
- Remount the screw on the rear of the washer extractor (F) and fasten the 2 screws (4) on the side (on the lower positions).

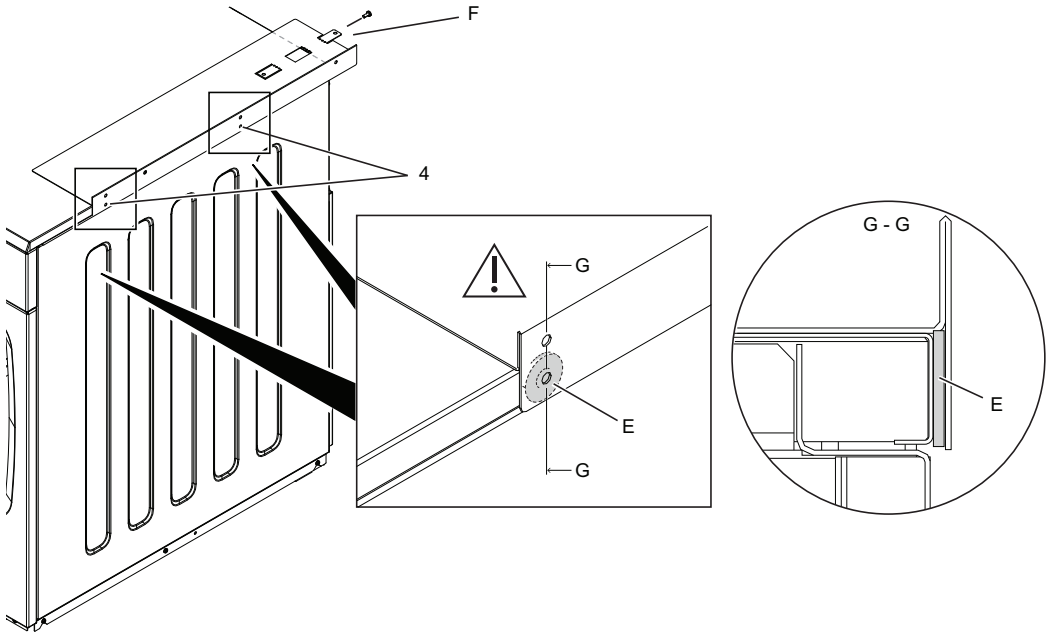

fig.X04853A

On the tumble dryer that should be placed on top; switch the control panel from upper position to lower position according to the following instructions:

- Demount the top panel.

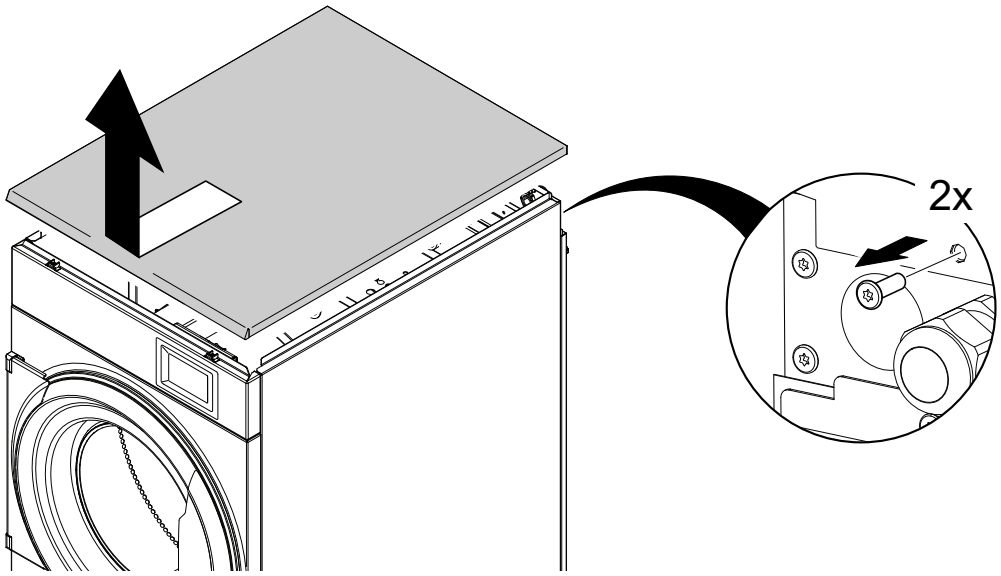

fig.X04592

- Disconnect the cables to the control system.
- On the control panel; remove the two lower screws completely. Loosen the two upper screws a bit, do not remove them completely, if so, the control panel might fall down.
- Remove the control panel.

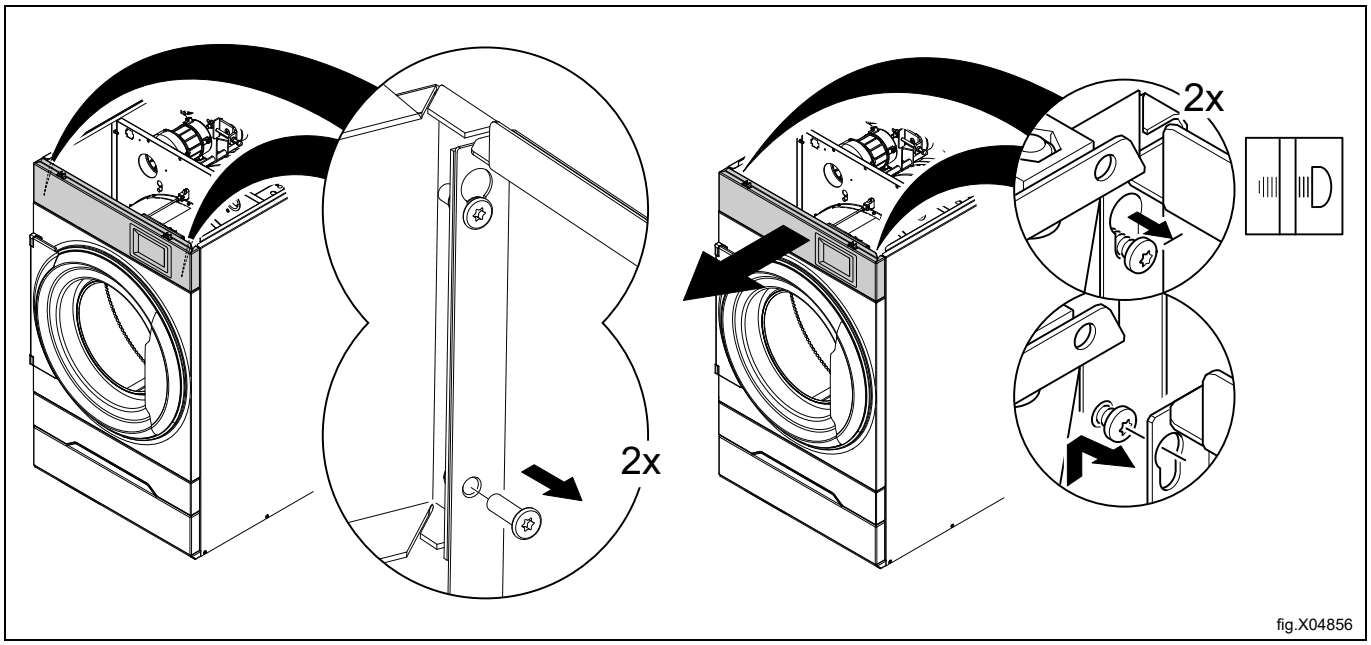

fig.X04856

- Demount the rear panel.

Note!
It is not possible to remove the rear panel unless the main switch is in OFF-position.

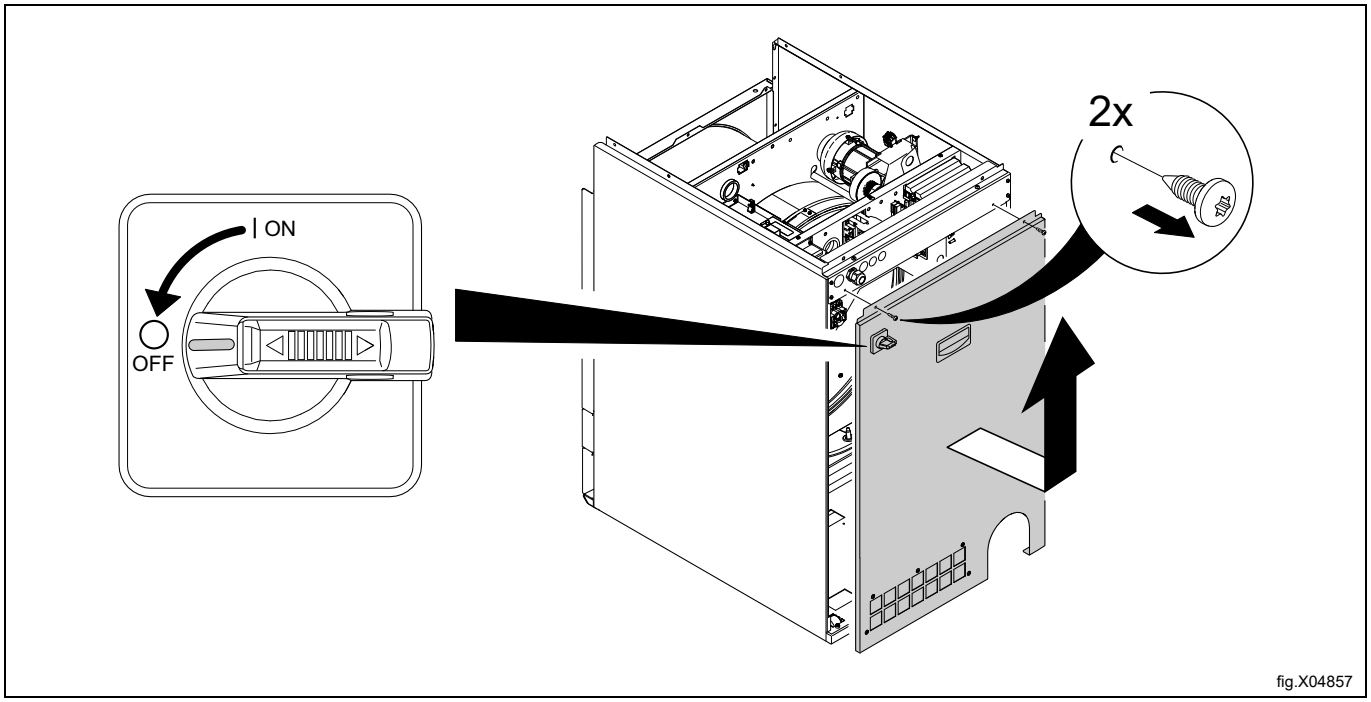

fig.X04857

- Remove the filter drawer.
- Demount the bracket.
- Remove the lower front panel.

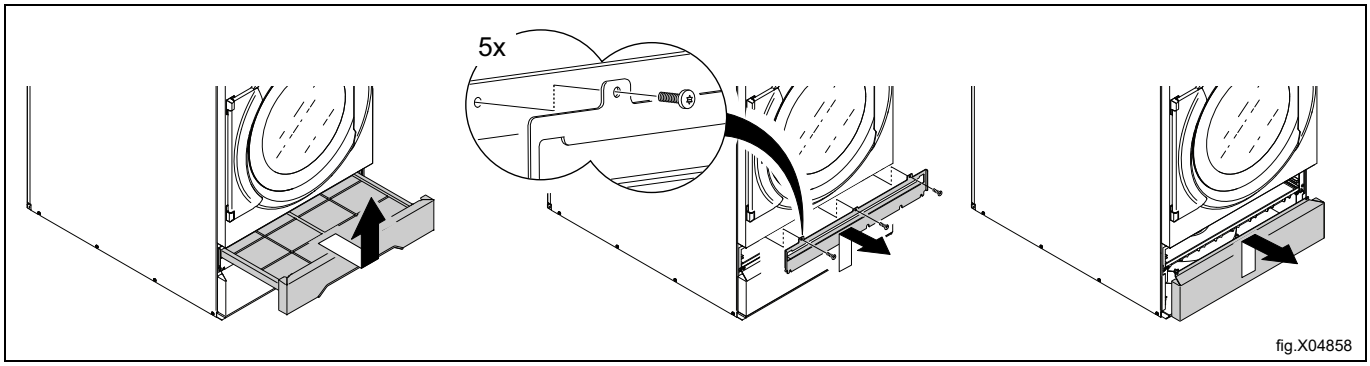

- Move the cables that was disconnected. The cables shall be led back through the holes (A), down and then out through the lower hole. Cut any necessary straps. Make sure to rearrange the cables in a suitable way so the cables will not be damaged or squeezed. Strap the cables in suitable positions.

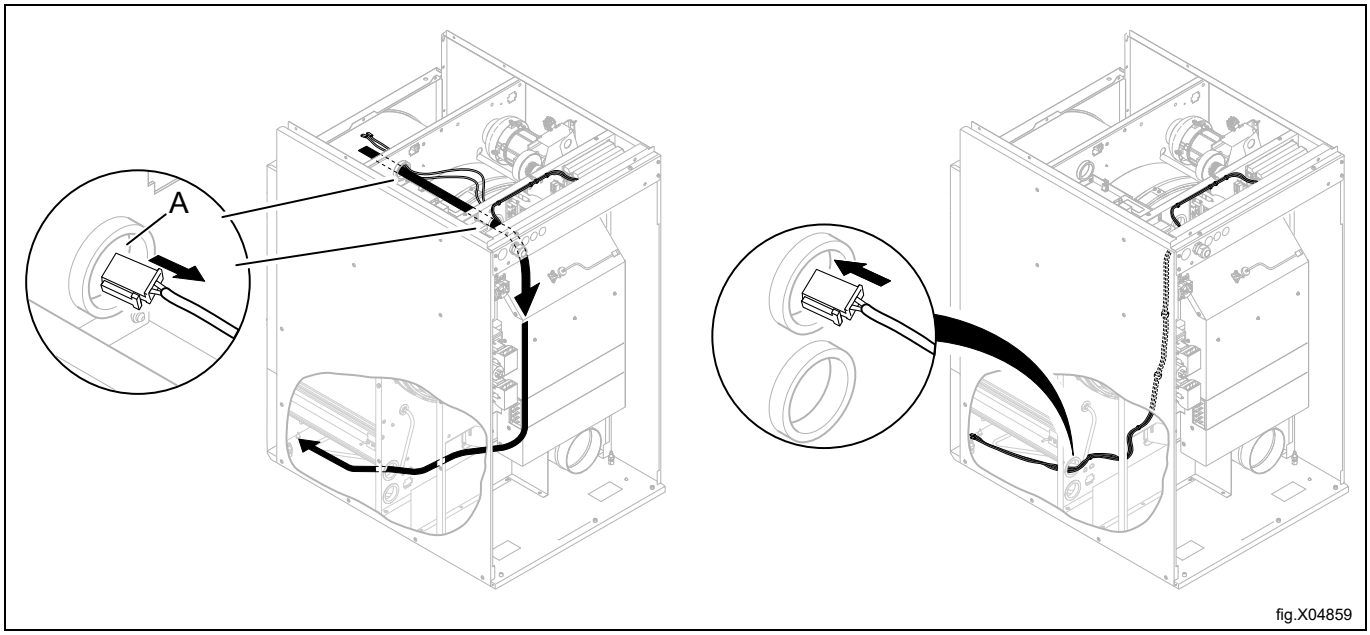

- On the control panel that was removed from the tumble dryer, remove the two guide top panel and move them to the lower control panel instead.
- Remove the two screws that was only loosened before from the control panel.

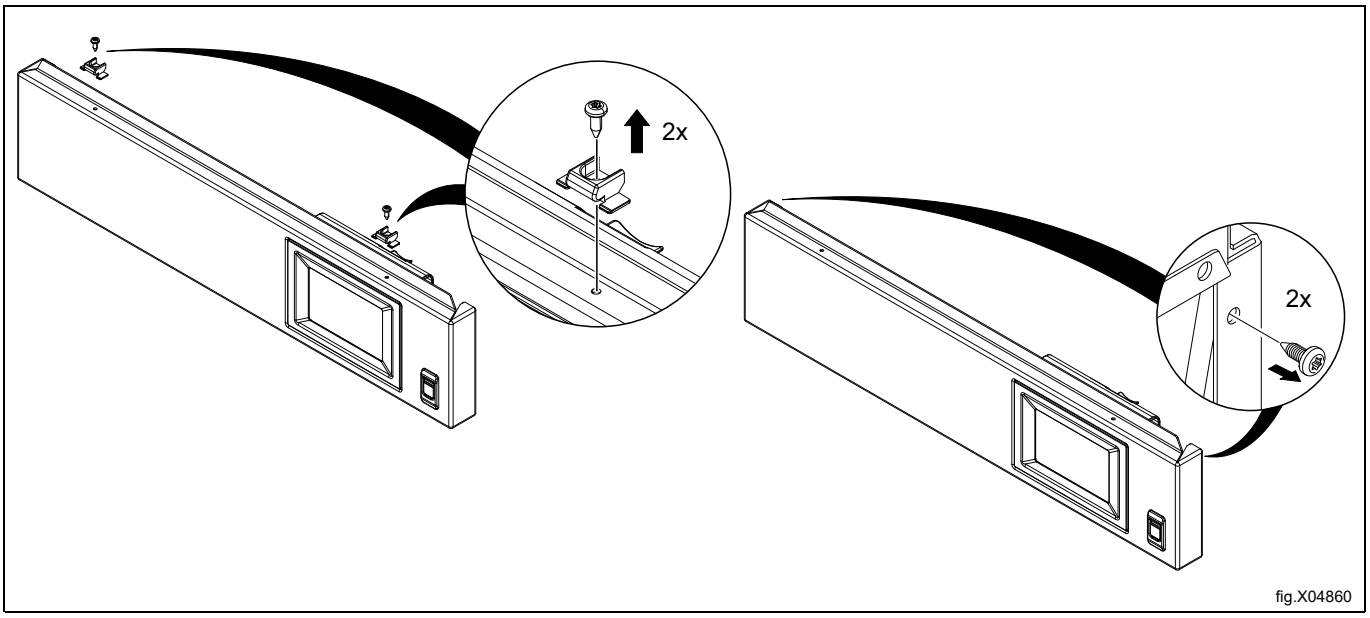

fig.X04860

- Connect the cables to the control system and make sure they are in position before fastening the control panel.
- Pre-mount the control panel in the lower position from where the lower panel was demounted.

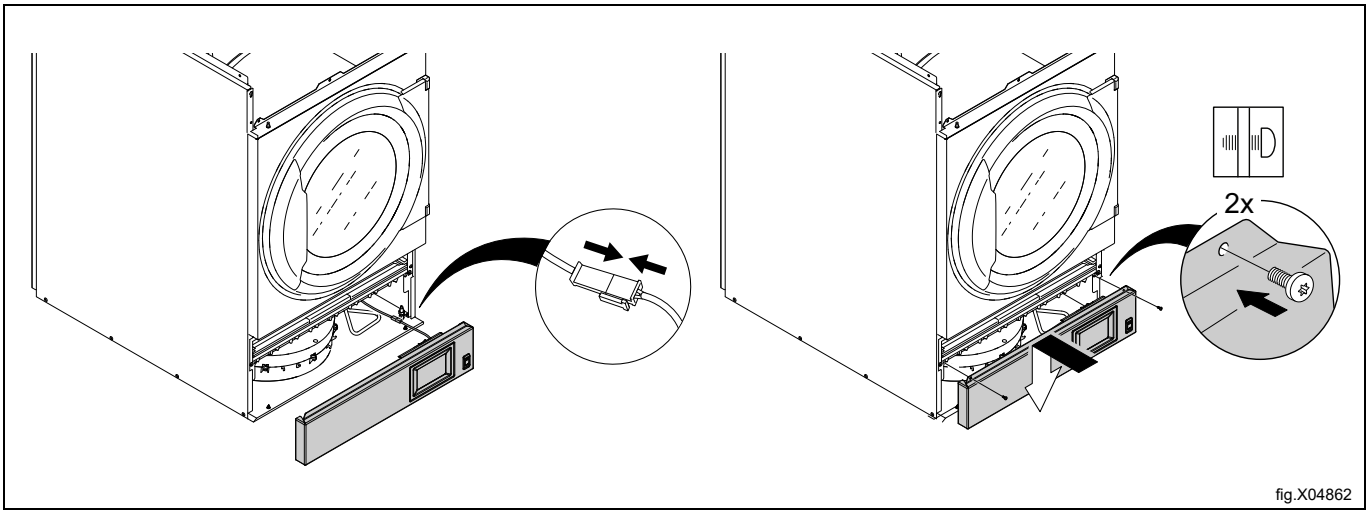

fig.X04862

- Remount the bracket and fasten the five screws completely.
- Insert the filter drawer.

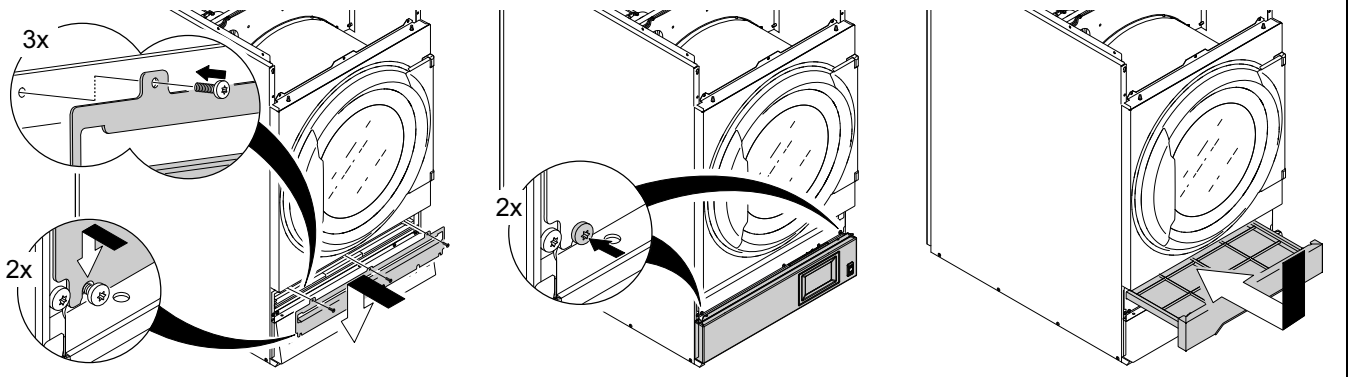

fig.X04863

- Mount the lower panel where the control panel was positioned before and tighten the two screws completely.

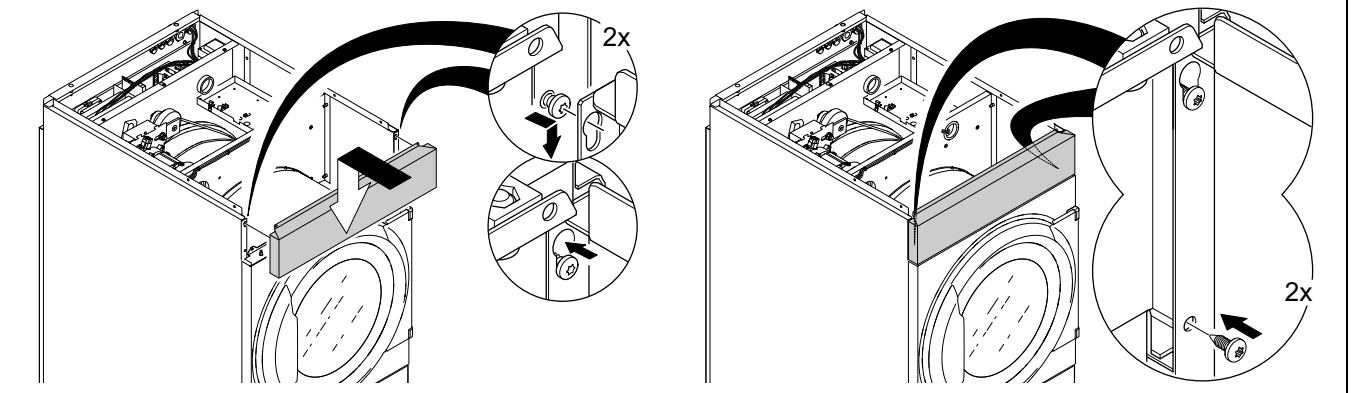

fig.X04864

- Remount the top panel.

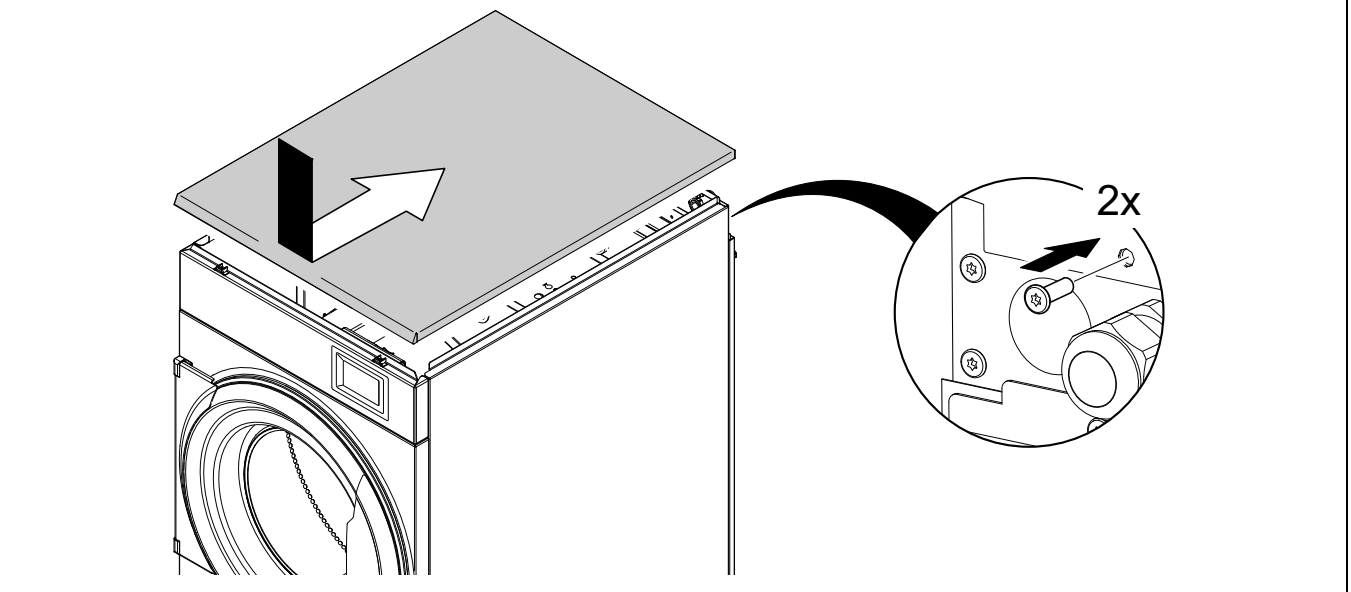

fig.X04592A

- On the tumble dryer that shall be placed on top of the lower tumble dryer; demount the 3 screws (G) at the lower part of the side panel, do the same on both sides.

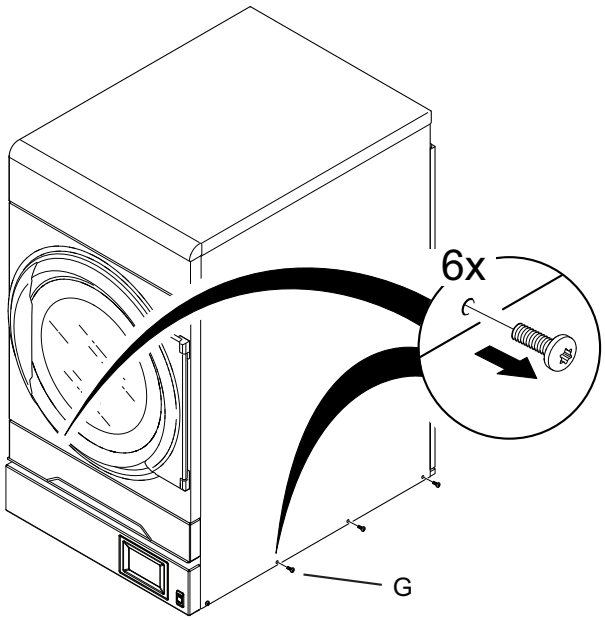

fig.X04865A




It is strongly recommended to wear gloves since there can be sharp edges.
The weight is 97 kg for an electric- or gas heated tumble dryer and 119 kg for a tumble dryer with heat pump. To reduce weight of a tumble dryer with heat pump it is recommended to remove the heat pump unit before lifting the tumble dryer.

- Lift the tumble dryer by holding it according to the figure.

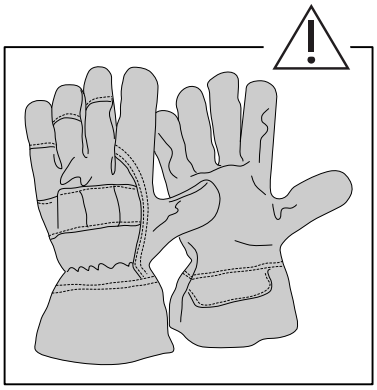
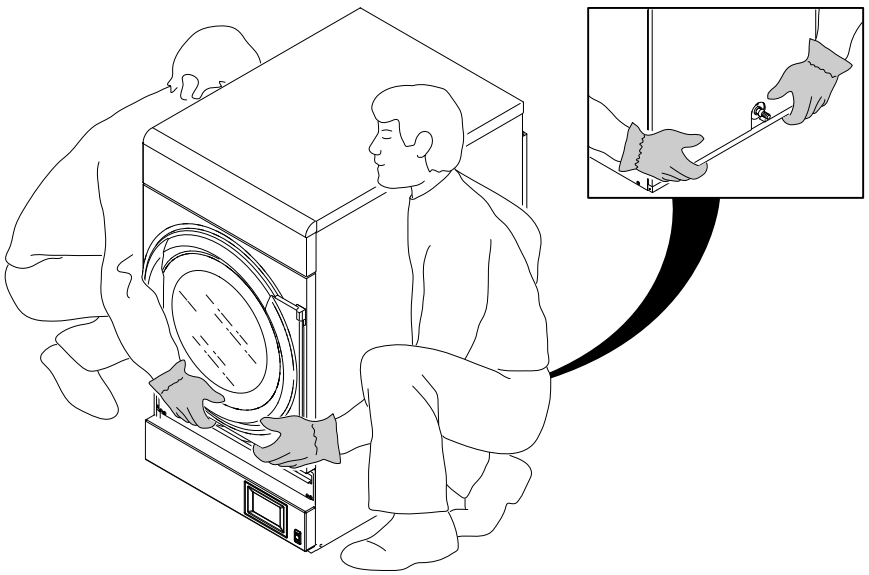

fig.X04866

- Lift and put the tumble dryer on top of the washer extractor.
- The tumble dryer should be aligned to the screw holes.

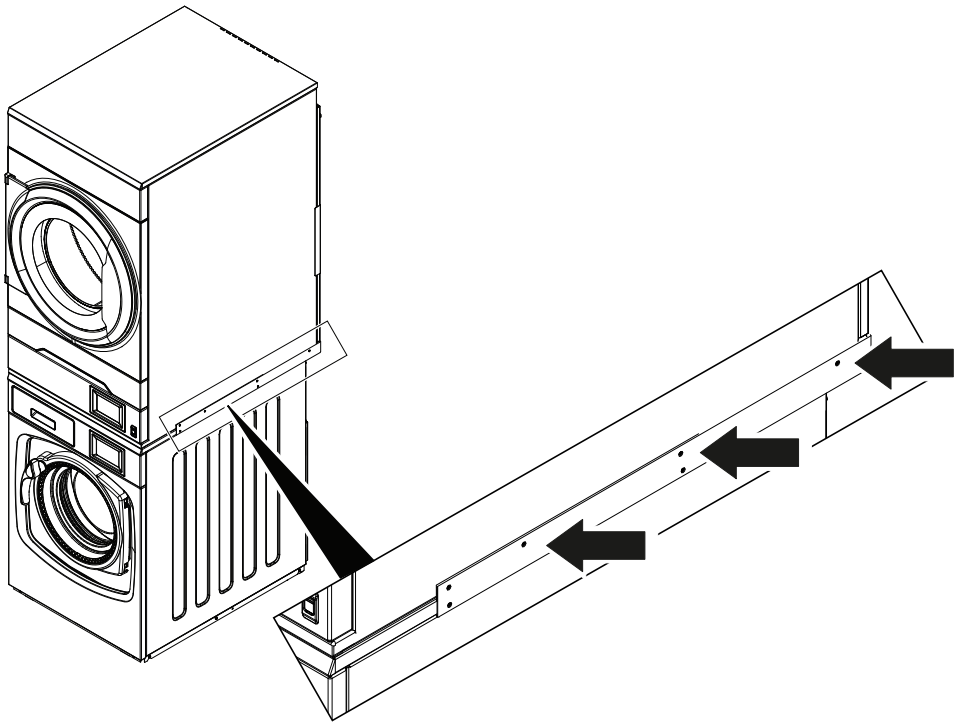

fig.X04867A

- When the tumble dryer is aligned, remount the 3 screws (G).

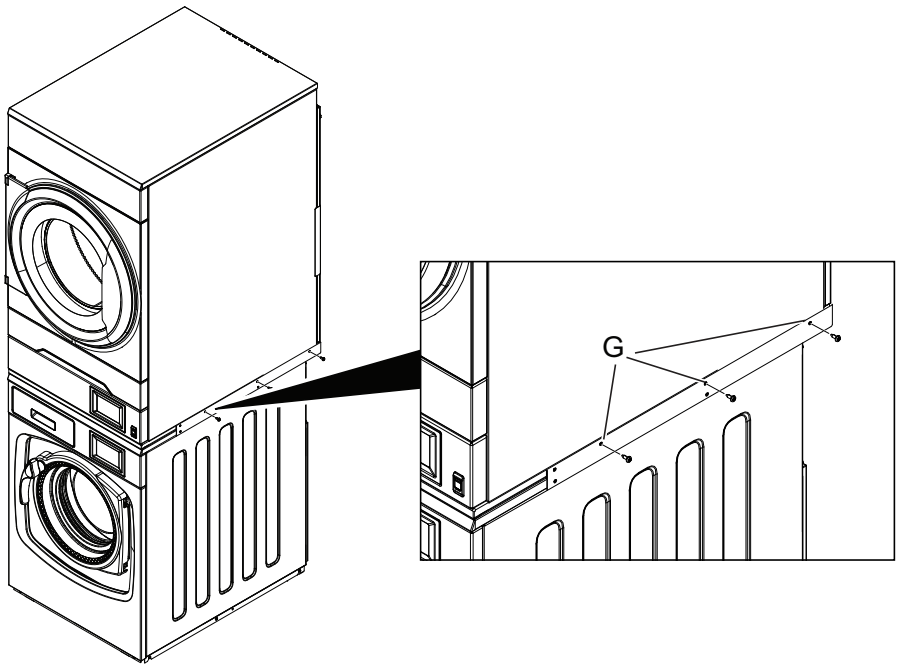

fig.X04868A

When all previous steps are done, the other stacking panel can be mounted on the machine in similar procedure.

Note that it does not matter which side / stacking panel you start with. This instruction shows start from the right side (seen from the front of the machine).

- Position the distances to the drilled holes on the top panel of the washer extractor. (They shall be underneath the stacking panel).
- Carefully tilt the upper tumble dryer just a little bit and slide the other stacking panel under it. Make sure it is in position.

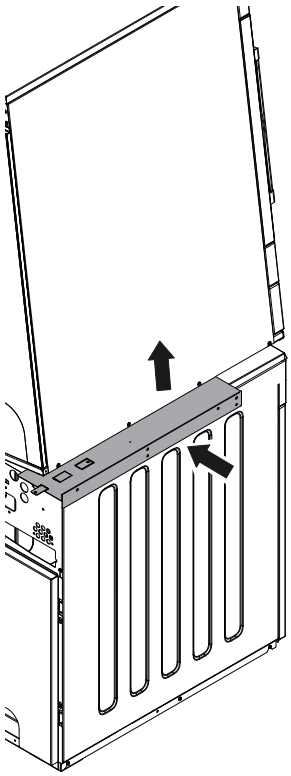

fig.X04869A

- Make sure the tumble dryer is aligned and remount the 3 screws (G).

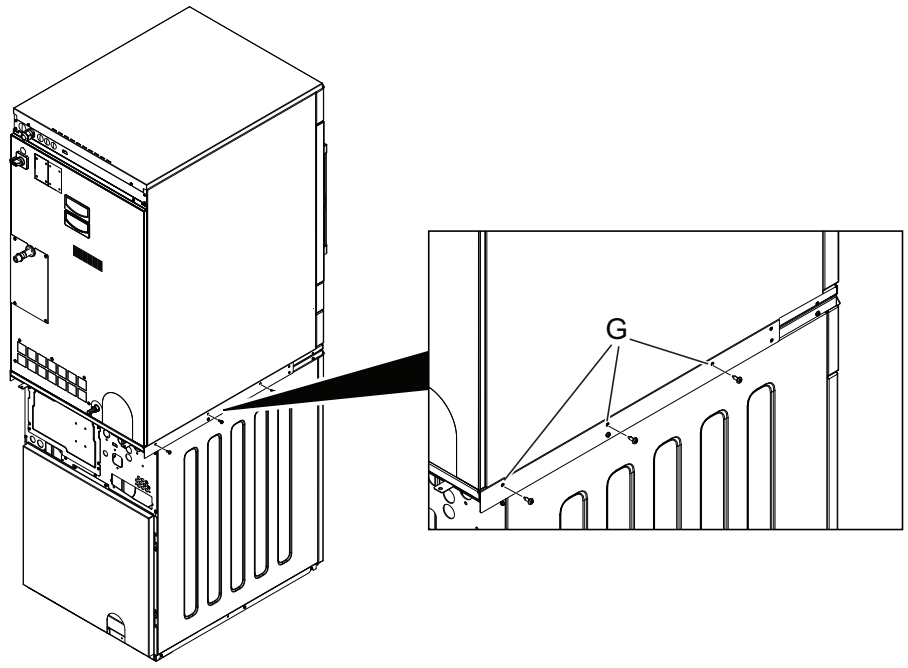

fig.X04870A

- Connect the power and perform a function test on the machines.

Note!

The machine must be secured to the floor when it is installed on a ship, oil rig or wherever there is a high risk of earthquake.
The secure brackets kit (487193545) is an alternative solution and it can be ordered separately.

11 Function check




May only be carried out by qualified personnel.

A function check must be made when the installation is finished and before the machine can be ready to be used.
Whenever a repair has been made, a function check must be performed before the machine can be used again.

11.1 Check the automatic stop of the machine

- Start the machine.
- Check if the micro switches are working properly:
  The machine must stop if the door is opened.

11.2 Check the direction of rotation (only on machines with 3–phase power supply, marine installation)

Demount the top panel and start a program. Check that the drum rotation is clockwise.

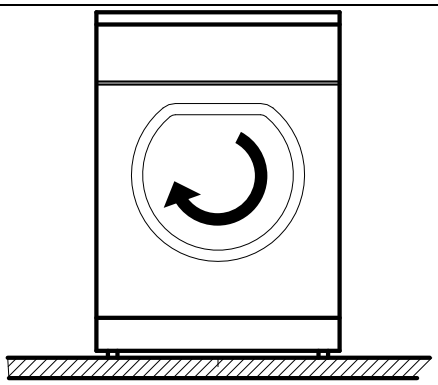

fig.W00200

If the direction is wrong, swap two of the three phases to the left on the connection terminal.

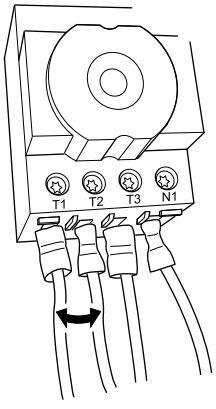

fig.7119

11.3 Check the heat

- Let the machine work for five minutes on a program with heat.
- Check that the heating is working by opening the door and feel if there is heat in the drum.

11.4 Ready to use

If all tests are OK the machine is now ready to be used.

If some of the tests failed, or deficiencies or errors are detected, please contact your local service organisation or dealer.

12 Disposal information

12.1 Appliance recyclability and disposal

12.1.1 Recyclability

Our appliances are manufactured using a significant percentage of recyclable metals (such as stainless steel, iron, aluminium, galvanized sheet, copper, etc.), which can be recovered through the local recycling systems, in compliance with the regulations in force in the country of use.

National regulations regarding waste disposal may vary. Disposal of the appliance must therefore be carried out in accordance with the applicable legislation and the directives issued by the competent authorities in the country where the appliance is decommissioned.

The components of the appliance must be separated and disposed of in accordance with their material composition (e.g. metals, oils, greases, plastics, rubber, refrigerant gases, insulating boards and other insulating material, glass wool, LEDs, etc.) and in full compliance with applicable local and international waste management regulations.

Compressors may contain oils and refrigerants fluids - are special waste and has to be recycled on local bases regulations.

12.1.2 Procedure regarding appliance disposal and component / material recovery

This product should not simply be disposed of in the environment at the end of its life cycle; it is imperative instead either to dispose of it in accordance with local environmental regulations, or, preferably, to deliver it whole to an authorized recycling center.

All removed components, including doors and other structural parts, must be delivered together with the appliance to an authorized recycling or dismantling facility.

The dismantling/recycling center will apply state of the art technologies and methods available to them to effectively disassemble the products for best recyclability.

Note that printed circuit boards, electrical motors or other components identified in European Union legislation to be of high critical raw materials recovery potential need to be addressed specifically.

In case of doubts or questions, always refer to your reference customer care service.

Before disposing of the appliance, carefully inspect its physical condition and preservation state, checking for potential leaks of liquids or gases, as well as for broken parts that may pose hazards during handling and subsequent dismantling.



The symbol on the product indicates that this product should not be treated as domestic waste, but must be correctly disposed of in order to prevent any negative consequences for the environment and human health. For further information on the recycling of this product, contact the local dealer or agent, the customer care service or the local body responsible for waste disposal.

Note!

When dismantling the appliance, any marking, this manual and other documents concerning the appliance must be destroyed.

12.2 Disposal of packing

The packing must be disposed of in compliance with the current regulations in the country where the appliance is used. All the packing materials are environmentally friendly.

They can be safely kept, recycled or burned in an appropriate waste incineration plant. Recyclable plastic parts are marked as following examples.

 PE	Polyethylene: • Outer wrapping • Instructions bag
 PP	Polypropylene: • Straps
 PS	Polystyrene foam: • Corner protectors



Electrolux Professional AB
341 80 Ljungby, Sweden
www.electroluxprofessional.com