User manual
Washer extractor

WH6–6

Type W.55H..

Electrolux PROFESSIONAL

Original instructions

438917890/GB, IE
2026.03.25

Contents

1 Safety Precautions 5
1.1 General safety information 6
1.2 Commercial use only 6
1.3 Copyright 6
1.4 Ergonomics certification 6
1.5 Symbols 7
2 Warranty terms and exclusions 8
3 Program description 9
3.1 General 9
3.2 Program description 9
3.3 Option buttons 11
4 Handling 12
4.1 Load 12
4.2 Detergent 12
4.3 How to start the machine 12
4.3.1 AHL and General 13
4.3.2 Mop 14
4.3.3 Hygiene 16
4.3.4 Restaurant 17
4.3.5 Camping 18
4.3.6 Coin operated machines 19
4.4 Additional functions 20
4.5 When program has ended 21
5 Timer 22
6 Error codes 23
7 Maintenance 24
7.1 General 24
7.2 Time for maintenance 24
7.3 Every day 24
7.4 Detergent container 25
7.4.1 Deliming 25
7.5 Drain 26
7.6 Water inlet 27
7.7 Maintenance to be carried out by qualified service personnel 27
8 Disposal information 28
8.1 Appliance recyclability and disposal 28
8.1.1 Recyclability 28
8.1.2 Procedure regarding appliance disposal and component / material recovery 28
8.2 Disposal of packing 28

The manufacturer reserves the right to make changes to design and component specifications.

1 Safety Precautions

- Servicing shall be carried out only by authorized personnel.
- Only authorized spare parts, accessories and consumables shall be used.
- Only use detergent intended for water-wash of textiles. Never use dry cleaning agents.
- The machine shall be connected with new water hoses. Re-used water hoses must not be used.
- The machine's door lock must under no circumstances be bypassed.
- If the machine develops a fault, this must be reported to the person in charge as soon as possible. This is important both for your safety and that of others.
- DO NOT MODIFY THIS APPLIANCE.
- When performing service or replacing parts, the power must be disconnected.
- When the power is disconnected, the operator must see that the machine is disconnected (that the plug is removed and remains removed) from any point to which he has access. If this is not possible, due to the construction or installation of the machine, a disconnection with a locking system in the isolated position shall be provided.
- In accordance with the wiring rules: mount a multi-pole switch prior to the machine to facilitate installation and service operations.
- If different rated voltages or different rated frequencies (separated by a /) are stated at the machine data plate, instructions for adjusting the appliance for operation at the required rated voltage or rated frequency are stated in the installation manual.
- Stationary appliances not fitted with means for disconnection from the supply mains having a contact separation in all poles that provide full disconnection under overvoltage category III, means for disconnection must be incorporated in the fixed wiring in accordance with the wiring rules.
- The openings in the base, shall not be obstructed by a carpet.
- Maximum mass of dry cloth: 6 kg.
- A-weighted emission sound pressure level at working stations:
  - Wash: <70 dB(A).
  - Extraction: <70 dB(A).
- Maximum inlet water pressure: 1000 kPa
- Minimum inlet water pressure: 50 kPa
- Additional requirements for the following countries; AT, BE, BG, HR, CY, CZ, DK, EE, FI, FR, DE, GR, HU, IS, IE, IT, LV, LT, LU, MT, NL, NO, PL, PT, RO, SK, SI, ES, SE, CH, TR, UK:
  - The appliance can be used in public areas.
  - This appliance can be used by children aged from 8 years and above and persons with reduced physical, sensory or mental capabilities or lack of experience and knowledge if they have been given supervision or instruction concerning use of the appliance in a safe way and understand the hazards involved. Children shall not play with the appliance. Cleaning and user maintenance shall not be made by children without supervision.
  - Children of less than 3 years should be kept away unless continuously supervised.
- Additional requirements for other countries:
  - This appliance is not intended for use by persons (including children) with reduced physical, sensory or mental capabilities, or lack of experience and knowledge,

unless they have been given supervision or instruction concerning use of the appliance by a person responsible for their safety. Children should be supervised to ensure that they do not play with the appliance.

– This appliance is not intended for use in household applications but is intended for use in similar applications such as: staff kitchen areas in shops, offices and other working environments, farm houses, by clients in hotels, motels and other residential type environments, bed and breakfast type environments, areas for communal use in blocks of flats or in launderettes.

1.1 General safety information

The machine is only intended for water-wash use.

Do not hose down the machine with water.

In order to prevent damage to the electronics (and other parts) that may occur as the result of condensation, the machine should be placed in room temperature for 24 hours before being used for the first time.

1.2 Commercial use only

The machine/machines covered by this manual is/are made for commercial and industrial use only.

1.3 Copyright

This manual is intended solely for consultation by the operator and can only be given to third parties with the permission of Electrolux Professional AB company.

1.4 Ergonomics certification

The human body is designed for movement and activity but physical stress injuries as a result of static and repetitive movements or unfavorable working postures may occur.

The ergonomic features of your product, the ones which may influence your physical and cognitive interaction with it, have been assessed and certified.

A product which exhibits ergonomic features, in fact, shall fulfil specific ergonomic requirements, belonging to three different areas: Polytechnic, Biomedical and Psychosocial (usability and satisfaction).

For each of these areas, specific tests with real users have been performed. The product was therefore compliant with the ergonomic acceptability criteria requested by the standards.

In case several machines are managed by the same operator the repetitive movements will increase and as a consequence of this the related biomechanical risk will increase exponentially.

The possible postural risks are the interaction with the door handle in case the machine is not placed on a base.

Follow the below recommendations to avoid, as much as possible, operators acquiring bodily injury.

- Place the machine on a base instead of directly on the floor so that the operator does not need to bend his/her back unnecessarily when loading and unloading.
  Minimum suggested height of bases is 300 mm.
- Make sure there are suitable trolleys or baskets for loading, unloading and transportation.
- Organize job rotation in the working place in the case several machines are managed by the same operator.

1.5 Symbols

	Caution
	Caution, high voltage
	Read the instructions before using the machine

2 Warranty terms and exclusions

If the purchase of this product includes warranty coverage, warranty is provided in line with local regulations and subject to the product being installed and used for the purposes as designed, and as described within the appropriate equipment documentation.

Warranty will be applicable where the customer has used only genuine spare parts and has performed maintenance in accordance with Electrolux Professional AB user and maintenance documentation made available in paper or electronic format.

Electrolux Professional AB strongly recommends using Electrolux Professional AB approved cleaning, rinse and descaling agents to obtain optimal results and maintain product efficiency over time.

The Electrolux Professional AB warranty does not cover:

- service trips cost to deliver and pick up the product;
- installation;
- training on how to use/operate;
- replacement (and/or supply) of wear and tear parts unless resulting from defects in materials or workmanship reported within one (1) week from the failure;
- correction of external wiring;
- correction of unauthorized repairs as well as any damages, failures and inefficiencies caused by and/or resulting from;
  - insufficient and/or abnormal capacity of the electrical systems (current/voltage/frequency, including spikes and/or outages);
  - inadequate or interrupted water supply, steam, air, gas (including impurities and/or other that does not comply with the technical requirements for each appliance);
  - plumbing parts, components or consumable cleaning products that are not approved by the manufacturer;
  - customer’s negligence, misuse, abuse and/or non-compliance with the use and care instructions detailed within the appropriate equipment documentation;
  - improper or poor: installation, repair, maintenance (including tampering, modifications and repairs carried out by third parties not authorized third parties) and modification of safety systems;
  - Use of non-original components (e.g.: consumables, wear and tear, or spare parts);
  - environment conditions provoking thermal (e.g. overheating/freezing) or chemical (e.g. corrosion/oxidation) stress;
  - foreign objects placed in- or connected to- the product;
  - accidents or force majeure;
  - transportation and handling, including scratches, dents, chips, and/or other damage to the finish of the product, unless such damage results from defects in materials or workmanship and is reported within one (1) week of delivery unless otherwise agreed;
- product with original serial numbers that have been removed, altered or cannot be readily determined;
- replacement of light bulbs, filters or any consumable parts;
- any accessories and software not approved or specified by Electrolux Professional AB.

Warranty does not include scheduled maintenance activities (including the parts required for it) or the supply of cleaning agents unless specifically covered within any local agreement, subject to local terms and conditions.

Check on Electrolux Professional AB website the list of authorized customer care.

3 Program description

3.1 General

The machine is equipped with a number of programs adapted to the range of use to which the machine is intended — different segments use different programs. The following program description is a short description of some examples of programs that can be used.

It is recommended to follow the care labelling of the garment as far as possible.

3.2 Program description

The following table shows some examples of available programs and a short description of those:

Program	Description
NORMAL COLOUR	Cotton and terry. Different temperatures can be selected. 30°C - 60°C. Detergent without bleach should be used. For an optimal result, full load is recommended.
NORMAL WHITE	Cotton and terry. Different temperatures can be selected. 40°C - 95°C. Detergent with bleach should be used. For an optimal result, full load is recommended.
MILD	Synthetic (example of synthetic fabrics: polyester, polyamide, polyacrylic and elastan), viscose, polycotton and delicate fabrics. Different temperatures can be selected. 40°C - 60°C. For an optimal result, half load is recommended.
DELICATE	Synthetic (example of synthetic fabrics: polyester, polyamide, polyacrylic and elastan), viscose, polycotton and delicate fabrics. 30°C. For an optimal result, half load is recommended.
HANDWASH	Very delicate fabrics. For an optimal result, only a few items is recommended.
WOOL	Wool fabrics. 40°C. For an optimal result, only a few items is recommended.
RINSE	Used for rinse and extraction.
HYGIEN	A program which removes dust mites and the like. This program can also be used for sanitation of for example bed bugs. 60°C.
DRUM RINSE	Used for rinse the drum and all compartments. Used with empty drum.

The following table shows some examples of different groups of programs that are used for special markets such as hospitals, restaurants, farms etc. and a short description of those:

Group of program	Description
General	Programs for normal household textiles and textiles in hotels and restaurants.
Mop	Programs for mops. Programs for workwear. Special mop program for microfibres.
Hygiene	Hygiene programs to meet the demands and recommendations of standards in different countries.
Farm	Programs for udder towels. Programs for workwear.
Camping	Short programs designed for slightly and normally soiled textiles.
Quick service restaurants	Programs for mops. Programs for workwear. Programs for fatty clothes

The following table shows some examples of available programs used on coin operated machines and a short description of those:

Program	Description
COLD	Cotton and terry. 40°C. For an optimal result, full load is recommended.
WARM	Cotton and terry. 60°C. For an optimal result, full load is recommended.
HOT	Cotton and terry. 95°C. For an optimal result, full load is recommended.
MILD	Synthetic (example of synthetic fabrics: polyester, polyamide, polyacrylic and elastan), viscose, polycotton and delicate fabrics. 40°C. For an optimal result, only a few items is recommended.
DELICATE	Delicate fabrics. 30°C. For an optimal result, only a few items is recommended.

3.3 Option buttons

The machine is equipped with a number of options adapted to the range of use to which the machine is intended — different markets use different options.

The following table shows some examples of available options and a short description of those:

Option button		Description
	ECO	Washes using less water and energy. Eco friendly wash for normally soiled textiles.
	HEAVY SOIL	Long wash for heavy soiled textiles.
	QUICK	Short wash for light soiled textiles. The program will be ready as quick as possible.
	PREWASH	One pre-wash is added.
	EXTRA RINSE	One rinse is added.
STOP	RINSE STOP	The program will pause before the last rinse.
	PRERINSE	Pre rinse(s) added.
	NO SOFTENER	On machines with automatic detergent dosing system. Push the button to select function: One push = No softener is added. Two pushes = No softener or detergent is added. Three pushes = Both softener and detergent is added.
	EXTRACTION	Different extraction times can be selected.
	GENTLE EXTRACTION	No extraction between rinses and short end extraction. For synthetics/blended textiles.

4 Handling

4.1 Load

Load the goods into the machine according to recommendations and close the door.
The recommended maximum load is 6 kg.

4.2 Detergent

Add the correct amount of detergent and softener according to recommendations.
(Not valid if automatic detergent dosing is used).

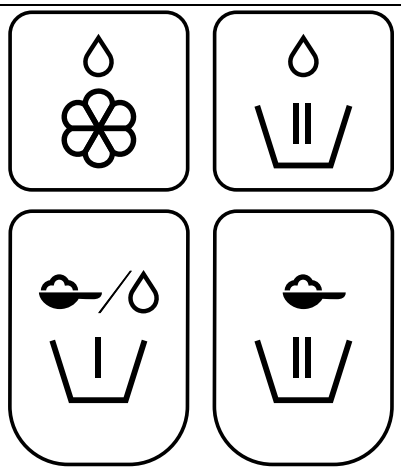

fig.X00963

	Softener, liquid.
	Main wash for liquid detergent. Alt. for mop machines, liquid mop chemicals in last rinse.
	Pre-wash, powder or liquid detergent, if option “pre-wash” has been selected.
	Main wash for powder detergent.

4.3 How to start the machine

This manual cover different types of machine models. Check the panel on your machine and follow the description for your type of machine.

4.3.1 AHL and General

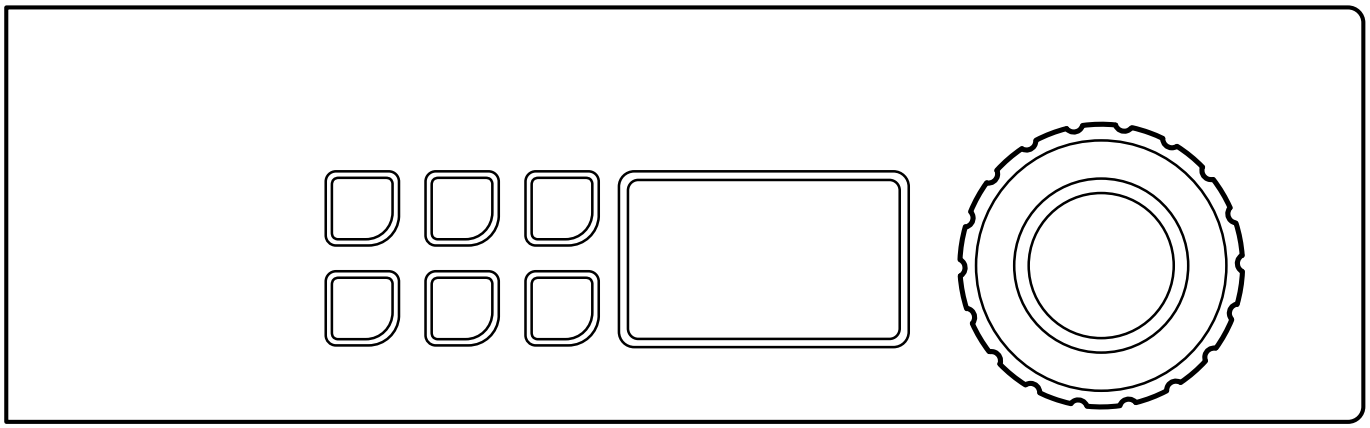

Select program by turning the control knob.

It is also possible to select one of the wash triangle options and/or other options.

Note!

Some programs do not allow options.

Example of programs	Wash triangle options		Example of other options	
NORMAL COLOUR Different temperatures can be selected. 30°C - 60°C. NORMAL WHITE Different temperatures can be selected. 40°C - 95°C. MILD Different temperatures can be selected. 40°C - 60°C.		ECO		PREWASH
		HEAVY SOIL		EXTRA RINSE
		QUICK		NO SOFTENER

Start the machine by pressing the control knob.

The machine will start by weighing the load with an extraction. The program will then adapt to the load to give an optimal result.

4.3.2 Mop

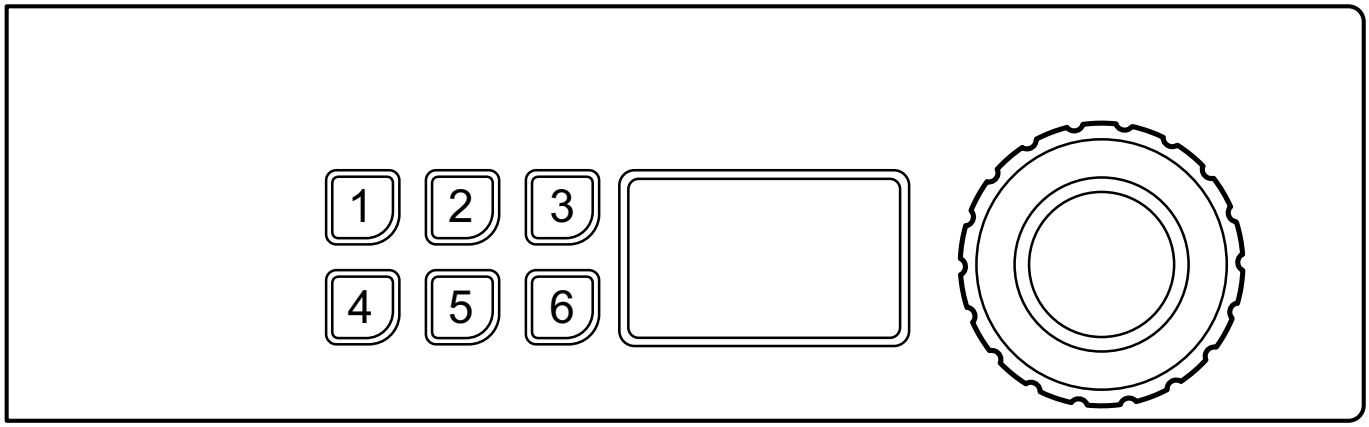

Select program by turning the control knob or select program with the quick selection buttons (if some of the buttons are programmed with this function).

It is also possible to select options (if some of the buttons are programmed with this function).

Note!
Some programs do not allow options.

Example of programs	Example of options programmed in the buttons	
MICROFIBRE 90 MOP 85 RINSE	1	PRERINSE
	2	PREWASH
	3	EXTRACTION 10 sec.
	4	EXTRACTION 15 sec.
	5	EXTRACTION 30 sec.
	6	EXTRACTION 45 sec.

Start the machine by pressing the control knob.

Buttons

The buttons 1 and 2 on the panel can be programmed to be option buttons, quick selection buttons (used to select a program) or both.
The buttons 3–6 on the panel are always used as option buttons and can not be changed.

At delivery the buttons are programmed to work as options buttons.

The function of the buttons can be changed at any time. Information on how to program the buttons can be found in the Programming and configuration manual and should only be done by a skilled/authorized person.

4.3.3 Hygiene

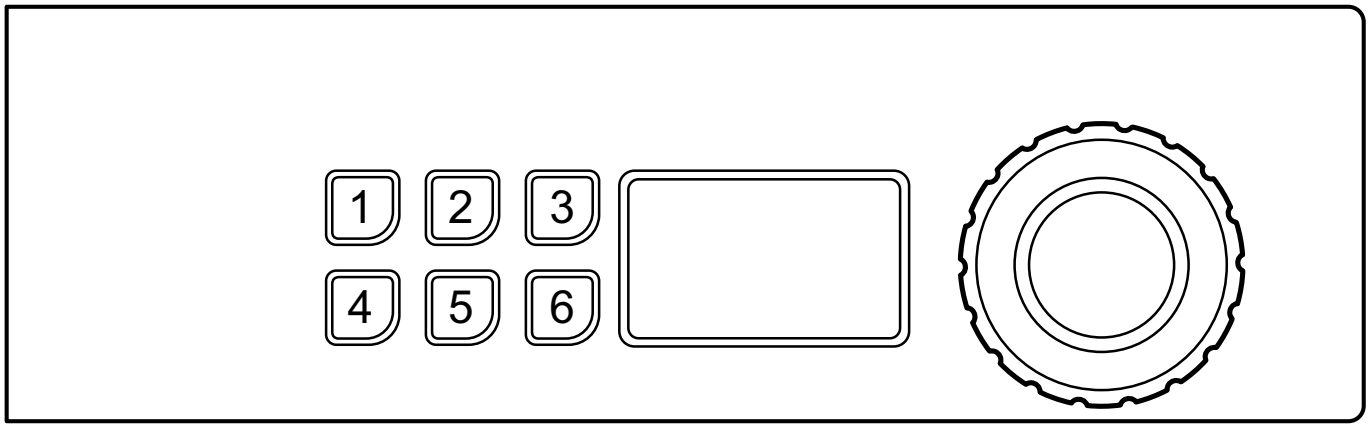

Select program by turning the control knob or select program with the quick selection buttons (if some of the buttons are programmed with this function).

It is also possible to select options (if some of the buttons are programmed with this function).

Note!
Some programs do not allow options.

Example of programs	Example of options programmed in the buttons	
NORMAL Different temperatures can be selected. 40°C - 95°C. MILD Different temperatures can be selected. 40°C - 60°C. HANDWASH	1	PRERINSE
	2	PREWASH
	3	EXTRA RINSE

Start the machine by pressing the control knob.

Buttons

The buttons on the panel can be programmed to be option buttons, quick selection buttons (used to select a program) or both.

At delivery the buttons are programmed to work as options buttons.

The function of the buttons can be changed at any time. Information on how to program the buttons can be found in the Programming and configuration manual and should only be done by a skilled/authorized person.

4.3.4 Restaurant

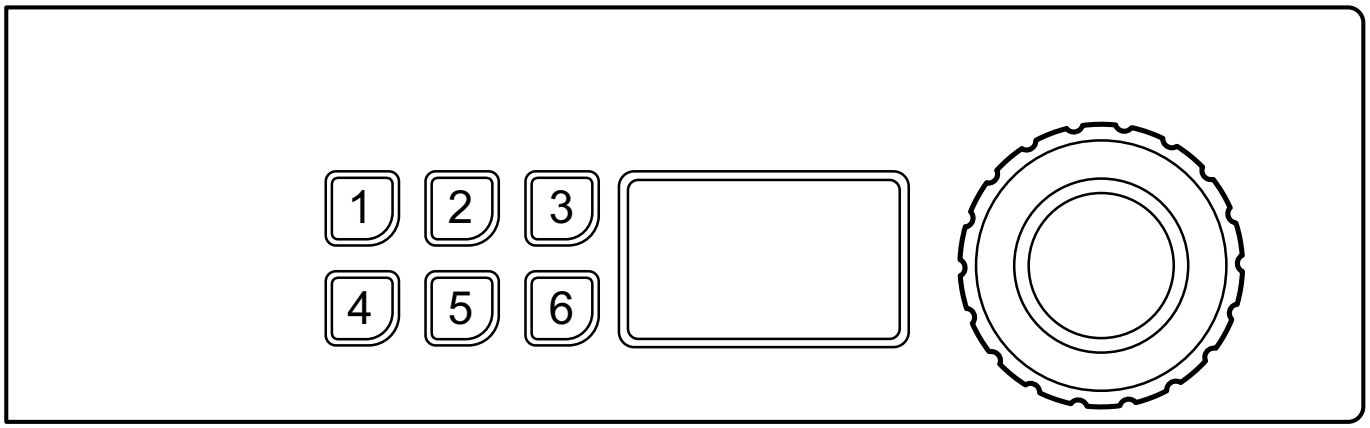

Select program by turning the control knob or select program with the quick selection buttons.

Example of programs	
1	MICROFIBRE 90
2	WHITE Different temperatures can be selected. 60°C - 95°C.
3	DELICATE 30

Start the machine by pressing the control knob.

Buttons

The buttons 1–6 on the panel are programmed to be quick selection buttons (used to select a program).

The function of the buttons can be changed at any time. Information on how to program the buttons can be found in the Programming and configuration manual and should only be done by a skilled/authorized person.

4.3.5 Camping

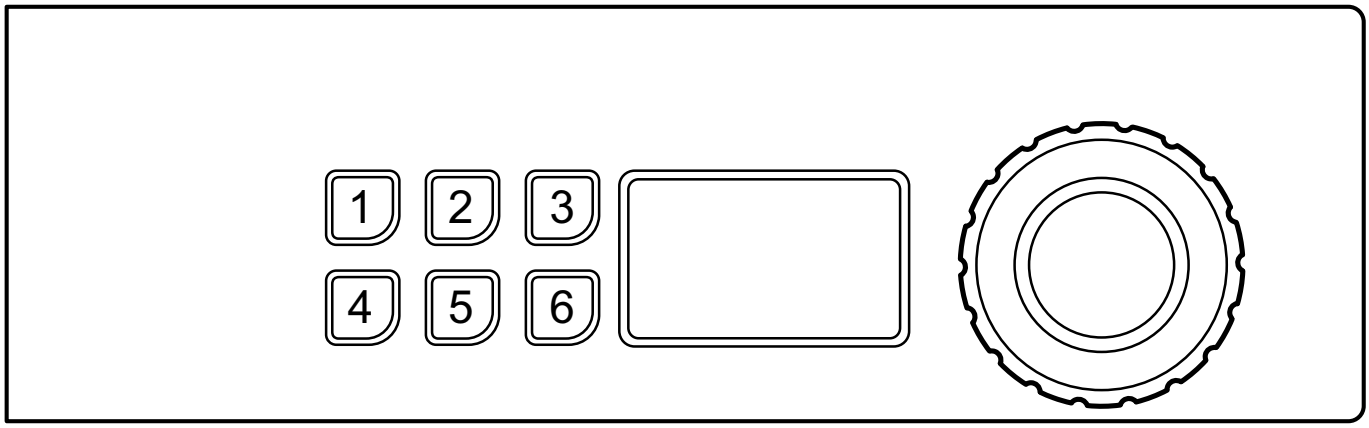

Select program by turning the control knob or select program with the quick selection buttons.

Example of programs	
1	NORMAL Different temperatures can be selected. 30°C - 95°C.
2	MILD 40
3	DELICATE 30

Start the machine by pressing the control knob.

Buttons

The buttons 1–6 on the panel are programmed to be quick selection buttons (used to select a program).

The function of the buttons can be changed at any time. Information on how to program the buttons can be found in the Programming and configuration manual and should only be done by a skilled/authorized person.

4.3.6 Coin operated machines

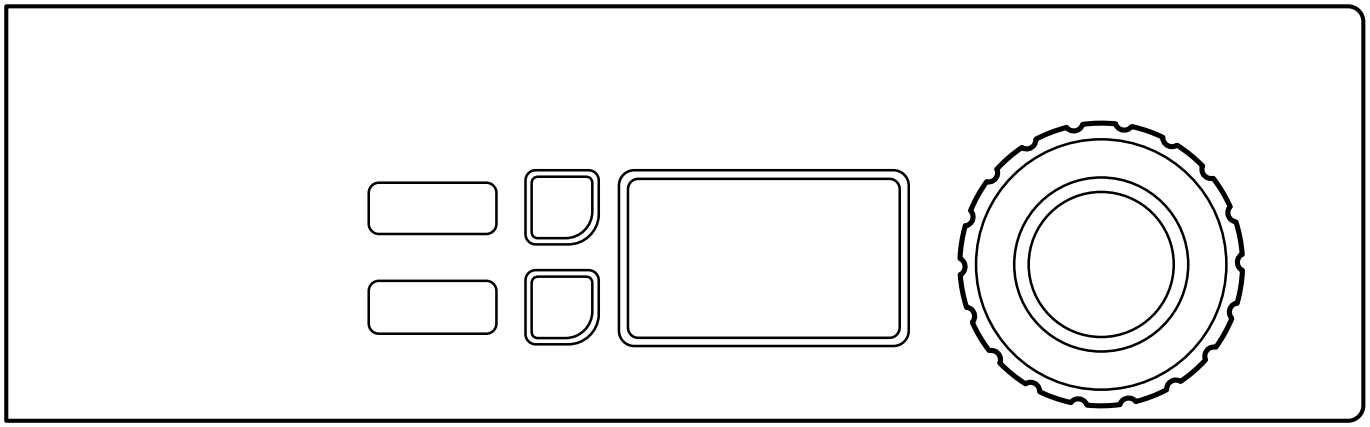

Select program by turning the control knob.

It is also possible to select options.

Note!

Some programs do not allow options.

Example of programs	Options	
COLD WARM HOT		HEAVY SOIL
		EXTRA RINSE

Insert correct amount of coins to start the machine. (On some machines you also need to press the control knob to start the machine).

4.4 Additional functions

There is a menu with additional functions available for selection after start. When pressing the control knob / start button (on machines without control knob) the menu will appear on the display.
Select from the menu by turning the control knob / pressing the temperature button/-s and press the control knob / start button to activate.

Note!

Some of the functions may not be available or active on your machine.

Stop function

If the machine is programmed with this function, it is possible to stop the machine during program run by pressing the control knob.

When pressing the control knob again the program will continue.

Pause

It is possible to pause an ongoing program.

Select PAUSE and activate.

When pressing the control knob / start button again the program will continue.

The door can be opened after a short while if the water level is not too high. Close the door and press the control knob / start button to continue.

Changing a program after start

It is possible to change a program after start.

Select CHANGE PROGRAM and activate.

When pressing the control knob / start button the program menu will be displayed. Select a new program and start by pressing the control knob / start button.

Rapid advance

Select RAPID ADVANCE and activate.

When pressing the control knob / start button a list with all program steps will be displayed. Select desired program step from the list by turning the control knob / pressing the temperature button/-s and press the control knob / start button to activate.

End a program

It is possible to end a program after start.

Select END PROGRAM and activate.

When pressing the control knob / start button the program will be ended. When the water is drained the door will be unlocked.

Delayed start

If the machine has this function, it is possible to delay the start of a program.

After program selection, press the control knob / start button. A menu will appear on the display. Turn the control knob / press the temperature button/-s to activate the function. Set the day and time for the delayed start with the control knob / pressing the temperature button/-s.

Press the control knob / start button to confirm the settings.

Status

Select STATUS MENU and activate.

The status menu shows the status for water temperature, water level and drum speed for the machine.

Statistics

Select STATISTICS and activate.

The statistics menu shows total run hours and trip run hours for the machine.

Auto restarts

Select AUTO RESTARTS and activate.

Set the number of automatic restarts that the machine will perform of the selected program.

Press the control knob / start button to confirm the settings.

4.5 When program has ended

Leave the door open when ready and do not close the detergent container all the way in (it shall be a bit open). This is to prevent that moisture stays in the machine and develop bacteria and mould.

5 Timer

The timer is used to start a part of the program (for example the last rinse of the udder cloth program) after pause on a pre-set time. The time can be set for all days or for selected days.

To program the timer you need to activate the machines service mode.

The service mode is activated by a long press on the control knob.

SERVICE MENU
FUNCTION TEST
CONFIGURATION
PRICE PROGRAMMING
STATISTICS
PROGRAM PARAMETERS
SYSTEM

The following menus are activated by a short press on the control knob.

Activate the PROGRAM PARAMETERS menu.

SERVICE MENU
FUNCTION TEST
CONFIGURATION
PRICE PROGRAMMING
STATISTICS
PROGRAM PARAMETERS
SYSTEM

Activate the SET START AFTER PAUSE menu.

Activate the ADD NEW OCCASION menu.

The display will now show the following submenus:

- BACK
- TIME
- ENABLED
- ALL DAYS
- MONDAY
- TUESDAY
- WEDNESDAY
- THURSDAY
- FRIDAY
- SATURDAY
- SUNDAY
- REMOVE OCCASION

Activate the TIME menu to program the time. Set the time by turning the control knob and save when ready.

Select from the list and activate the day/days one by one by pressing the control knob. A filled square indicates that the day is activated.

Press BACK to exit and save the changes by selecting YES.

Example:
The program is started the day before and will pause before the last rinse.
If the time is set to 04.00 and ALL DAYS is activated, this means that the last rinse on the program will be started at 04.00 all days of the week.

When saved, the programmed time — occasion, will be listed in the SET START AFTER PAUSE menu as a new row.

It is possible to program several times — occasions on the same day.

Up to 10 occasions can be saved in the list.

Press ENABLED to activate or deactivate the selected occasion.

Press REMOVE OCCASION to delete the selected occasion.

6 Error codes

A fault in the program or in the machine is indicated by an error code on the display.
Some of these error codes can be solved easily without contacting service personnel.

Error code	Text	Cause/Action
11:1	NO WATER	Water level acknowledgement not reached in time. Check that the water taps are open.
11:2	DOOR OPEN	Door position acknowledgement not received during program. Open and close the door.
11:3	DOOR LOCK FAIL	Door position acknowledgement not received in time. Open and close the door.
11:10	DRUM NOT DRAINED	Water level above established level after drain. Check that the drain is not blocked. Try to restart the machine.

For other error codes or repeated error codes, disconnect the power for 30 seconds. If the error code keeps coming back, contact authorized service personnel.

7 Maintenance

7.1 General

It is the responsibility of the owner of the machine/the laundry manager to make sure that maintenance is periodically performed.

Note!
Lack of maintenance may deteriorate the performance of the machine and may cause damage to components.

7.2 Time for maintenance

When the display is showing the message `TIME FOR MAINTENANCE` — contact the owner of the machine/the laundry manager to perform maintenance (if available, a telephone number and/or a tag will also be displayed).

The machine can be used meanwhile. However, the message will keep coming back until the service is performed.

The message will disappear after about 30 seconds or if the control knob or any button is pressed.

7.3 Every day

Check that the door is locked during a program. Make sure the door cannot be opened until after the program is complete.

If the door can be opened before program end, the machine must be placed out of order until repairs are made.

Check that the door does not leak.

Clean the door, door glass and door gasket.

Clean the exterial parts.

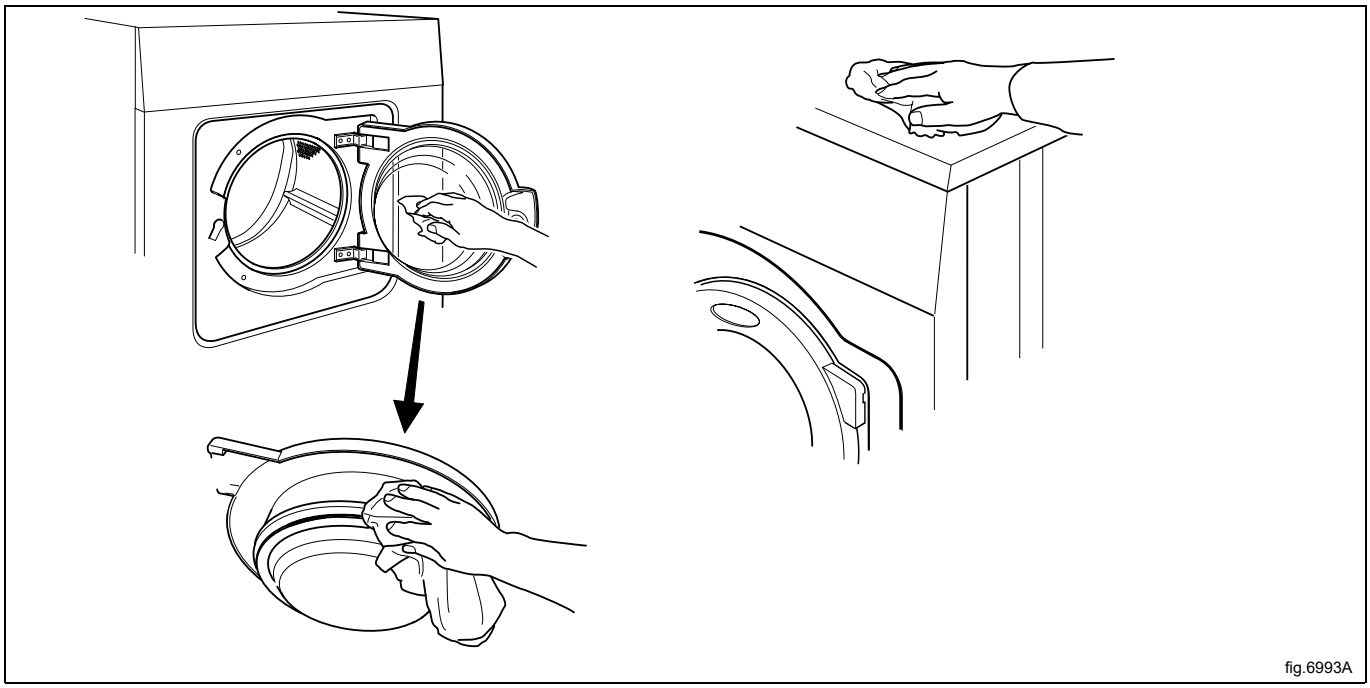

fig.6993A

7.4 Detergent container

Clean the detergent container at regular basis to avoid that it is being clogged by detergent residue.

Remove the detergent container from the machine. Remove the siphons (A) and clean the detergent container and siphons with hot water and for example a small brush. Also clean the plastic parts in the space where the detergent container was placed in the machine.

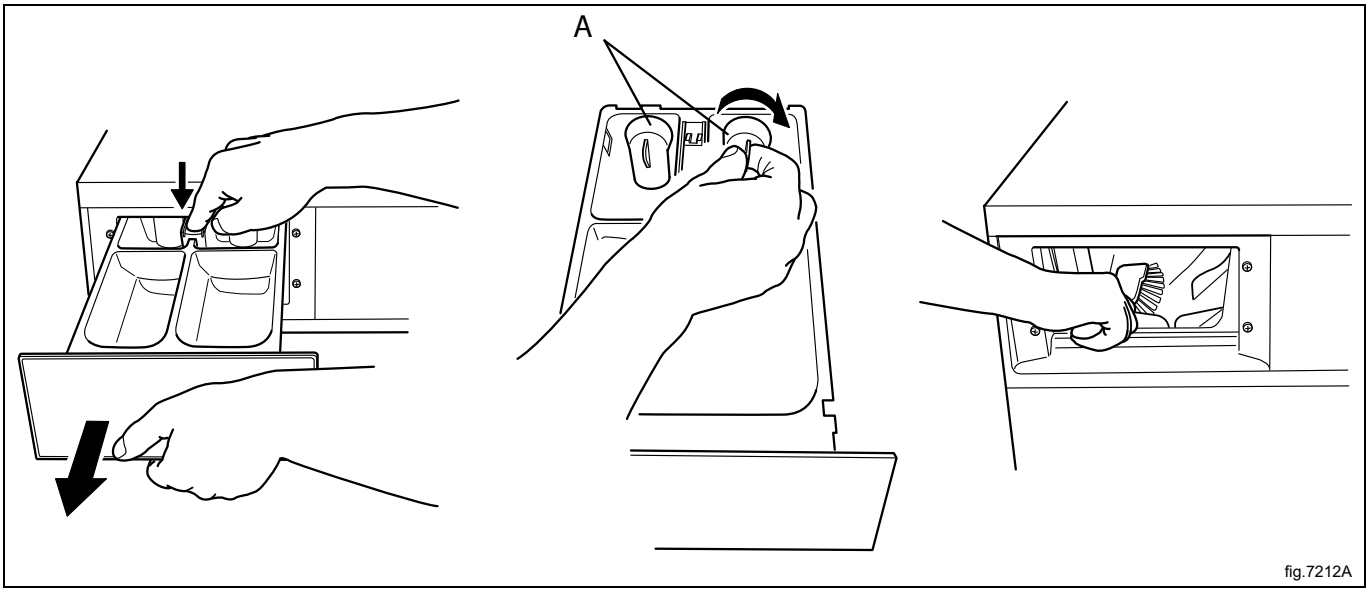

fig.7212A

Use a screwdriver or a similar tool to press against the inner walls on the spraying plate to clean from limescale.

Press carefully and not too hard since pressing too hard might damage the spraying plate.

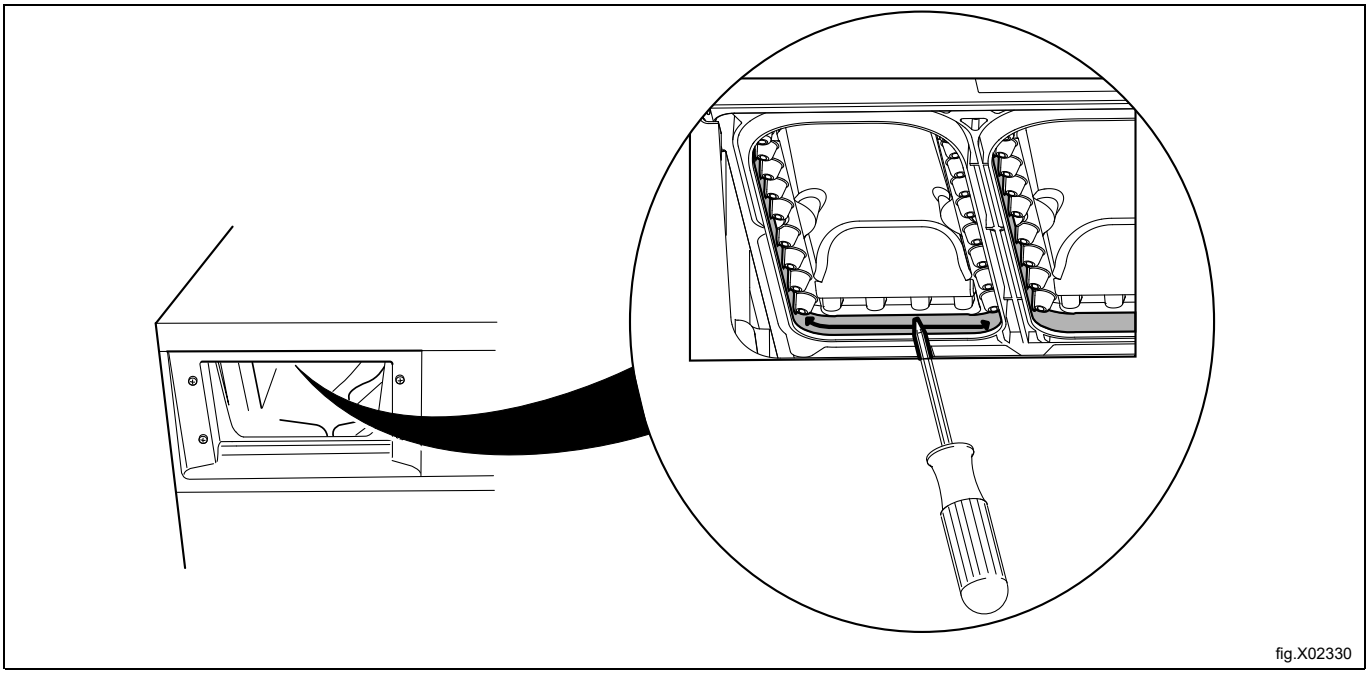

fig.X02330

7.4.1 Deliming

When deliming is needed:

Use the special machine cleaning program. If it is not available, contact authorized service personnel to get access to the program.

It is also possible to use a program with high temperature, 95°C, for deliming. Add a deliming agent, for example citric acid.

7.5 Drain

If the machine is equipped with a drain pump, check the drain pump at regular basis. Clean if necessary.

Open the door to the drain pump and pull out the hose. Remove the plug (A) to empty the drain into for example a baking plate or similar.

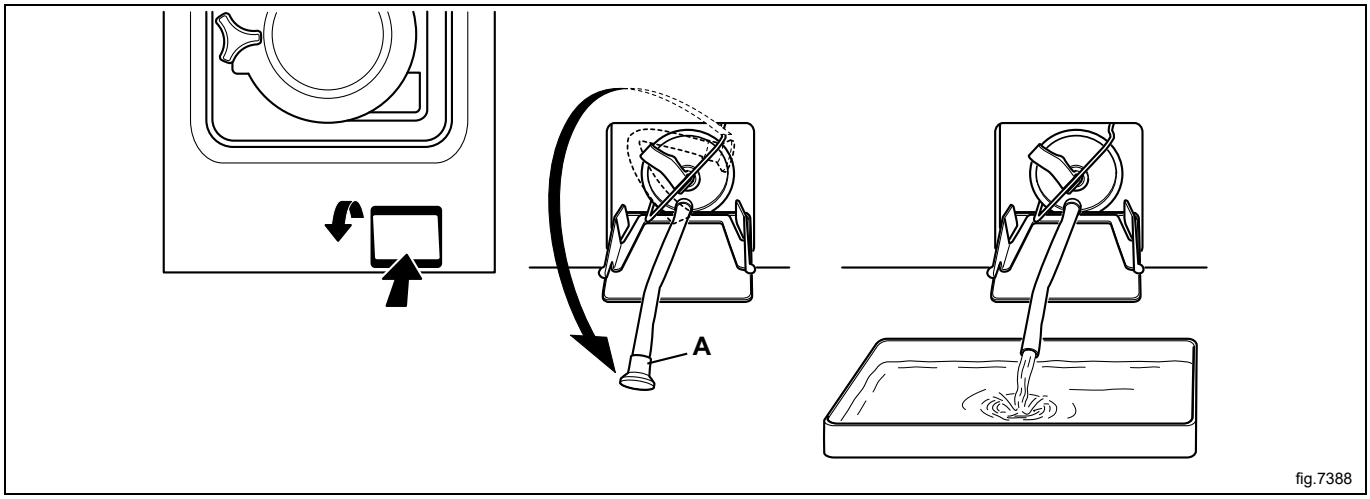

fig.7388

Pull the clamp upwards and pull out the filter parts. Clean the filter parts and the pump housing with for example a small brush.

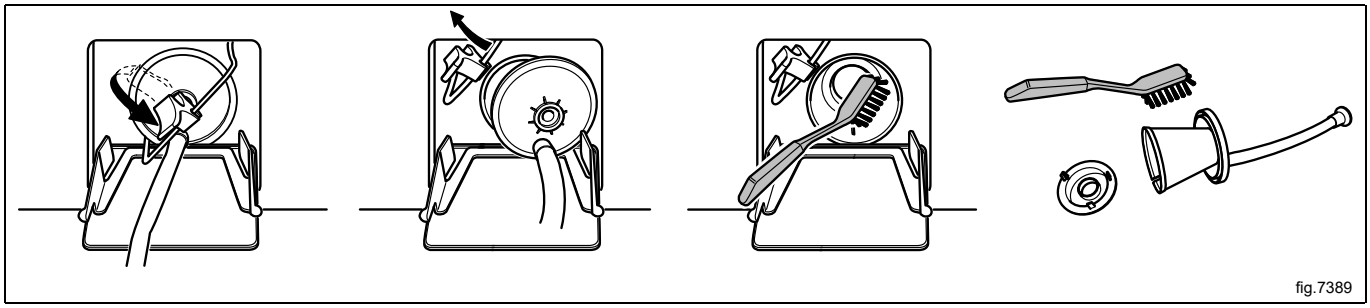

fig.7389

When remounting, place the cut on the filter part downwards when inserting it. Make sure the connections are tight.

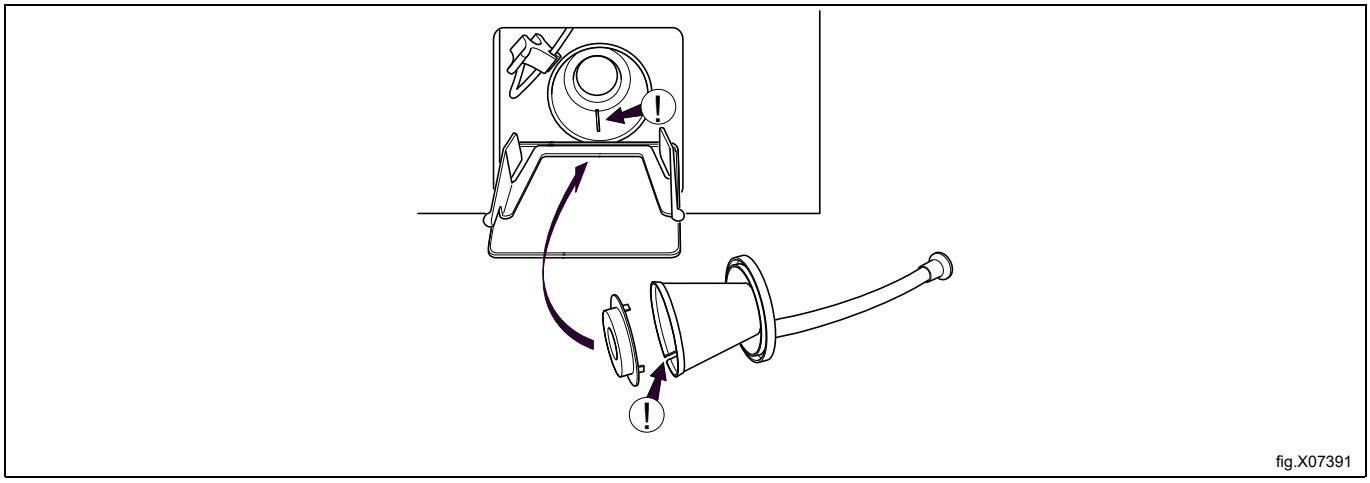

fig.X07391

At regular basis, check the drain connection, joints in the drain pipe etc and remove any lint and dust. Clean with for example a small brush. When remounting, make sure the connections are tight.

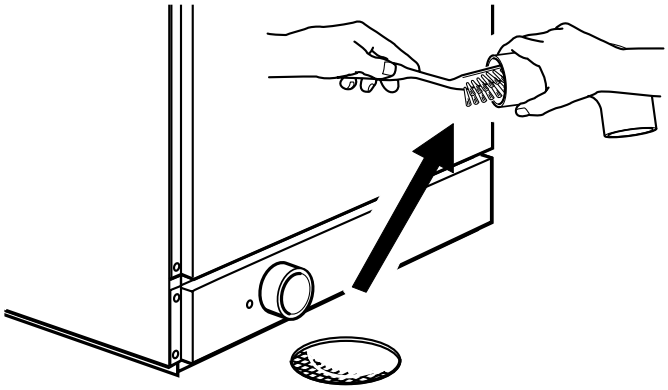

7.6 Water inlet

At regular basis, check the filter at the water inlet. Clean if necessary.

Demount the hose to the water inlet and pull out the filter (A).

When remounting, make sure the filter is in position and that the connections are tight.

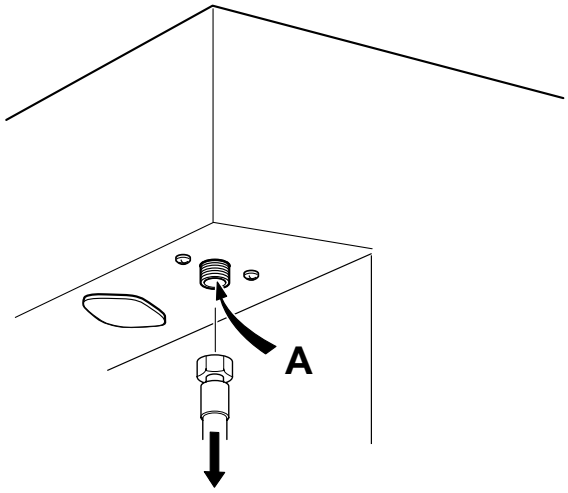

fig.7387

7.7 Maintenance to be carried out by qualified service personnel

Contact qualified service personnel to perform the following maintenance:

Once a year:

- Inspect the interior of the machine during an actual wash cycle to ensure that no leaks are noticed.

For original spareparts please contact your local authorized dealer.

8 Disposal information

8.1 Appliance recyclability and disposal

8.1.1 Recyclability

Our appliances are manufactured using a significant percentage of recyclable metals (such as stainless steel, iron, aluminium, galvanized sheet, copper, etc.), which can be recovered through the local recycling systems, in compliance with the regulations in force in the country of use.

National regulations regarding waste disposal may vary. Disposal of the appliance must therefore be carried out in accordance with the applicable legislation and the directives issued by the competent authorities in the country where the appliance is decommissioned.

The components of the appliance must be separated and disposed of in accordance with their material composition (e.g. metals, oils, greases, plastics, rubber, refrigerant gases, insulating boards and other insulating material, glass wool, LEDs, etc.) and in full compliance with applicable local and international waste management regulations.

Compressors may contain oils and refrigerants fluids - are special waste and has to be recycled on local bases regulations.

8.1.2 Procedure regarding appliance disposal and component / material recovery

This product should not simply be disposed of in the environment at the end of its life cycle; it is imperative instead either to dispose of it in accordance with local environmental regulations, or, preferably, to deliver it whole to an authorized recycling center.

All removed components, including doors and other structural parts, must be delivered together with the appliance to an authorized recycling or dismantling facility.

The dismantling/recycling center will apply state of the art technologies and methods available to them to effectively disassemble the products for best recyclability.

Note that printed circuit boards, electrical motors or other components identified in European Union legislation to be of high critical raw materials recovery potential need to be addressed specifically.

In case of doubts or questions, always refer to your reference customer care service.

Before disposing of the appliance, carefully inspect its physical condition and preservation state, checking for potential leaks of liquids or gases, as well as for broken parts that may pose hazards during handling and subsequent dismantling.

	The symbol on the product indicates that this product should not be treated as domestic waste, but must be correctly disposed of in order to prevent any negative consequences for the environment and human health. For further information on the recycling of this product, contact the local dealer or agent, the customer care service or the local body responsible for waste disposal.

Note!
When dismantling the appliance, any marking, this manual and other documents concerning the appliance must be destroyed.

8.2 Disposal of packing

The packing must be disposed of in compliance with the current regulations in the country where the appliance is used. All the packing materials are environmentally friendly.

They can be safely kept, recycled or burned in an appropriate waste incineration plant. Recyclable plastic parts are marked as following examples.

PE	Polyethylene: • Outer wrapping • Instructions bag
PP	Polypropylene: • Straps
PS	Polystyrene foam: • Corner protectors

Electrolux Professional AB
341 80 Ljungby, Sweden
www.electroluxprofessional.com