User manual

Washer extractor

WH6–7CV, WH6–8CV, WH6–11CV, WH6–14CV, WH6–20CV, WH6–27CV, WH6–33CV

Type W3....



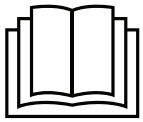

Electrolux PROFESSIONAL

438917840/GB, IE
2026.10.29

Original instructions

Contents

1 Safety Precautions 5
1.1 General safety information 6
1.2 Commercial use only 6
1.3 Copyright 6
1.4 Ergonomics certification 6
1.5 Symbols 7
2 Warranty terms and exclusions 8
3 General 9
4 Handling 10
4.1 Load 10
4.2 Detergent 11
4.2.1 Recommended detergent dosing instruction 13
4.3 To start a wash program 14
4.4 When program has ended 16
5 Menus and functions 17
5.1 Main menu 17
5.1.1 Edit programs 18
5.1.2 Statistics 23
5.1.3 Pumps 24
5.1.4 Settings 25
5.1.5 Service 28
5.1.6 Transfer 29
6 Maintenance 30
6.1 General 30
6.2 Time for maintenance 30
6.3 Every day 30
6.4 Detergent container 30
6.4.1 Deliming 33
6.5 Drain 33
6.6 Water inlet 34
6.7 Cleaning the mop elements 34
6.8 Maintenance to be carried out by qualified service personnel 34
7 Disposal information 35
7.1 Appliance recyclability and disposal 35
7.1.1 Recyclability 35
7.1.2 Procedure regarding appliance disposal and component / material recovery 35
7.2 Disposal of packing 35

The manufacturer reserves the right to make changes to design and component specifications.

1 Safety Precautions

- Servicing shall be carried out only by authorized personnel.
- Only authorized spare parts, accessories and consumables shall be used.
- Only use detergent intended for water-wash of textiles. Never use dry cleaning agents.
- The machine shall be connected with new water hoses. Re-used water hoses must not be used.
- The machine's door lock must under no circumstances be bypassed.
- If the machine develops a fault, this must be reported to the person in charge as soon as possible. This is important both for your safety and that of others.
- DO NOT MODIFY THIS APPLIANCE.
- When performing service or replacing parts, the power must be disconnected.
- When the power is disconnected, the operator must see that the machine is disconnected (that the plug is removed and remains removed) from any point to which he has access. If this is not possible, due to the construction or installation of the machine, a disconnection with a locking system in the isolated position shall be provided.
- In accordance with the wiring rules: mount a multi-pole switch prior to the machine to facilitate installation and service operations.
- If different rated voltages or different rated frequencies (separated by a /) are stated at the machine data plate, instructions for adjusting the appliance for operation at the required rated voltage or rated frequency are stated in the installation manual.
- Stationary appliances not fitted with means for disconnection from the supply mains having a contact separation in all poles that provide full disconnection under overvoltage category III, means for disconnection must be incorporated in the fixed wiring in accordance with the wiring rules.
- The openings in the base, shall not be obstructed by a carpet.
- Maximum mass of dry cloth: WH6–7CV: 7.5 kg, WH6–8CV: 8.5 kg, WH6–11CV: 11.5 kg, WH6–14CV: 14.5 kg, WH6–20CV: 21 kg, WH6–27CV: 27.5 kg, WH6–33CV: 36.5 kg.
- A-weighted emission sound pressure level at working stations:
  - Wash: WH6–7CV: <70 dB(A), WH6–8CV: <70 dB(A), WH6–11CV: <70 dB(A), WH6–14CV: <70 dB(A), WH6–20CV: <70 dB(A), WH6–27CV: <70 dB(A), WH6–33CV: <70 dB(A).
  - Extraction: WH6–7CV: <70 dB(A), WH6–8CV: <70 dB(A), WH6–11CV: <70 dB(A), WH6–14CV: <70 dB(A), WH6–20CV: <70 dB(A), WH6–27CV: <70 dB(A), WH6–33CV: <70 dB(A).
- Maximum inlet water pressure: 1000 kPa
- Minimum inlet water pressure: 50 kPa
- Additional requirements for the following countries; AT, BE, BG, HR, CY, CZ, DK, EE, FI, FR, DE, GR, HU, IS, IE, IT, LV, LT, LU, MT, NL, NO, PL, PT, RO, SK, SI, ES, SE, CH, TR, UK:
  - The appliance can be used in an area open to the public.
    If installation is made in a public area, it is only allowed to select the below segmets:
    APARTMENT AUTO DOSING
    APARTMENT MANUAL DOSING
    APARTMENT BUILDING MATS

LAUNDROMAT/LAUNDERETTE

LAUNDROMAT/LAUNDERETTE WASCOMAT

LAUNDROMAT/LAUNDERETTE MENCH

CAMPING/MARINA

OTHER SELF SERVICE

  - This appliance can be used by children aged from 8 years and above and persons with reduced physical, sensory or mental capabilities or lack of experience and knowledge if they have been given supervision or instruction concerning use of the appliance in a safe way and understand the hazards involved. Children shall not play with the appliance. Cleaning and user maintenance shall not be made by children without supervision.
  - Children of less than 3 years should be kept away unless continuously supervised.
- Additional requirements for other countries:
  - This appliance is not intended for use by persons (including children) with reduced physical, sensory or mental capabilities, or lack of experience and knowledge, unless they have been given supervision or instruction concerning use of the appliance by a person responsible for their safety. Children should be supervised to ensure that they do not play with the appliance.
  - This appliance is not intended for use in household applications but is intended for use in similar applications such as: staff kitchen areas in shops, offices and other working environments, farm houses, by clients in hotels, motels and other residential type environments, bed and breakfast type environments, areas for communal use in blocks of flats or in launderettes.

1.1 General safety information

The machine is only intended for water-wash use.

Do not hose down the machine with water.

In order to prevent damage to the electronics (and other parts) that may occur as the result of condensation, the machine should be placed in room temperature for 24 hours before being used for the first time.

1.2 Commercial use only

The machine/machines covered by this manual is/are made for commercial and industrial use only.

1.3 Copyright

This manual is intended solely for consultation by the operator and can only be given to third parties with the permission of Electrolux Professional AB company.

1.4 Ergonomics certification

The human body is designed for movement and activity but physical stress injuries as a result of static and repetitive movements or unfavorable working postures may occur.

The ergonomic features of your product, the ones which may influence your physical and cognitive interaction with it, have been assessed and certified.

A product which exhibits ergonomic features, in fact, shall fulfil specific ergonomic requirements, belonging to three different areas: Polytechnic, Biomedical and Psychosocial (usability and satisfaction).

For each of these areas, specific tests with real users have been performed. The product was therefore compliant with the ergonomic acceptability criteria requested by the standards.

In case several machines are managed by the same operator the repetitive movements will increase and as a consequence of this the related biomechanical risk will increase exponentially.

Follow the below recommendations to avoid, as much as possible, operators acquiring bodily injury.

- The models WH6-14, WH6-20, WH6-27 and WH6-33 should be connected to automatic dosing of chemicals or equipped with detergent dosing dispenser on the front.
- For the models WH6-7, WH6-8 and WH6-11 the possible postural risks are the interaction with the door handle in case the machine is not placed on a base. Place the machine on a base instead of directly on the floor so that the operator does not need to bend his/her back unnecessarily when loading and unloading.

  Minimum suggested height of bases is 300 mm.
- The hand force needed to open and close the washing machine door can be perceived too high the first times the machine is used due to the initial high gasket pressure. Therefore, it is recommended not to use only the fingers but also the palm when closing and opening the door. The gasket pressure will be lower after some days of use.
- Make sure there are suitable trolleys or baskets for loading, unloading and transportation.
- Organize job rotation in the working place in the case several machines are managed by the same operator.

1.5 Symbols

	Caution
	Caution, high voltage
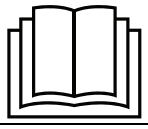	Read the instructions before using the machine

2 Warranty terms and exclusions

If the purchase of this product includes warranty coverage, warranty is provided in line with local regulations and subject to the product being installed and used for the purposes as designed, and as described within the appropriate equipment documentation.

Warranty will be applicable where the customer has used only genuine spare parts and has performed maintenance in accordance with Electrolux Professional AB user and maintenance documentation made available in paper or electronic format.

Electrolux Professional AB strongly recommends using Electrolux Professional AB approved cleaning, rinse and descaling agents to obtain optimal results and maintain product efficiency over time.

The Electrolux Professional AB warranty does not cover:

- service trips cost to deliver and pick up the product;
- installation;
- training on how to use/operate;
- replacement (and/or supply) of wear and tear parts unless resulting from defects in materials or workmanship reported within one (1) week from the failure;
- correction of external wiring;
- correction of unauthorized repairs as well as any damages, failures and inefficiencies caused by and/or resulting from;
  - insufficient and/or abnormal capacity of the electrical systems (current/voltage/frequency, including spikes and/or outages);
  - inadequate or interrupted water supply, steam, air, gas (including impurities and/or other that does not comply with the technical requirements for each appliance);
  - plumbing parts, components or consumable cleaning products that are not approved by the manufacturer;
  - customer’s negligence, misuse, abuse and/or non-compliance with the use and care instructions detailed within the appropriate equipment documentation;
  - improper or poor: installation, repair, maintenance (including tampering, modifications and repairs carried out by third parties not authorized third parties) and modification of safety systems;
  - Use of non-original components (e.g.: consumables, wear and tear, or spare parts);
  - environment conditions provoking thermal (e.g. overheating/freezing) or chemical (e.g. corrosion/oxidation) stress;
  - foreign objects placed in- or connected to- the product;
  - accidents or force majeure;
  - transportation and handling, including scratches, dents, chips, and/or other damage to the finish of the product, unless such damage results from defects in materials or workmanship and is reported within one (1) week of delivery unless otherwise agreed;
- product with original serial numbers that have been removed, altered or cannot be readily determined;
- replacement of light bulbs, filters or any consumable parts;
- any accessories and software not approved or specified by Electrolux Professional AB.

Warranty does not include scheduled maintenance activities (including the parts required for it) or the supply of cleaning agents unless specifically covered within any local agreement, subject to local terms and conditions.

Check on Electrolux Professional AB website the list of authorized customer care.

3 General

There are a large number of wash programs for different business segments available in the machine but only the wash programs suitable for the business segment selected are visible on the program selection screen.

It is possible to create new wash programs directly on the user interface.

A wash program created in one model/size of machine can be transferred to another model/size without changing any parameters.

The wash programs controls the whole wash process including chemical dosing.

Dosing pumps are fully managed and controlled from the machine, including calibration and low level alarms.

All machines have automatic saving of water, chemicals and energy. The water levels and the chemical dosing are adapted to the weight of the load.

Optional there is an integrated weighing system that can prevent over- and under-loading.

Gestures

	**Tap** Touch one finger lightly on the screen.
	**Swipe** Move one finger across the screen quickly.
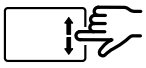	**Scroll** Move one finger across the screen without lifting. Drag a list up or down to see more. Swipe to scroll quickly.

4 Handling

4.1 Load

Note!
Remove all objects from pockets and make sure there are no metal objects such as screws, pins etc. left. Metal objects might cause damage to the drum.

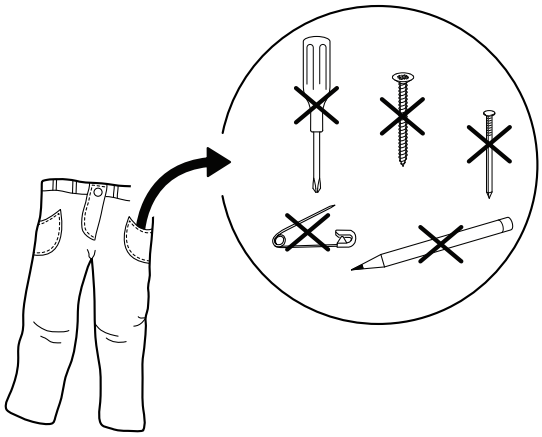

fig.X04827B

Load the goods into the machine according to recommendations and close the door.

Recommended maximum load	
WH6–7CV	7 kg
WH6–8CV	8 kg
WH6–11CV	11 kg
WH6–14CV	14 kg
WH6–20CV	20 kg
WH6–27CV	27 kg
WH6–33CV	33 kg

4.2 Detergent

Depending on machine type the detergent container is located on top of the machine or on the front of the machine.

Detergent container on top of the machine

Add the correct amount of detergent, bleach and softener according to recommendations.
(Not valid if automatic dosing is used).

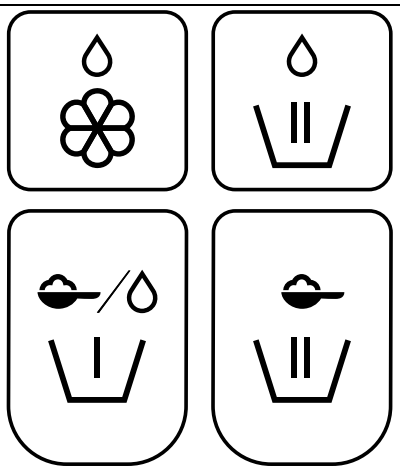

fig.X00963

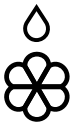	Softener, liquid.		
	Main wash, liquid chemicals. Alt. for mop machines, liquid mop chemicals in last rinse.		
	Pre-wash, powder or liquid detergent.		**Note!** **When using liquid detergent in the pre-wash compartment, start the washer extractor immediately after filling. Otherwise, the liquid detergent may flow through the drum before the program starts.**
	Main wash, powder detergent.		

Detergent container on the front of the machine, optional for WH6–14CV, WH6–20CV, WH6–27CV, WH6–33CV

Push to open the detergent container.

Add the correct amount of detergent, bleach and softener according to recommendations.

(Not valid if automatic dosing is used).

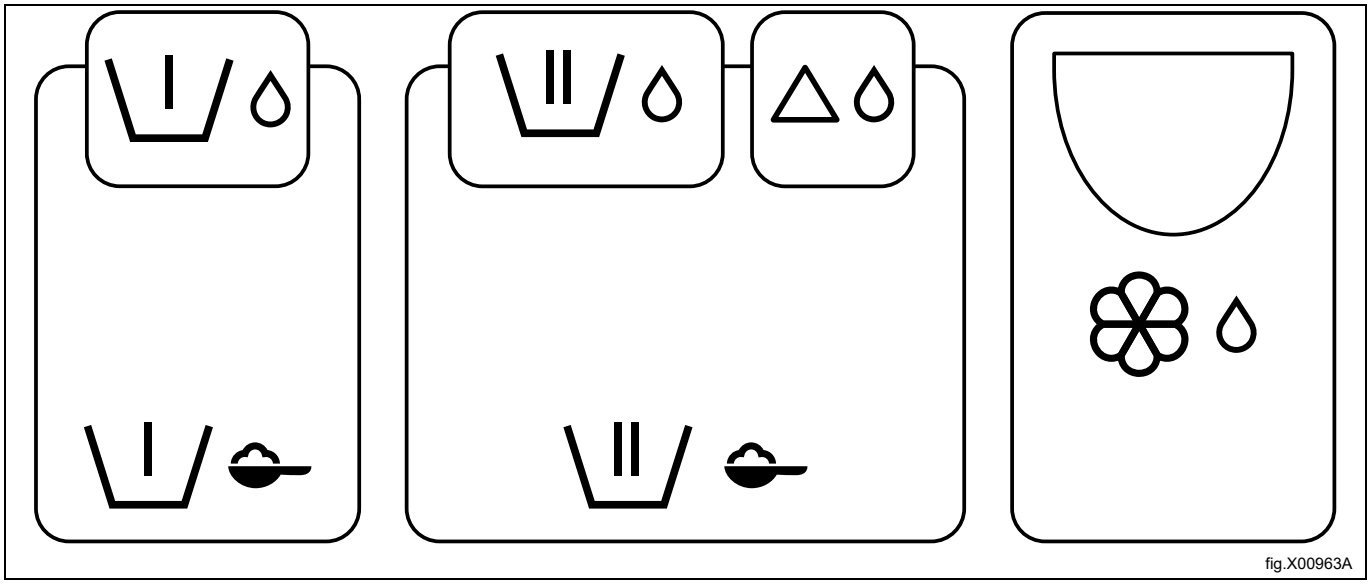

fig.X00963A

	Pre-wash, liquid detergent.
	Pre-wash, powder detergent and bleach powder.
	Main wash, liquid detergent.
	Main wash, powder detergent and bleach powder.
	Main wash, liquid bleach. Alt. for mop machines, liquid mop chemicals in last rinse.
	Softener, liquid.

4.2.1 Recommended detergent dosing instruction

To prevent excessive foaming and detergent residues, always follow the detergent dosage recommended by the detergent supplier.

- Check the dosage instructions printed on the detergent container.
- Measure the detergent using a graduated measuring cup or dosing device before adding it to the detergent box.
- Do not estimate the quantity by eye.
- Do not exceed the recommended dosage, as overdosing may cause excessive foam, poor rinsing performance and detergent residues on the machine.

Note!

Make sure no detergent spills out on the floor causing risk of slipping and falling.

Note!

If bleach is used, be careful when handling liquid bleach. Take care when opening the detergent container and when filling the compartment with liquid bleach. Avoid splashing due to the risk of getting liquid bleach in your eyes.

4.3 To start a wash program

Tap to select a program from the list.

Depending on machine set up the programs are displayed as a list or as a grid.

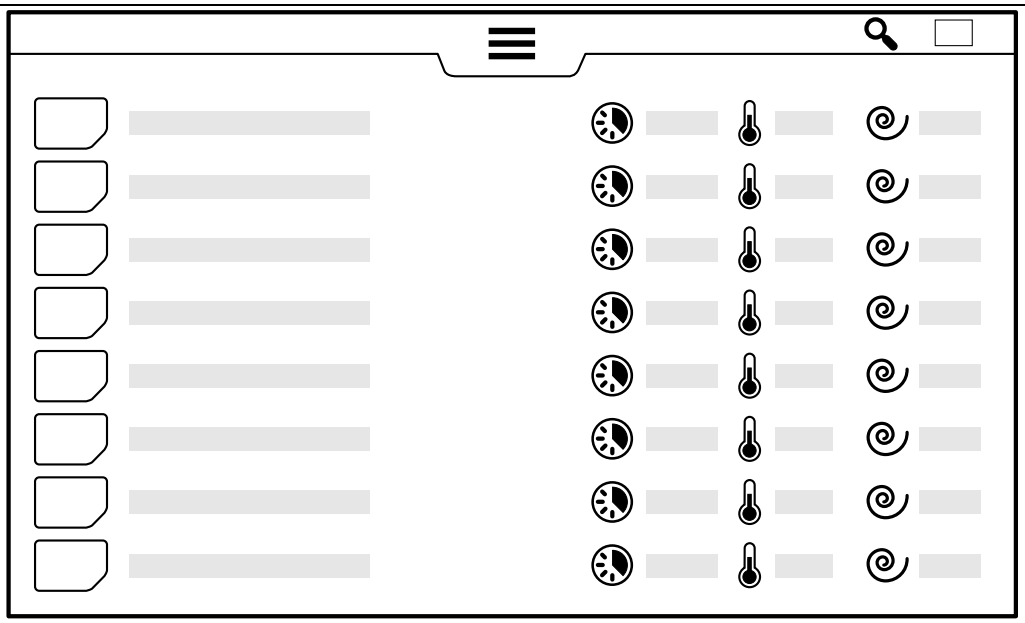

fig.X01573A

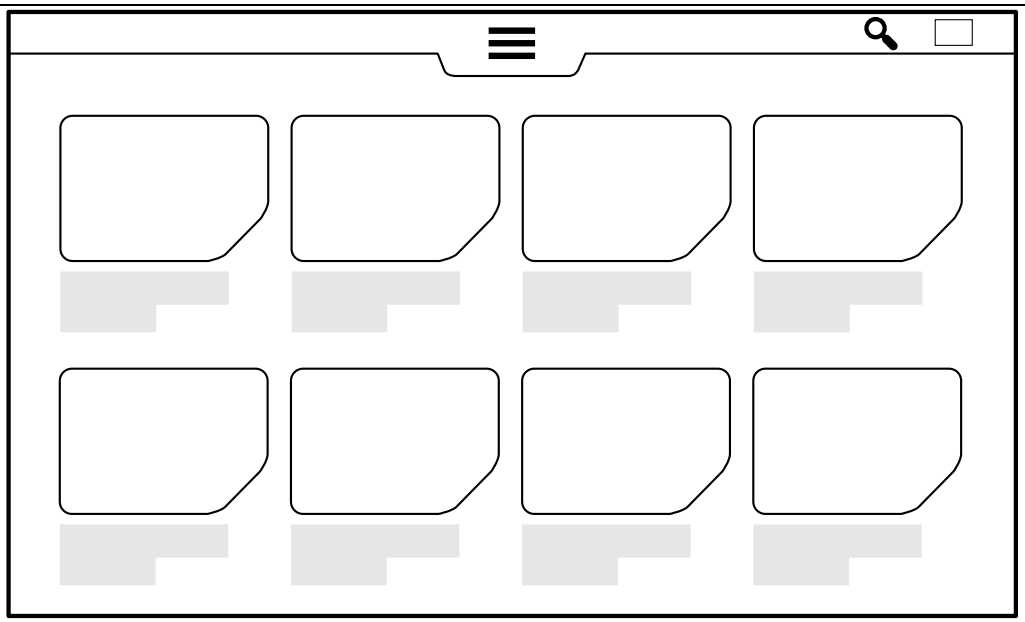

fig.X01573

In list view you can get a quick view of the main parameters in the wash program: the calculated program duration, the highest programmed temperature and the final extraction speed in G.

The program duration is calculated based on full load in the machine and that the water pressure is not lower than what is specified in the Installation manual. Also, the inlet water temperature affects the calculated program time on heated machines. The inlet water temperature value that is used in the formula can be changed in the settings menu.

When a program is selected, a start screen is shown. The appearance of this screen depends on the choices made in the installation wizard and in the settings menu.

Activate the information menu for more details about selected program.
Information about the different program parameters are shown on the screen.

	Information
	The actual temperature
	The highest programmed temperature
	If there is a Cool down module in the program or not
	Thermal disinfection (maintain temperature)
	Remaining time in the current program module
	Duration of the program
	Indication of the water levels used in the program Lowest level = 0 Highest level = 6
	Indication of the drum action (rotation time/no rotation time) used in the program No rotation = 0 Normal rotation = 1 Mildest rotation = 5
	Indication of final extraction speed Highest speed = 10
	Dosing pumps used in the program
	The calculated time when the wash cycle will be ready if it is started at the actual time. It is possible to set a delayed start. Tap on the date/time field and set the desired finish time. Confirm with the start button. The start button will twinkle until the program starts. If the door is opened before the program starts by the delayed start function the delayed start will be cancelled. In case you want to start the program before the delayed start function starts it you can tap on start again.

Before start it is possible to add information about the wash load to be run. The menu items are selected in the Settings menu. Follow the on screen instructions for each menu item. This information will be shown at the end of the wash cycle and will also be stored in Statistics and be included in reports.

	Operator ID input
	Batch number input
	Customer name input
	Delivery day input

Tap on the start button to start the program.

During program run it is possible to pause, stop and rapid advance if allowed according to the settings.

Coin operated machines

Insert correct amount of coins to start the machine. Depending on the settings, you may also need to tap the start button to start the program.

4.4 When program has ended

When a wash program has ended or been stopped it is possible to get a report on the screen.

	Click on the report icon before opening the door to show a detailed report for the last program on the screen. If this icon appears or not depends on which segment is selected. This function can be deactivated in the settings menu.

Leave the door open when ready. This is to prevent that moisture stays in the machine and develop bacteria and mould.

5 Menus and functions

5.1 Main menu

Push the menu button 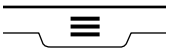 to enter the main menu.

The menu button will not be visible if any of the self service segments is selected. To enter main menu in self service, push and hold at the menu button position for 10 seconds.

Enter a password to access the Main menu.

There are different passwords for different levels of access.

Default passwords set from factory are:

- 0000: Manager: Chemical dosing (Used to edit pump settings)
- 1111: Manager: (Used to edit programs, change settings etc.)

Passwords can be changed in Settings.

When activating the Main menu the following menus are shown on the screen:

	Programs Shows the programs available. See section “To start a wash program”.
	Edit programs This menu is used to duplicate and edit wash programs.
	About This menu shows info about the machine and the software.
	Statistics This menu shows statistics of the machine.
	Pumps This menu is used for managing the dosing pumps.
	Settings This menu is used for different settings of the machine.
	Service This menu is used for trouble shooting.
	Transfer This menu is used for transferring wash programs, images, reports and settings between machine and USB memory.

Different sub menus are visible depending on machine set up.

Always follow the instructions on the screen.

5.1.1 Edit programs

In this menu it is possible to change settings for any program other than the factory-made ones.

	Change program picture
	Rename program
	Duplicate program
	Copy module/parameter
	Paste module/parameter

To duplicate and edit a program

Activate the program you wish to duplicate with a long press. An extra menu with options will appear on the screen.

Press the duplicate symbol to duplicate the program.

The copy will be added after the original program in the program selection list with the same name and “*” at the end of the program name. It is now possible to edit, rename and change icon in the copy.

To copy a program module

Open the program you wish to copy a program module from. In the program module list; press and hold to activate the extra menu and press the copy symbol to copy the program module. Exit when ready.

Open the program where the copy of the program parameter shall be pasted. In the program module list; press and hold to activate the extra menu and press the paste symbol to paste the program module. The program module will be pasted before the module you hold on.

To rename a program

Activate the program you wish to rename with a long press. An extra menu with options will appear on the screen.

Press the symbol with letters. It is now possible to enter a new name for the program.

Press the enter symbol to save the new name.

To change the icon for a program

Activate the program you wish to change with a long press. An extra menu with options will appear on the screen.

Press the picture symbol. Select an image from the list shown on the screen. It is possible to upload own pictures in the transfer menu.

Note!

It is not possible to rename or change program picture on factory made programs.

Example:
You want to add 2 minutes to the main wash in a factory-made wash program

1. In the Edit menu: Duplicate the program you want to change.
2. In the Settings menu under Programs/Arrange: Drag the factory-made program you have made a duplicate of to the left column with inactive programs.
3. In the Edit menu: Tap and hold on the new program and remove the * at the end of the program name.
4. Tap on the "Main wash" module and then on the "Time" to change the wash time to be 2 minutes longer.

Header module: General

The parameters that are valid for the whole wash program are set in the header module.

- Start pumps at
  - Set the temperature at which dosing pumps should start in case “start at temperature” is selected in the wash module.
- Heavy soil option
  - If set to “ON”, a heavy soil button will be shown on the start screen. If the user selects this option the washing time will increase.
- Extra rinse option
  - If set to “ON”, a extra rinse button will be shown on the start screen. If the user selects this option one rinse will be added. The added rinse is a copy of the second last rinse or, in case the program has only one rinse, a copy of the last rinse but without chemical dosing.
- Residual moisture and Dry load reduction
  - These parameters should be set in wash programs for loads that are wet when loaded, for example floor cleaning mops. Enter the known residual moisture* that will be weighed in the weighing module in the wash program. Select Dryload reduction to get the correct amount of water and chemicals related to the calculated weight of the dry load instead of the measured load.

    Tip: Wash programs for floor cleaning mops should start with pre rinse(s) followed by an extraction before the weighing module.

    **** How to calculate the residual moisture value: Run the program with dry, clean mops with known weight and abort the program after the extraction. Measure the weight of the damp mops and calculate the residual moisture RMC=((weight of the damp – weight of the dry) / weight of the dry) x 100.***
- Use calculated weight*
  - Select if the dosing of chemicals and the water levels should be related to the calculated weight of dry load instead of the measured load. (Mainly used for cleaning mops).
- Water reduction
  - Select if water levels should be adjusted to the weight of the load.
- Maximum and minimum laundry weight (only on machines with built in scale)
  - Enter the maximum and minimum laundry weight in % of the machines capacity. It will not be possible to start the wash program if the load is outside these boundaries when overload/underload protection is activated in the settings menu.
- Safe disinfection
  - Set this parameter in thermal disinfection programs if you want “ Safe disinfection” receipts in the downloaded reports. Note that you need to select “Maintain temperature” in a wash module as well.
- Buzzer at program end
  - If set to “ON”, there will be a sound when the wash program has ended.

Weighing

A weighing module is necessary to get water, energy and chemical savings. The weighing module can be placed either at the beginning of the program or after a pre-rinse followed by extraction.

The weighing module has no parameters.

The weighing of the load is either done by a weighing sequence where the drum is spinning or by the option “Integrated savings” (a built-in scale).

Dosing of chemicals

There are 16 chemical types in the list. In case none of them suits the process you can select another chemical type. Tap on the chemical type and you will see a drop-down list with additional chemical types.

Branded chemical names will be shown if they have been added to the chemical type in the “Pump menu”.

Note!

It is not possible to use the same chemical several times in a wash module. In case you want to use the same chemical more than once in a wash module you have to created two wash modules without a drain in between.

Parameters in main wash, pre-wash, rinse, pre-rinse and soaking modules:



Temperature settings

- Filling with pre-heating
  - Set if the water shall be heated to max; “Filling max. temperature”, during the filling phase. Can be used to shorten the total program time.
- Filling max. temperature
  - Set the max water temperature during the filling phase. The temperature will be adjusted by opening and closing the hot/cold water valves and/or turning on/off heating.
- Wash temperature
  - Set the wash temperature between 10–95°C.
- Maintain temperature
  - Set if the set wash temperature shall be maintained during the whole washing time. This is mainly used for thermal disinfection.

Tip: In a main wash, following a pre-wash, the “Filling max. temperature” can normally be set as high as the “Wash temperature”.



Time settings

The times are set in hours/minutes/seconds.

- Filling
  - Set the absorbing/wetting/soaking time. Time starts to count down when set level is reached. During this phase the textile will absorb water and the water valves will open to refill up to the set level.
- Washing
  - Set the washing time. Time starts to count down when set level and temperature conditions are fulfilled.
- Start washing timer at
  - Select from a drop down list if the washing time should start counting down when the set level is reached or when the set wash temperature is reached.

Tip: In a main wash, following a pre-wash, the time in the filling phase can normally be shortened since the textile already has absorbed water in the pre-wash.



Water level settings

- Level
  - Select water level from the drop down list. The relationship between drum diameter and level in mm is not linear. Therefore, there is a list of proven levels that are adapted to give the same results regardless of drum size.
  - The third water type can be used either as cold or hot water.
    This function is used only when an inlet valve for a third water type is installed to for example soft or re-used water. (An inlet valve for a third water type is available as a kit).
    It is also possible to choose to take in specially treated water or water from a tank instead of cold or hot water.
- Smart filling
  - Select smart filling to get the most accurate water level.

Note!
If smart filling is selected the drum rotation will be stopped at the end of the filling.

For water level settings, please refer to section “Water level”.



Action and speed settings

Select drum rotation action during the different steps from the drop down list with predefined and tested rotation and standing still times.

Select drum speed during the different steps. The value is set between 0–1.00G.

For action and speed settings, please refer to section “Drum Action”.

If "Smart filling" is selected, the drum rotates in one direction with low speed up to a level close to the programmed level; then, the drum rotation stops until the programmed level is reached. If "Drum action" is set to "none," there will be no drum rotation during filling.

If "Smart filling" is deselected, the drum action will be the one that is selected from the drop-down list, also during filling.



Dosing of chemicals

For each of the chemicals the following can be set:

- At temperature
  - Set if the dosing of the selected chemical should start before or after the dosing temperature that is set in header module is reached.
- Load
  - Set the amount of chemical(s) that shall be dosed in the step/module. The amount is set in ml/kg of load. The same dosage amount per kg load gives different dosing times depending on how much load there is in the machine.
    The amount of chemicals will however never be less than the amount related to the % of the machine's capacity set in the parameter “Min. chemical dosing”.
    Example: Min. chemical dosing: 30%, weight of the load is 20% of machine capacity. Dosing will be according to 30% of machine capacity.
    If the program does not have a weighing module the dosing will be according to the machines capacity.

Flushing in detergent box compartments

Select which compartment(s) in the detergent box that shall be flushed in the module. The front mounted box has 6 compartments but 1a and 1b are flushed in parallel and this also applies to 2a and 2b. The top mounted box has 4 compartments.

In factory made programs the compartments are used like below:

- 1, 1b, 1a = Pre-wash
- 2, 2b, 2a = Main wash
- 3 = Last rinse
- 4 = Main wash (pre-wash/first rinse/last rinse)

Top mounted detergent compartment



Front mounted detergent compartment (optional)

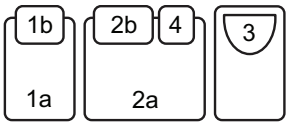

Tip: If liquid bleach chemicals that become aggressive in high temperatures are used in a program with high wash temperature it is recommended to flush compartment 4 in a program step with lower wash temperature for instance the first rinse.

Cool down module

A controlled cool down is necessary to avoid permanent wrinkles when washing synthetic materials in a temperature above their glass-transition temperatures (Tg).

Cool down can also be used to avoid too hot water to be drained.

End temperature: Set the desired temperature that the water should reach.

Max temperature decrease: Set how fast the temperature decrease is allowed to be.

Action and speed during cool down.

Drain module

Action and speed during drain.

If drain valves for re-use are connected, you can select if the water should be drained to the sewer or one of the connected tanks.

Extraction module

- Speed
  - Select extraction speed from the drop down list with predefined and tested G-forces.
    The same rotation speed in different sizes of drum diameters gives different dewatering. Therefore, the speed is specified in G instead of revolutions per minute (rpm).
- Time
  - Set the total extraction time.

For extraction settings, please refer to section “Extraction Speed”.

Water level (default settings from factory)

Water level in mm	WH6–7CV	WH6–8CV	WH6–11CV	WH6–14CV	WH6–20CV	WH6–27CV	WH6–33CV
0.Low	65	65	90	97	109	135	153
1.Low Medium	68	68	93	100	110	137	155
2.Medium	101	101	130	157	199	199	214
3.Medium High	102	102	140	158	200	200	215
4.High	124	124	160	173	214	239	249
5.Extra High	125	125	170	174	215	240	250
6. Very High	187	187	195	203	234	275	280

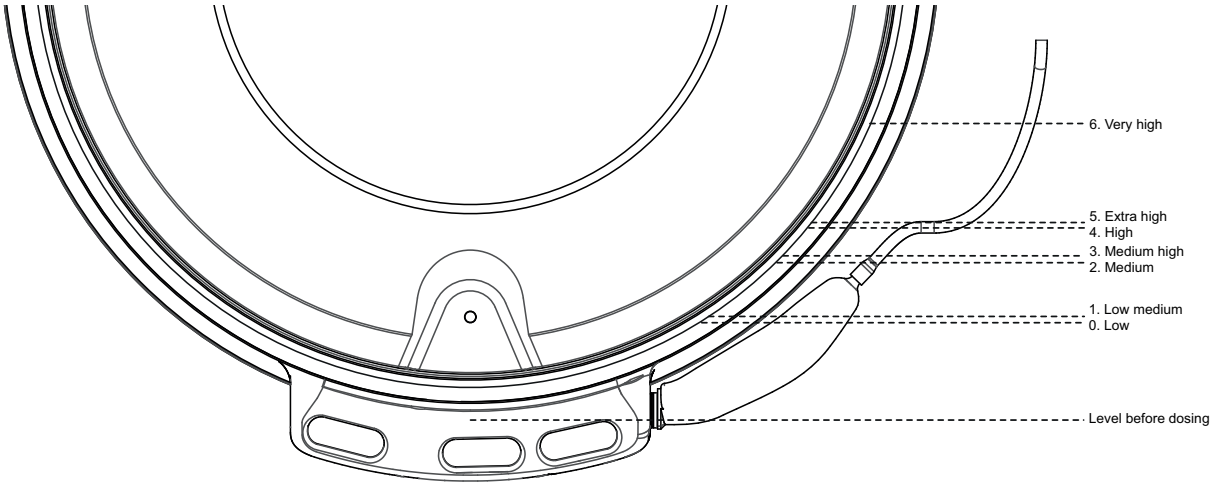

fig.X01712A

Drum action

Drop down list	Action	Rotation in sec.	No rotation in sec.
None	None	0	0
Normal	15s rotation/4s still. Fast acceleration.	15	4
Mild	8s rotation/7s still. Slow acceleration.	8	7
Delicate	6s rotation/18s still. Very slow acc.	6	18
Delicate Wool	6s rotation/ 50s still. Slow acc.	6	50
Delicate Care	6s rotation/ 30s still. Slow acc.	6	30

Extraction speed

Drop down list	WH6–7	WH6–8	WH6–11	WH6–14	WH6–20	WH6–27	WH6–33
Min (45)	393	393	367	352	333	318	318
90	556	556	520	497	471	450	450
175	775	775	725	693	657	627	627
230	889	889	831	795	753	719	719
265	954	954	892	853	808	772	772
300	1015	1015	949	908	860	821	821
350	1096	1096	1025	981	928	887	887
400	1172	1172	1096	1048	993	948	948
420	1201	1201	1123	1074	1017	971	971
450	1243	1243	1162	1112	1053	1005	1005
G	RPM						

5.1.2 Statistics

This function is used to check the statistics of the machine. For example total program run hours, used chemicals, power fails etc.

5.1.3 Pumps

In this menu you can manage dosing systems/pumps such as Dosave, Jetsave or other pumps connected to the machine.

	**Pumps** Select pump type connected • Select “Peristaltic” for Dosave (or any other dosing system or pumps connected to the digital (relay) outputs). • Select “Venturi” for Jetsave. – Set desired flush time. – Set the desired clean flush time. • Select “Manifold” for Dosave (or any other dosing system or pumps connected to the digital (relay) outputs) in combination with flush manifold. – Set desired flush time. ***Tip: Needed flush time can be calculated if you know the tube length, diameter and the flow rate.*** Example: • Flow rate: 2.2 l/min • Tube diameter: 10 mm • Tube length: 4.5 m • Calculated needed flush time: 10 seconds **Note!** **Check that the flush time is long enough by disconnecting the tube from the machine and make sure that water comes at the end of the flush time. If chemicals still come at the end of the flush time the flush time must be increased.**
	**Chemicals** In this menu you can change the allocation of chemicals to pumps. Tap on the chemical type (detergent/softener/bleach and so on). A drop-down list with chemical types will appear. Select the chemical type you want to connect to the pump. It is also possible to add branded name and a picture to each chemical type. The name and picture will then be visible under chemicals in the “Edit program” menu and on the start program screen if selected in the settings menu. **Note!** **In the “Transfer menu”, you can upload branded chemical images.**
	**Cost** In this menu you can set the price of the chemicals for cost calculations and reports.
	**Priming** You must make sure that the tubes are filled with chemicals before the calibration is done. Follow the instructions on the screen.
	**Calibration** Follow the instructions on the screen. It is also possible to type in the flow rate by a long press on the value.
	**Tube change** Here you can note the date when the tubes have been changed. **Note!** **This menu item is not active in all software versions.**

5.1.4 Settings

In this menu, different settings to the machine can be made. The table show some of the settings that can be changed/set.

	**Language** • Default language – Choose from the drop down list which language that shall be used as default language on the machine. • Timeout to default – Set the time, after which the machine returns to the set default language from any other language selected during operation.
	**Date** Used to change displaying of the date.
	**Time** Used to change displaying of the time.
	**Display / Sleep timeout** The display will either be dimmed to a lower brightness or a “Welcome screen” will be shown after the set time of inactivity. Select if the “Welcome screen” should be shown. **Note!** **In the “Transfer menu”, you can upload your own welcome screen.**
	**Programs** • Arrange – Make programs active or inactive by dragging and dropping them between the different columns Active and Inactive. It is only the programs listed in the column Active that will be shown in the program selection screen. • View mode – Select if the programs shall be displayed as a list or as a grid on the program selection screen. – Select if the following fields shall be visible or not on the screen at the start of a program. – Info – Operator ID – Batch ID – Customer ID – Delivery date • End-washing consumptions – Select if utility consumption data should be shown at the end of a wash cycle. • Program screen timeout – If the user has selected a program but not yet started the program, the user interface will go back to the program selection screen after the time set in this menu. • Max pause time – Select if the time a program can be paused should be limited and in that case, set the maximum pause time. • Region/Country and Business segment – Select the country and one or more business segments where the machine will be used. These selections will create an active program list with suitable factory-made programs. **Note!** **If any self-service segment is selected, some of the parameters that affect how the user interface looks will change.** • Pause, Stop and Skip / Rapid advance buttons – Select for each button, if it should be visible during the whole program (always on), only during the regret time or if it should not be visible at all during the program (always off). • Regret time – This time is counted down from the start of a program. Before this time is up it is possible to go back to the program selection screen without loosing paid money (valid for coin-operated machines).

	• Programs Select if buttons for selection of chemicals shall be visible or not on the start screen. There can be a maximum of three buttons for chemical selection. One for detergent, one for bleach and one for softener. For each button it is possible to select the following: – Off – Show all – Show all + None Off means that there will not be a button for the selection of that chemical type on the start screen. Show all means that there will be a button for that chemical type on the start screen. If show all is selected for detergent, bleach or softener a list with all chemicals of that type that are used in the wash program will be shown when the user touches the corresponding button on the start screen. Show all + None means that it will be possible to select No detergent, No bleach or No softener as well. • Stop button visible on screen saver – Select if the stop button should be visible on the screen saver or not. • IWS overload protection – Select if the overload protection should be active or not. • IWS underload protection – Select if the underload protection should be active or not. • Show weight value – Activate this function to display the weight during start, stop and program run. • Timeout for buzzer – Set for how long the buzzer should be activated in pause and at program end. • Show time – Select if the estimated program duration and the remaining time shall be shown. The calculated program duration is shown before the program is started, the remaining time is counting down and is adjusted during program execution. • Repeated start – This function is only used for test purposes.
	**Inlet water** Estimated temperature: This value is used in the calculations of program duration in heated machines. In case the inlet temperature is much lower or higher an adjustment of this value will give a more precise calculated program duration time. Drum filling flow rate: This value is used in the calculations of program duration. In case the water pressure is low an adjustment of this value might be needed to get a more precise calculated water filling time. Fast filling temp limit: If the filling phase temperature is lower than this and higher than 0°C/32°F both cold and hot water valves will open simultaneously. Advanced level settings: Click on the pre-set value and use the digits to set a new value. NOTE: The new values will not be cloned when transfer the settings.
	**Customers** Here it is possible to make a personal list of customers.
	**Price programming** In this menu all parameters related to price programming are set. • Coin value (the value for one coin pulse). • Prices for each program. • Prices for options. • Free program start (makes it possible to start programs without paying. • One time program start (this program can be used once without paying).
	**Power balance** The machine has a sophisticated system that ensures the highest possible dewatering even if the load in the drum is uneven and unbalanced. The system is continuously, during the whole extraction time, adjusting the drum rotation speed to avoid unbalance and vibration but still maintain the high G-force and dewatering. The same system can be used to decrease the already low vibration when needed.
	**Cost calculation** Select the supply voltage in your location (this is needed to get the correct energy calculation). Enter the energy and water prices in your location to get the correct cost calculation. If needed, in case the water pressure is lower than what is stated in the installation manual, adjust the valve's flow rates, to get a more accurate calculation of water consumption.
	**Detergent box** It might be needed to adjust the flush times due to local conditions (water pressure, type of detergent used etc). The flush sequence in a compartment with siphon needs to have a flush time long enough to start the emptying and after that a pause long enough for completely emptying the compartment. It is recommended to repeat the flush to make sure that no residual chemicals will remain in the compartment.
	**Weight calibration** If the displayed weight deviates from the actual one, a zero calibration may be required. Follow the instructions on the screen.

	**Happy hour** Here you can set discounts (in % or fixed amount) for weekdays and times of days.
	**Error detection** It is possible to change the conditions and set new values for the following error codes: • 11:1 Water filling • 11:3 Drain • 11:5 Heating For 11:1 Water filling, the parameter that can be changed is: • Maximum filling time (Default = 600 seconds, Adjustable range = 300-3600 seconds) For 11:3 Drain, the parameter that can be changed is: • Maximum drain time (Default = 180 seconds, Adjustable range = 60-600 seconds) For 11:5 Heating, the following 2 parameters that can be changed are: • Minimum water temperature increase (Default = 3.3 °C / 5.9 °F) • Maximum heating time (Default = 600 seconds) The reason for doing this can for example be if an error code is showing up in cases where it is “normal conditions” and the parameter should be higher or lower to match the conditions.
	**Re-use** In the Re-use menu you can activate Drain and Drain blocking. (A drain valve unit must be installed to the machine and it can be ordered as a kit). When any drain output A, B, C, or D is activated, the output Drain valve and Drain block valve are also affected. Select if the Drain valve should be activated or deactivated when Drain A, B, C, or D is activated. Select if the Drain block valve should be activated or deactivated when Drain A, B, C, or D is activated.
	**Heating type** Select if the menu “Heating relay on” shall be active or inactive — Select whether the heating output should be activated when the actual water temperature is lower than the set temperature. (Turn off to switch to No heated).

Payment and booking systems

There are different ways to communicate with payment and booking systems.

Some payment/booking systems use serial communication protocols, other systems use digital outputs/inputs.

For systems that use digital signals, the following applies:

- A payment system (coin selector or card reader) that is mounted inside the washer extractor should be connected to the internal coin input as described in the instruction that follows with the payment system.
- An external payment system should be connected to the I/O unit placed in the rear electrical cabinet (see the installation manual). The external system can either be connected to the coin input or to the enable start input.

In case a payment system is connected to a coin input, set the value for each coin pulse and the price to start for each program in the sub-menu “Price programming”.

If a payment or booking system is connected to the external enable start input no coin value or prices should be set.

Select if the “External enable start” (Block start function) is used for Booking or Payment.

It is possible to set additional prices on chemicals in the Pump menu.

5.1.5 Service

This menu is mainly used for trouble shooting and functional tests.

- It is possible to turn on/off outputs and also to check the status of inputs.
- The drum motor can be ordered to run at a desired speed and direction.
- Some tests can only be performed if certain conditions are met.
  - To be able to turn on heat, there must be enough water in the drum to cover the heating elements.
  - To be able to run the motor, the door must be locked.
  - Other outputs, like for example water valves, can be turned on if the door is not locked but the loads will not get any power if the door is not locked. Use the electrical schematic for more information.
- There are two error logs/counters:
  - Error logs: The 20 last occurred errors are shown.
  - Error counters: Shows how many times each error has occurred.
- Reset paid coins
  This command will clear the paid unused coins shown in the upper left corner of the display.

5.1.6 Transfer

This menu is used to transfer/copy programs and settings to/from the machine by using a USB memory. Follow the instructions on the screen.

	Download statistics report for the selected period.
	Transfer wash programs to/from the USB memory by drag and drop.
	Upload wash program images from the USB memory. The images must have png-format with the size 165x116 pixels. Select which ones you want to upload.
 	Download or upload (clone) settings/parameters to/from the USB memory. The illustration can be one of the examples.
	Upload chemical images from the USB memory. The images must have png-format with the size 130x116 pixels. Select which ones you want to upload.
 	Upload an image that can be shown as a welcome screen from the USB memory. The image must have png-format with the size 800x480 pixels. Select which one you want to upload. The illustration can be one of the examples.

6 Maintenance

6.1 General

It is the responsibility of the owner of the machine/the laundry manager to make sure that maintenance is periodically performed.

Note!
Lack of maintenance may deteriorate the performance of the machine and may cause damage to components.

6.2 Time for maintenance

When the display is showing the message TIME FOR MAINTENANCE — contact the owner of the machine/the laundry manager to perform maintenance (if available, a telephone number and/or a tag will also be displayed).

The machine can be used meanwhile. However, the message will keep coming back until the service is performed.

The message will disappear after about 30 seconds. The window can also be closed manually.

6.3 Every day

Check that the door is locked during a program. Make sure the door cannot be opened until after the program is complete.

If the door can be opened before program end, the machine must be placed out of order until repairs are made.

Check that the door does not leak.

Clean the door, door glass, door gasket and other external parts.

	Correct use For all surfaces	Use mild cleaning agents, follow daily cleaning schedules, wipe with soft cloths and rinse thoroughly.
	Incorrect use For painted surfaces	**Do not use** polishing agents, abrasive cleaners, bleach or acid descalers.
	Incorrect use For stainless steel surfaces	**Do not use** chlorine bleach, muriatic acid, steel wool, wire brushes or strong clorides.

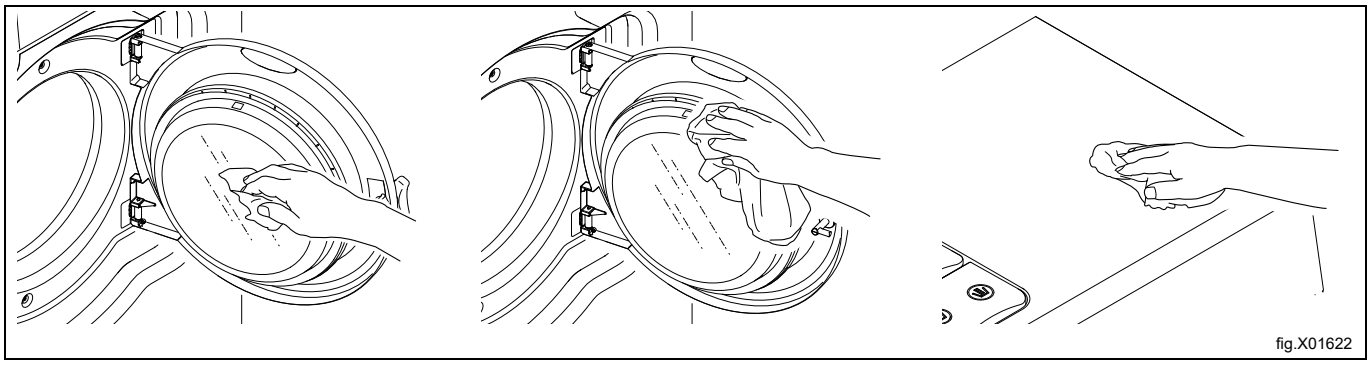

fig.X01622

6.4 Detergent container

Depending on machine type the detergent container is located on top of the machine or on the front of the machine.

Detergent container on top of the machine

Clean the detergent container at regular basis to avoid that it is being clogged by detergent residue. Clean with hot water and for example a small brush.

Carefully pull out the siphons (A) and make sure to also clean the surrounding area. Refit the siphons when ready and then over fill some water into both compartments (A) to flush the compartments.

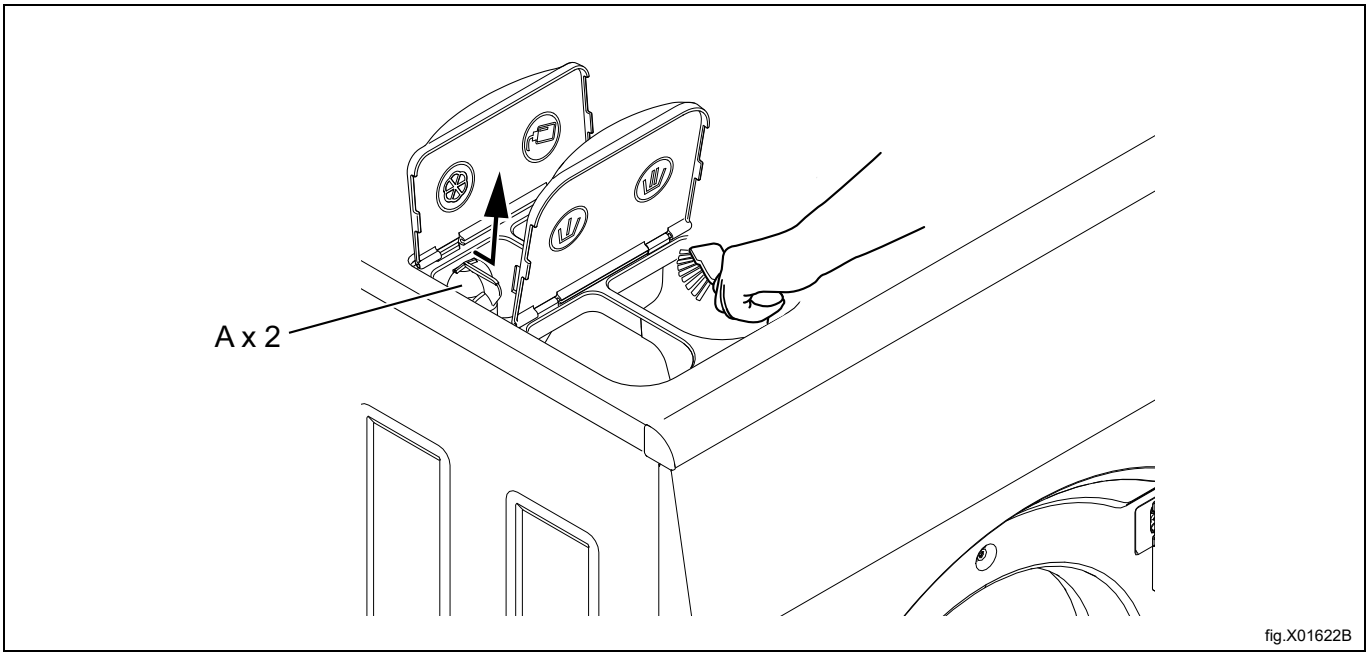

fig.X01622B

Detergent container on the front of the machine

Push to open the detergent container.

To clean the different parts in the container they shall be removed from the container.

Unlock the main compartment with the security snap on each side and remove it from the container.

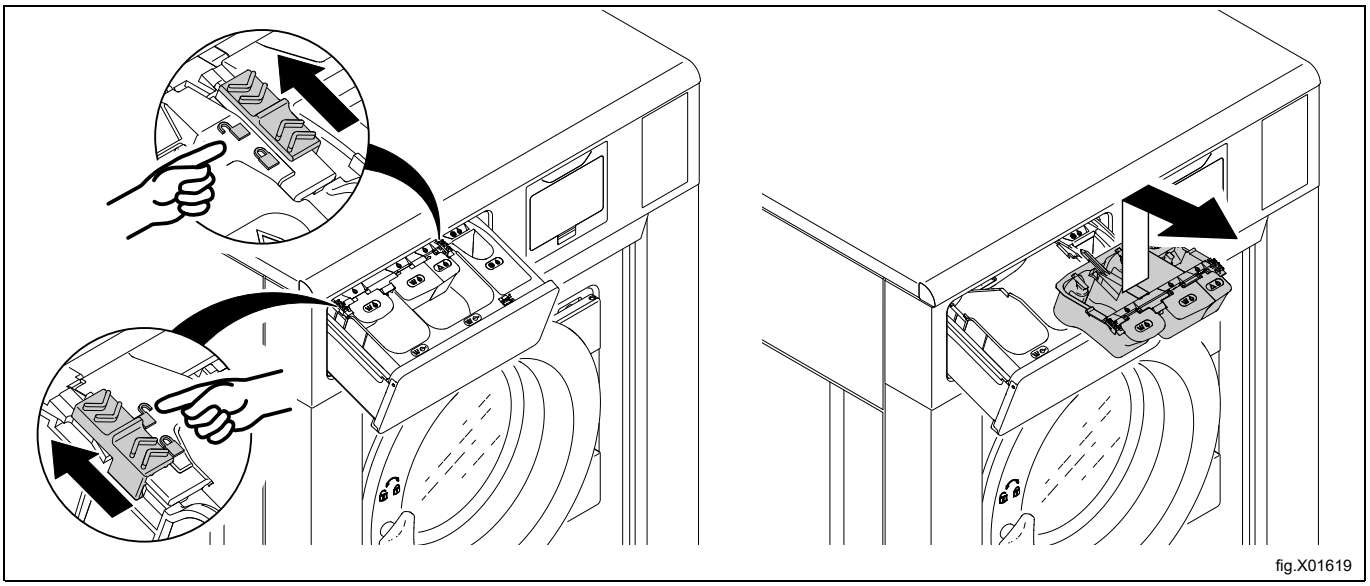

fig.X01619

Unlock the softener compartment with the security snap and remove it from the container.

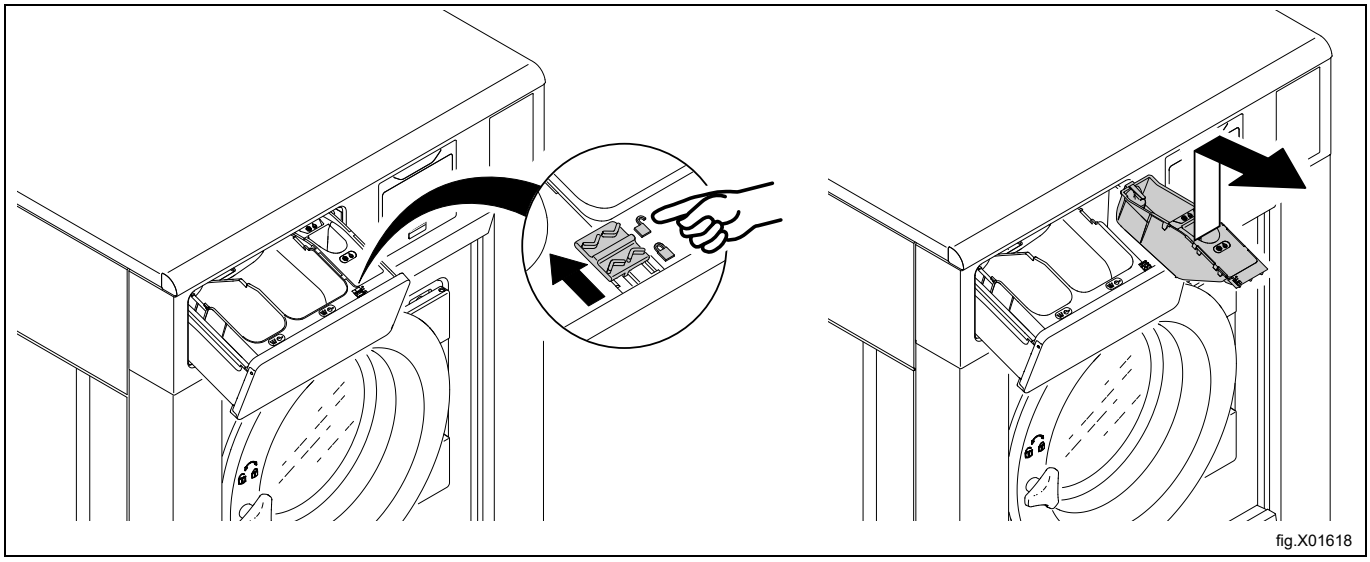

fig.X01618

Remove the siphons and the lid to the softener compartment.
Clean all parts with hot water and for example a small brush.

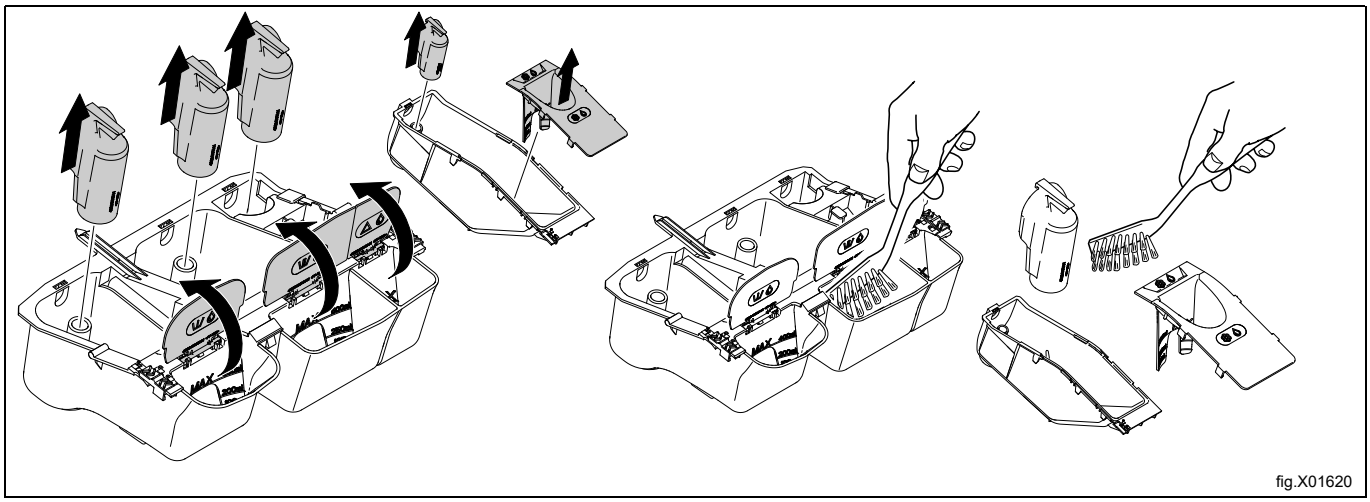

fig.X01620

Clean the detergent container and the area above the detergent container with for example a damp cloth.

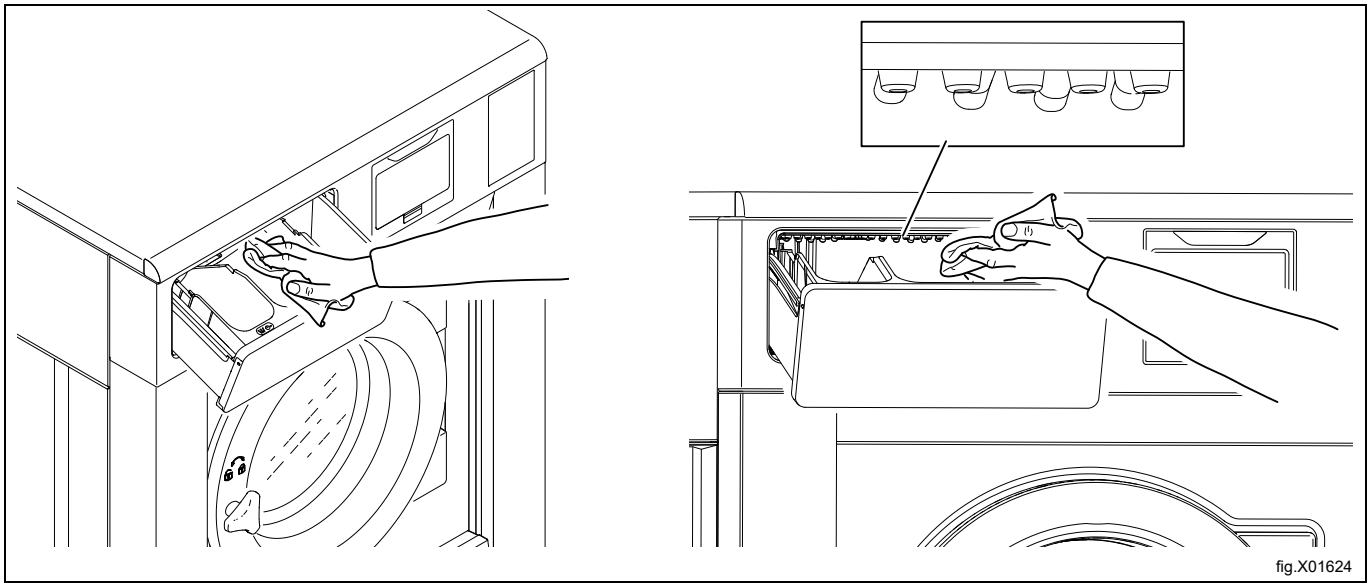

fig.X01624

Remount all parts and insert the compartments in the detergent container. Make sure to lock the compartments when ready.

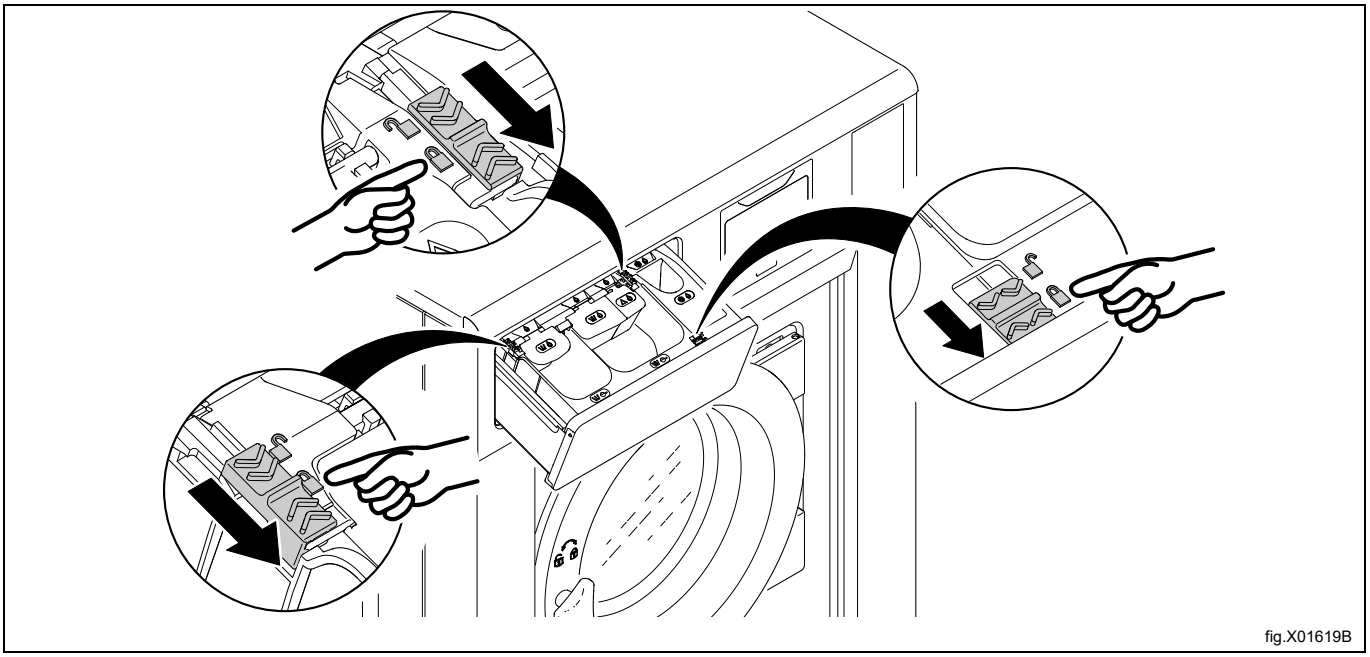

fig.X01619B

6.4.1 Deliming

When deliming is needed:

Use the special machine cleaning program. If the program is not available, use the Settings menu to add the program to the program selection screen.

It is also possible to use a program with high temperature, 95°C, for deliming. Add a deliming agent, for example citric acid.

6.5 Drain

At regular basis, check the drain connection, joints in the drain pipe etc and remove any lint and dust. Clean with for example a small brush. When remounting, make sure the connections are tight.

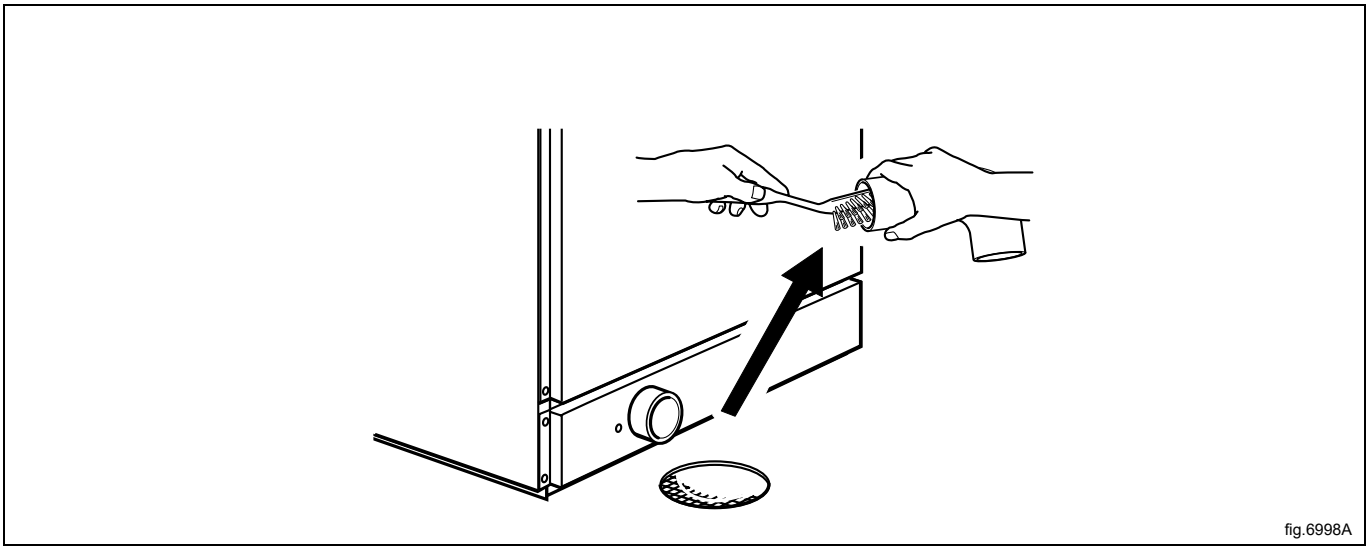

fig.6998A

Note!

Contact qualified service personnel to perform maintenance on the internal drain and hoses once a year.

6.6 Water inlet

At regular basis, check the filter at the water inlet. Clean if necessary.

Demount the hose to the water inlet and pull out the filter (A).

When remounting, make sure the filter is in position and that the connections are tight.

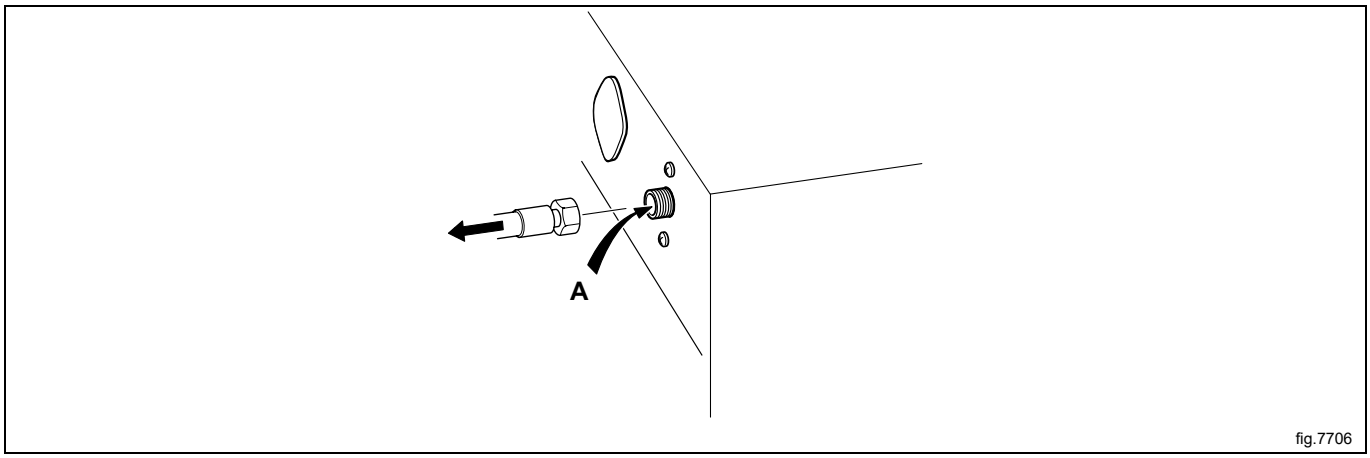

fig.7706

6.7 Cleaning the mop elements

(Only valid for mop machines).

At regular basis, check the mop elements and clean if necessary.

In the inner drum, there is one or two core covers to the heating elements depending on the size of the machine. The front cover is located directly above the drain and the other is in front of the element retainer. Two small screwdrivers are required to remove the core cover.

Use a screwdriver to press down on the retaining plate in the round hole on the core cover.

Place the other screwdriver in the oval hole on the core cover and through the round hole in the retaining plate.

Push the retaining plate towards the screwdriver which is pressing down on the retaining plate.

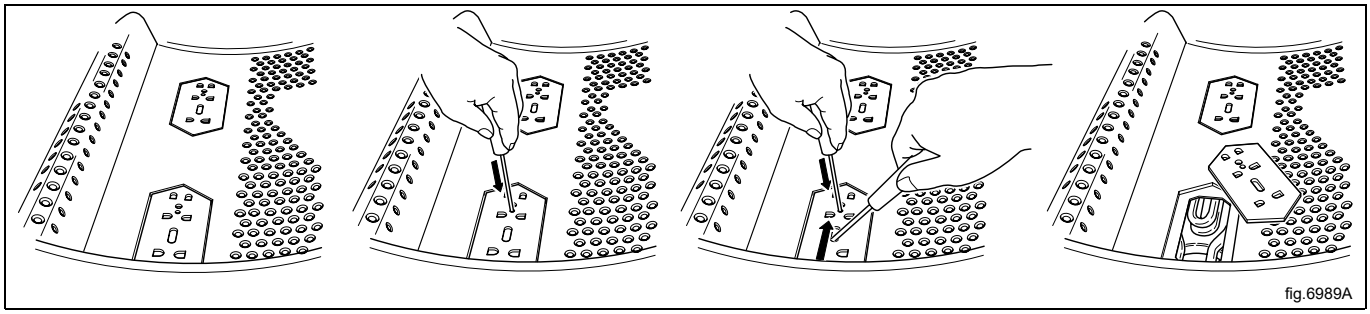

fig.6989A

Remove the core element/elements and clean the elements. If the elements are very dirty, it may be wise to remove the elements from the drum when cleaning them

The core covers are refitted in reverse order, with the difference that it is not necessary to press on the retaining plate; you only need to push the retaining plate back into place. When you hear a clicking sound, the retaining plate is in position.

6.8 Maintenance to be carried out by qualified service personnel

Contact qualified service personnel to perform the following maintenance:

Once a year:

- Inspect the interior of the machine during an actual wash cycle to ensure that no leaks are noticed.
- Clean the internal drain and hoses.
- Check the door and door hinges.

For original spare parts please contact your local authorized dealer.

7 Disposal information

7.1 Appliance recyclability and disposal

7.1.1 Recyclability

Our appliances are manufactured using a significant percentage of recyclable metals (such as stainless steel, iron, aluminium, galvanized sheet, copper, etc.), which can be recovered through the local recycling systems, in compliance with the regulations in force in the country of use.

National regulations regarding waste disposal may vary. Disposal of the appliance must therefore be carried out in accordance with the applicable legislation and the directives issued by the competent authorities in the country where the appliance is decommissioned.

The components of the appliance must be separated and disposed of in accordance with their material composition (e.g. metals, oils, greases, plastics, rubber, refrigerant gases, insulating boards and other insulating material, glass wool, LEDs, etc.) and in full compliance with applicable local and international waste management regulations.

Compressors may contain oils and refrigerants fluids - are special waste and has to be recycled on local bases regulations.

7.1.2 Procedure regarding appliance disposal and component / material recovery

This product should not simply be disposed of in the environment at the end of its life cycle; it is imperative instead either to dispose of it in accordance with local environmental regulations, or, preferably, to deliver it whole to an authorized recycling center.

All removed components, including doors and other structural parts, must be delivered together with the appliance to an authorized recycling or dismantling facility.

The dismantling/recycling center will apply state of the art technologies and methods available to them to effectively disassemble the products for best recyclability.

Note that printed circuit boards, electrical motors or other components identified in European Union legislation to be of high critical raw materials recovery potential need to be addressed specifically.

In case of doubts or questions, always refer to your reference customer care service.

Before disposing of the appliance, carefully inspect its physical condition and preservation state, checking for potential leaks of liquids or gases, as well as for broken parts that may pose hazards during handling and subsequent dismantling.



The symbol on the product indicates that this product should not be treated as domestic waste, but must be correctly disposed of in order to prevent any negative consequences for the environment and human health. For further information on the recycling of this product, contact the local dealer or agent, the customer care service or the local body responsible for waste disposal.

Note!

When dismantling the appliance, any marking, this manual and other documents concerning the appliance must be destroyed.

7.2 Disposal of packing

The packing must be disposed of in compliance with the current regulations in the country where the appliance is used. All the packing materials are environmentally friendly.

They can be safely kept, recycled or burned in an appropriate waste incineration plant. Recyclable plastic parts are marked as following examples.

 PE	Polyethylene: • Outer wrapping • Instructions bag
 PP	Polypropylene: • Straps
 PS	Polystyrene foam: • Corner protectors



Electrolux Professional AB
341 80 Ljungby, Sweden
www.electroluxprofessional.com