Electrolux PROFESSIONAL

Tumble dryer

TD7-7

Electric Vented / Condense

High-Performance Commercial Drying • Built to Last

Designed to maintain correct airflow for maximum performance, ensuring consistent results on a small footprint.

The winner takes it all

With the right combination together with our WP7 washer serie, you can reach unbelievable 15% energy saving in drying.

GREEN FOOTPRINT

Compact size to save space, stock more machines, minimize waste, while multiplying revenues.

OnE Connected

Monitor and control all the operations behind your laundry room, quantifying savings and productivity. Anytime. Anywhere.

UNIVIBE

Fully personalized 4.3" touch panel: UniVibe gives the operator an easy and smooth experience and you will have all the possibilities to adapt for your business requirements.

Main specifications		TD7-7, Exhaust	TD7-7, Condense
Rated capacity, filling factor 1:16	kg / lb	8 / 17.6	8 / 17.6
Rated capacity, filling factor 1:22	kg / lb	6 / 13.2	6 / 13.2
Drum, volume	litre	130	130
Drum, diameter	ø mm	575	575
Heating alternatives:			
EI	kW	3.2 / 5.1	3.0

Consumption data[1]		TD7-7, Exhaust		TD7-7, Condense
		EI 3.2 kW	EI 5.1 kW	EI 3.0 kW
Total time	min	62	41	63
Energy consumption, full load	kWh	3.05	3.02	3.3
Evaporation	g/min	48	73	47
Energy water evaporation	kWh/l	1.03	1.02	1.11

1. At rated capacity 1:22, 100% cotton load at 50% initial moisture dried to 0%.

Electrical connections					
Heating alternative	Main voltage	Hz	Heating power kW	Total power kW	Recommended fuse A
Electric heating	220-240V 1/1N~	50/60	3.2	3.5	16
	220-240V 3~	50/60	5.1	5.4	16
	380-415 3~	50/60	5.1	5.4	10
	440V 3~	50/60	5.1	5.4	10
	480V 3~	60	5.1	5.4	10
	220V 3~	60	4.7	5.0	16
	380V 3/3N~	60	4.6	4.9	10
	440V 3~	60	2.6	2.9	10
	230V 1N~	50	2.6	2.9	13
Condense	220-240V 1/1N~	50/60	3.0	3.3	16
	220-240V 3~	50/60	3.0	3.3	13
	380-415 3~	50/60	3.0	3.3	10
	440V 3~	50/60	3.0	3.3	10
	220-240V 1/1N~	50/60	2.7	3.0	13

Connections		TD7-7, Exhaust	TD7-7, Condense
Air outlet	ø mm	100	-
Maximum air flow	m^3/h	240	-
Condensate		-	1/2"
Maximum static back pressure	Pa	80	-
Sound levels			
Sound power/pressure level at drying[1]	dB(A)	67/53	67/53
Heat emission			
% of installed power, max		15	15
Shipping data[2]			
Weight	net, kg	58	57
Shipping volume	m^3	0.51	0.63

1. Sound power levels measured according to ISO 60704.
2. Average data. Crated weight/shipping volume depends on configuration. Please contact logistics for exact measures.

Produced according to ISO 9001 and ISO 14001.
Certified with CB certificate for Low Voltage Directive and S-mark according to the Machinery Directive. Protection class IP X4D.
For optimal performance the room temperature should not exceed 25°C for the condensed version.
Silver grey and dark blue color samples can be ordered on part number 472998313.

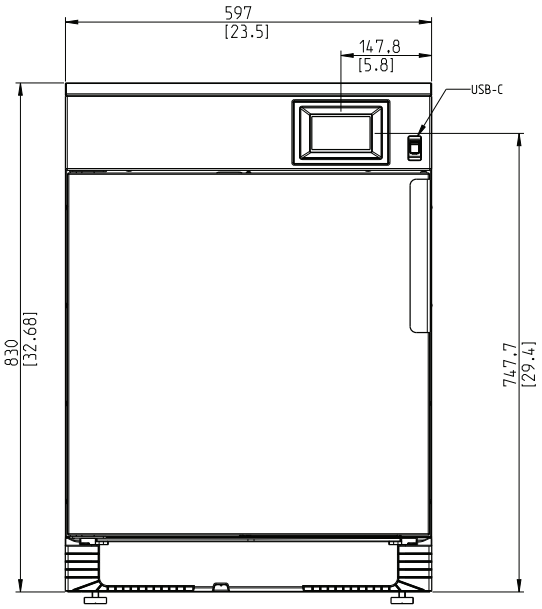
597
[23.5]
147.8
[5.8]
USB-C
830
[32.68]
747.7
[29.4]

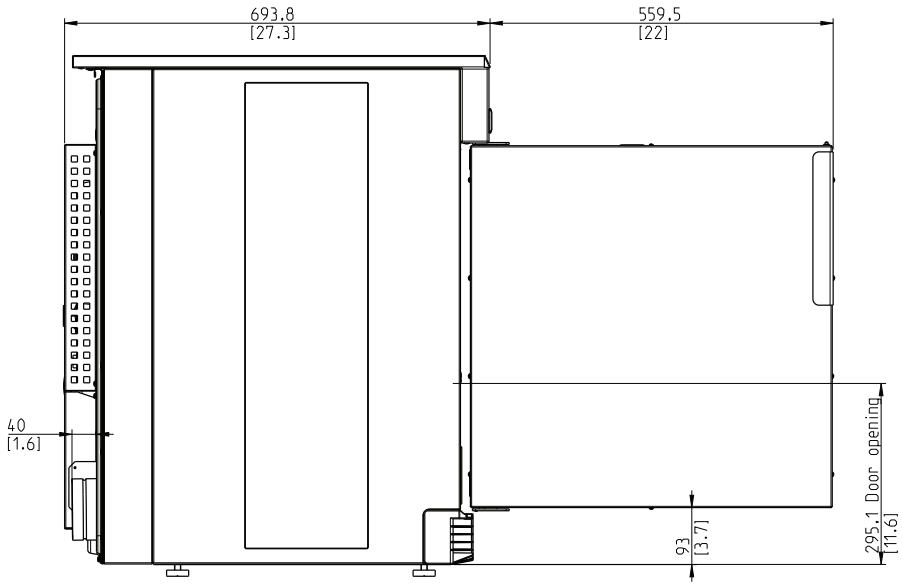
693.8
[27.3]
559.5
[22]
40
[1.6]
93
[3.7]
295.1 Door opening
[11.6]

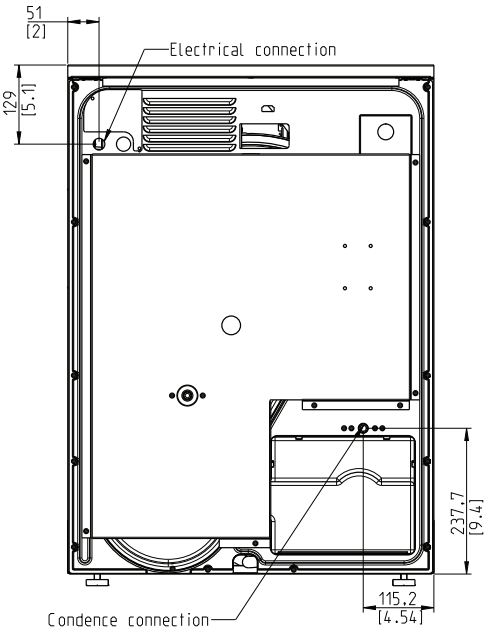
51
[2]
Electrical connection
129
[5.1]
237.7
[9.4]
115.2
[4.54]
Condence connection

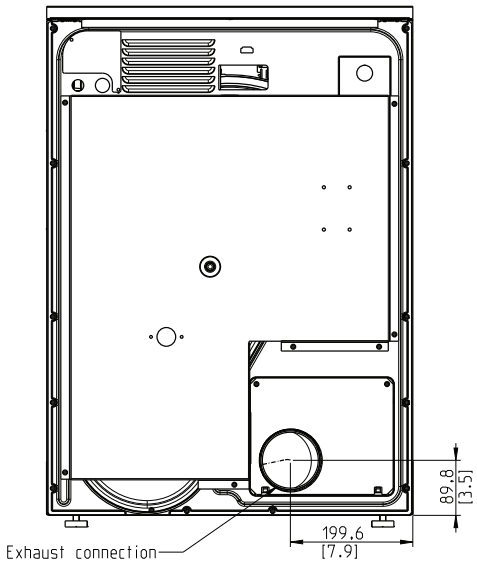
89.8
[3.5]
199.6
[7.9]
Exhaust connection

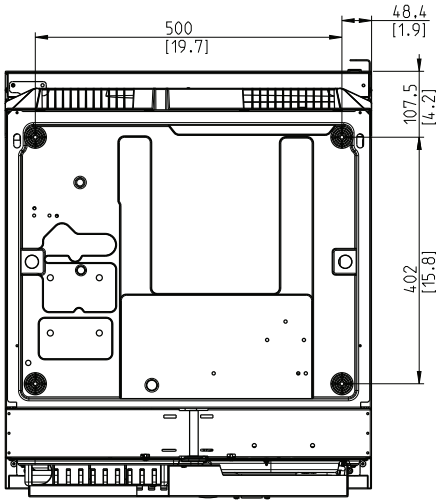
500
[19.7]
48.4
[1.9]
107.5
[4.2]
402
[15.8]

Options and accessories

- Stainless steel front
- Connectable to booking-/payment system or coin meter
- Stacking frame for mounting TD7-7 on top of WP7 washer series
- Integrated condense system
- Base for better ergonomic height

We reserve the right to alter specifications without notice