Electrolux PROFESSIONAL

Washer extractor

The Compact Power
WP7-8

The Compact Power - Generation 7000

The New Generation 7000 delivers Ultimate Performance with space saving footprint. Designed and tested for longest lifetime with outstanding 40 000 cycles!
– A sustainable and long term investment

Your Savings Start in the Washer and you will benefit from lowest life cycle costs where it matters most: Water, Energy and detergents.

The New and Unique touch display UniVibe offers the best user experience. The Compact Power has endless possibilities for a wide range of applications, including

- Facility management and Cleaning
- Multi-housing and Shared laundries
- Care homes, Institutions and Municipality facilities
- Schools and Daycare centres
- Hotels and Restaurants
- Marine environments

40,000 WASH CYCLES

Longest lifetime: 40 000 cycles.
Durability is the new profit: the only investment that wins your trust cycle by cycle.

MINIMUM WATER USE

Saving the Planet: Sustainable at every laundry step, reducing water consumption year by year.

LOWEST RESIDUAL MOISTURE

Lowest Residual Moisture: 40% Saving time and energy in the dryer.

SWEDISH ENGINEERING

A strong heritage and decades of consolidated Research and development deliver long-lasting quality and proven reliability.

OnE Connected

Monitor and control all the operations behind your laundry room, quantifying savings and productivity. Anytime. Anywhere.

UNIVIBE

Fully personalized 4.3" touch panel: UniVibe gives the operator an easy and smooth experience and you will have all the possibilities to adapt for your business requirements.

Main specifications		WP7-8
Rated capacity	kg/lb	8 / 18
Drum, volume	litre	75
Drum, diameter	ø mm	480
Languages active from the start		25
Extraction	rpm	1495
G-factor		600
Standard heating alternatives	electricity, kW	4.6

Consumption data "ECO 60"[1]		Full load, 8 kg	Half load, 4 kg
Total time	min	51	51
Water consumption (cold)	litre	40	20
Energy consumption (motor / heating)	kWh	0.19 / 0.94	0.19 / 0.50
Residual moisture	%	40	41

1. Cold water temperature 15°C.

Electrical connections					
Heating alternative	Main voltage	Hz	Heating power kW	Total power kW	Recommended fuse A
Electric heated	220-240V 1N~	50/60	2.3/4.6[1]	2.6/4.9	13/25
	220-240V 3~	50/60	4.6[1]	4.9	20
	380-415V 3N~	50/60	4.6[1]	4.9	10
	400V 3N~	50/60	3.2	3.5	10
	380-415V 3~	50/60	3.4[1]	3.7	10
	440V 3~	50/60	3.9	4.2	10
	480V 3~	50/60	4.6	4.9	10
Non heated	220-480V 1/1N/3/3N~	50/60	[2]	1.25	10

1. Nominal heating power.
2. Total power and recommended fuse does not depend on the heating power in those cases.

Water and steam connection[1]		
Water valves	DN	20
Water pressure	kPa	200-600
Capacity at 300 kPa	l/min	20
Drain outlet	ø mm	50/75
Draining capacity	l/min	170
Liquid detergent supplies		5
Sound levels		
Sound power/pressure level at extraction[2]	dB(A)	75.9/61.5
Sound power/pressure level at wash[2]	dB(A)	57/43
Heat emission		
% of installed power, max		5
Shipping data[3]		
Weight	net, kg	115
Shipping volume	m^3	0.55
Accessories[4]		
Steel base		x
Hose kits for water or steam		x
Fluff collector		x

1. The washer extractor is equipped with a built-in type AB airgap according to EN 61770. Maximum working pressure for Australia is 800 kPa.
2. Sound power levels measured according to ISO 60704.
3. Average data. Crated weight/shipping volume depends on configuration. Please contact logistics for exact measures.
4. x = Available.

Produced according to ISO 9001 and ISO 14001.
Certified with CB certificate for Low Voltage Directive and S-mark according to the Machinery Directive. Protection class IP X4D.
Silver grey and dark blue color samples can be ordered on part number 472998313.

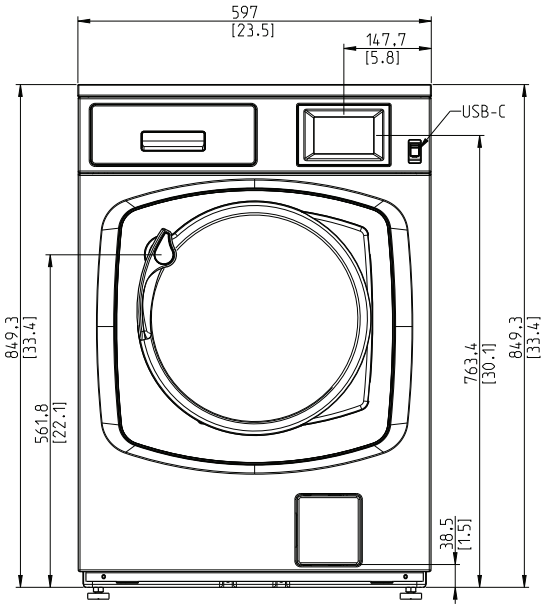
597
[23.5]
147.7
[5.8]
USB-C
849.3
[33.4]
561.8
[22.1]
763.4
[30.1]
849.3
[33.4]
38.5
[1.5]

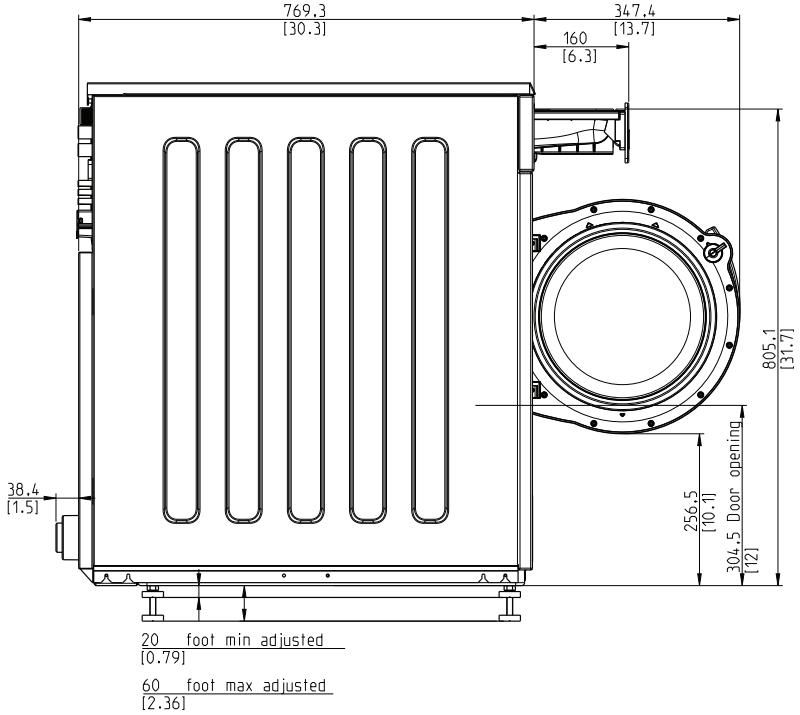
769.3
[30.3]
347.4
[13.7]
160
[6.3]
805.1
[31.7]
38.4
[1.5]
256.5
[10.1]
304.5 Door opening
[12]
20 foot min adjusted
[0.79]
60 foot max adjusted
[2.36]

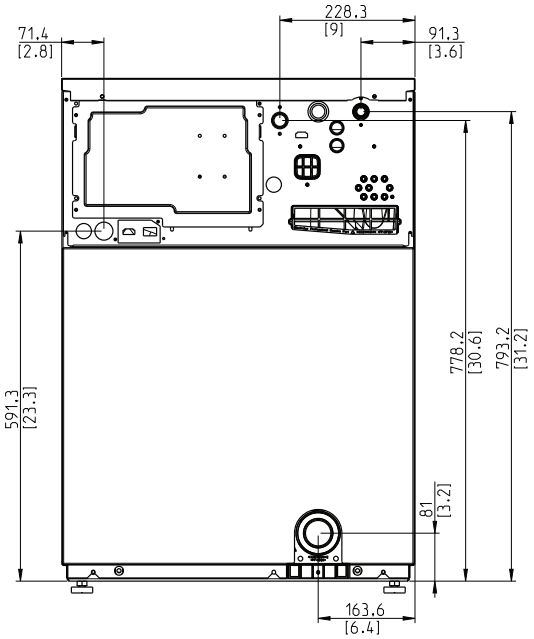
228.3
[9]
71.4
[2.8]
91.3
[3.6]
591.3
[23.3]
778.2
[30.6]
793.2
[31.2]
81
[3.2]
163.6
[6.4]

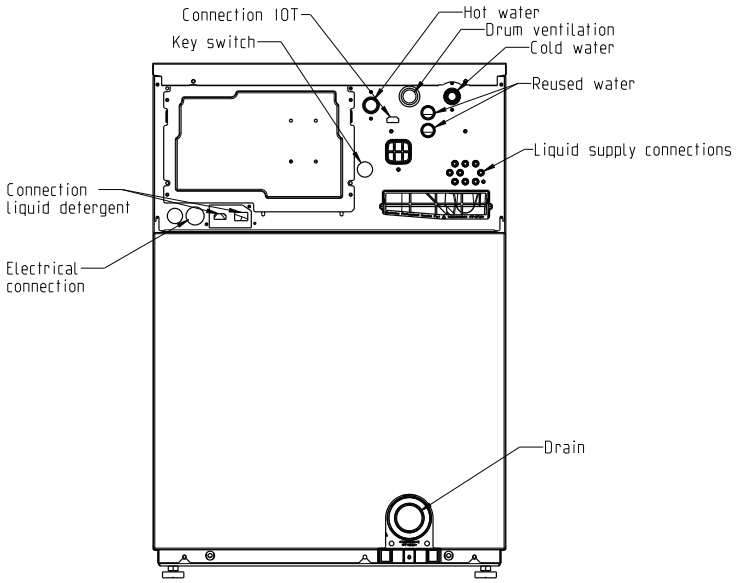
Connection IOT
Key switch
Hot water
Drum ventilation
Cold water
Reused water
Liquid supply connections
Connection
liquid detergent
Electrical
connection
Drain

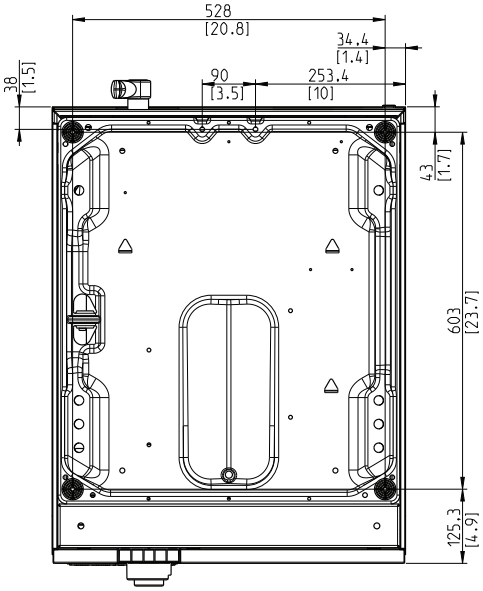
528
[20.8]
34.4
[1.4]
38
[1.5]
90
[3.5]
253.4
[10]
43
[1.7]
603
[23.7]
125.3
[4.9]

Complete Solution for Maximum Efficiency

Pair the WP7 washer with our TD7 tumble dryer series for Fastest "dry-to-dry" process. Complete your solution with Electrolux Professional Dosing Pumps and smart accessories to unlock even greater benefits: Lower operational costs, Improved ergonomics for staff

Options & kits

- Drain pump
- Detergent box in front
- Marine kit
- One Connected
- Connectable to booking-/payment system or coin meter

Accessories

- Automatic Dosing pumps
- Detergents & Detergent cabinets
- Water hoses, steam hoses
- Trolleys

Bases & Stacking kits and fluff collectors

- Fluff collector – Minimize the dirt and fluff in the drain
- Base – Ergonomic solution or alignment on top
- Stacking kit – For small spaces

We reserve the right to alter specifications without notice