Washer extractor

WS6-8 Compass Pro

Washer featuring exceptional savings and effortless use



Images shown are a representation of the product only and variations may occur.

Priority on people

Certified ergonomic design with a human-centered approach for an outstanding user experience

Compass Pro® microprocessor offers:

- Easy program selection
- Language selection
- Quick selection and option buttons for the most frequently used wash programs and options
- Wash program packages optimized on Economy, Performance and Time

Long-term savings

Extremely low water and energy consumption – see table below

- Automatic Savings weighs the linen and adjusts the water level to the amount of linen, saving water and energy at less than full load
- High extraction force for efficient dewatering
- Super Balance guarantees the correct extraction force

Pure control

Monitoring of the status of the equipment and performance from anywhere, allowing to take action to improve the business

- Washers connectable to OnE Laundry, the personal assistant for hygiene validation, process management and revenue management

Global Advanced Hygiene

Global Advanced Hygiene program package* with proven log 6 reduction** disinfection of textiles through the laundry process, fulfilling the criteria of all local approved standards

Main options

- Automatic liquid detergent supply (optional I/O board)
- Savings on chemicals with help of Efficient dosing, both ED peristaltic pumps and ED Venturi
- Connection to booking- /payment- system or coin meter

* Programs available in the standard library of all products, excluding products for specific segments where water temperature is not controllable.

** Log 6 reduction equals to 99,9999% viral infectivity reduction. The efficacy of reduction of SARS-CoV-2 and other pathogens in the process is confirmed by RISE (The Research Institute of Sweden) on the basis of Electrolux Professional laboratory data.

Main specifications			WS6-8			
Rated capacity, filling factor 1:9		kg/lb	8/18			
Drum, volume		litre	75			
diameter		ø mm	520			
Extraction		rpm	830			
G-factor			200			
Standard heating alternatives	electricity	kW	5.4 / 7.5			
Low energy heating alternatives	electricity	kW	2.0 / 3.0			
	steam		x			
	non-heated		x			
Consumption data "Normal 60°C"*			El		Steam***	
			Full load, 8 kg	Half load**, 4 kg	Full load, 8 kg	Half load**, 4 kg
Total time		min	49	45	49	45
Water consumption (cold+hot)		litre	53+13	28+7	66+0	35+0
Energy consumption (motor/heating/hot water)		kWh	0.1/0.4/0.8	0.1/0.25/0.45	0.1/-	0.1/-
Steam consumption		kg	-	-	1.8	1.0
Residual moisture		%	58	66	58	66

* Water temperature 15°C cold water and 65°C hot water.
** Programs with AS.
*** Depending on steam pressure.

Produced according to ISO 9001 and ISO 14001.
Certified with CB certificate for Low Voltage Directive and S-mark according to the Machinery Directive. Protection class IP X4D.

Electrical connections					
Heating alternative	Main voltage	Hz	Heating power kW	Total power kW	Recommended fuse A
Electric heated	220-240V 1/1N ~	50/60	2.0/3.0	2.3/3.4	16/16
	220-240V 1/1N ~	50/60	5.4/7.5	5.7/7.8	25/32
	220-240V 3 ~	50/60	2.0/3.0	2.2/3.4	10/10
	220-240V 3 ~	50/60	5.4/7.5	5.7/7.8	16/25
	380-415V 3N/3 ~	50/60	2.0/3.0	2.2/3.4	10/10
	380-415V 3N/3 ~	50/60	5.4/7.5	5.7/7.8	10/16
	440V 3 ~	50/60	5.4/7.5	5.7/7.9	10/16
	480V 3 ~	60	5.4/7.5	5.7/7.9	10/16
Steam or Non heated	208-240V 1/1N ~	50/60	*	1.0	10
	380-480V 1 ~ (**)	50/60	*	1.0	10

* Total power and recommended fuse does not depend on the heating power in those cases.

** Prepared for 3 ~.

Water and steam connection		WS6-8
Water valves	DN	20
Water pressure	kPa	200-600
Capacity at 300 kPa	l/min	20
Drain valve	ø mm	75
Draining capacity	l/min	170
Steam valve	DN	15
Steam pressure	kPa	300-600
Liquid detergent supplies		5
Floor requirements		
Frequency of the dynamic force	Hz	13.8
Floor load at max extraction	kN	1.6 ± 3.4
Sound levels		
Sound power/pressure level at extraction*	dB(A)	73/59
Sound power/pressure level at wash*	dB(A)	62/48
Heat emission		
% of installed power, max		5
Shipping data**		
Weight	net, kg	116
Shipping volume	m^3	0.75
Accessories		
Steel base		x
Hose kits for water or steam		x
Fluff collector		x
Dimensions in mm		
A Width		660
B Depth		680
C Height		1135
D1		360
D2		425
E		1110
F		835
G		80
H		1035
I		215
J		125
K		1015
L		915
M		280
N		100
O		200

1 Operating panel
2 Door opening ø 310 mm
3 Detergent box
4 Cold water
5 Hot water
6 Re-used water
7 Drain valve
8 Liquid detergent supply
9 Electrical connection
10 Steam connection

Front and side panels in silver grey and dark blue (color samples can be ordered on part number 472998313).

* Sound power levels measured according to ISO 60704.

** Average data. Crated weight/shipping volume depends on configuration. Please contact logistics for exact measures.

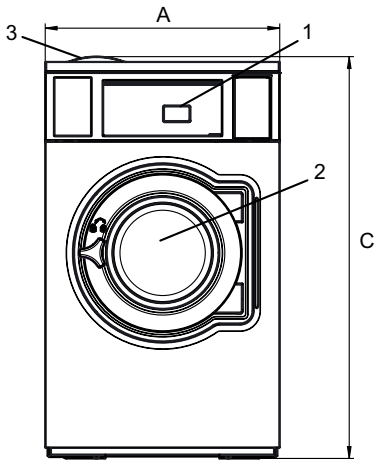

Front

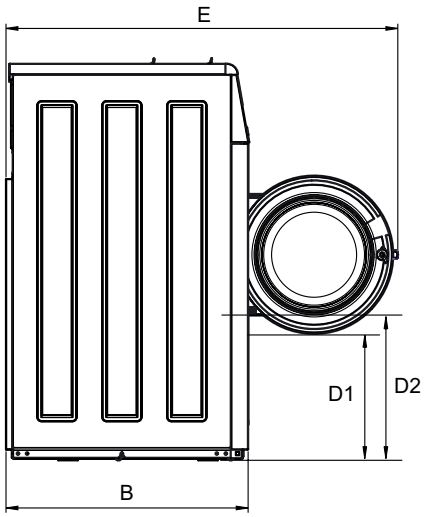

Side view

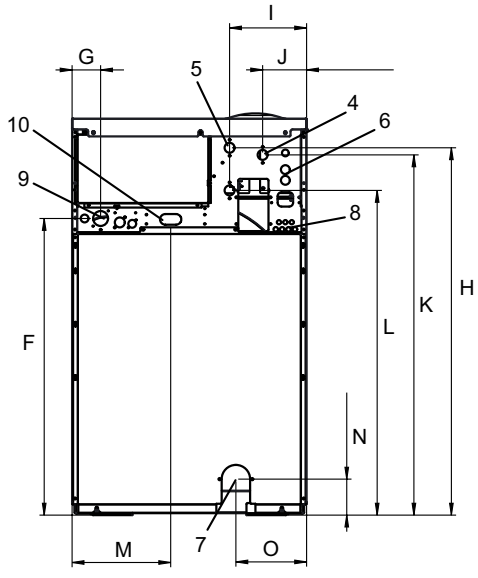

Rear

Experience the Excellence
www.electroluxprofessional.com

Art. No. 438918010EN/2022.06.22
We reserve the right to alter specifications without notice.