wascomat

PROFESSIONAL LAUNDRY

Washer extractor

H7-240

Features and benefits

- **Intelligent controller offers:**
  - Large display and one control knob for easy program selection
  - Language selection
  - Create new programs in your PC with the Laundry Program Manager, then transfer them to machines via USB port
  - Wash program packages optimized on Economy, Perfomance and Time. (Available on general programs)
- Low water and energy consumption – see table below
- Four compartment detergent box for manual dosing of powder or liquid detergent
- High extraction force for efficient dewatering
- Door with gasket and strong hinges built for heavy duty operation
- Stainless and galvanized steel in all vital parts for high degree of rust protection
- **Proven robustness:**
  - Maximises the extraction force, leading to highest dewatering and savings in drying
  - Minimizes the stress on the machine, leading to trouble-free operation and increased machine lifetime
  - Reduces vibrations, making it possible to install the machine in all locations

Images shown are a representation of the product only and variations may occur.

Main options

- Automatic liquid detergent supply (optional I/O board)
- Connection to booking- /payment- system or coin meter

Main specifications			H7-240	
Max. capacity	filling factor 1:9	kg/lb	27	
Drum,	volume	litre	240	
	diameter	ø mm	795	
Extraction		rpm	1005	
G-factor			400	
Standard heating alternatives	electricity	kW	23.0	
Low energy heating alternatives	electricity	kW	19.1* / 19.8*	
	steam		x	
	non-heated		x	
Consumption data "Normal 60°C" Economy**			El	Steam**
Total time		min	48	48
Water consumption (cold+hot)		litre	167+42	209+0
Energy consumption (motor/heating/hot water)		kWh	0.6/1.2/2.65	0.6/-
Steam consumption		kg	-	5.78

* Special requirement on request.
** Water temperature 15°C cold water and 65°C hot water.
*** Depending on steam pressure.

Produced according to ISO 9001 and ISO 14001.
Certified with CB certificate for Low Voltage Directive and S-mark according to the Machinery Directive. Protection class IP X4D.

Electrical connections					
Heating alternative	Main voltage	Hz	Heating power kW	Total power kW	Recommended fuse A
Electric heated	220-240V 3 ~	50/60	19.8/23.0	20.5/23.7	63
	380-415V 3 ~	50/60	19.8/23.0	20.5/23.7	35/50
	440V 3 ~	60	21.0/23.0	21.7/23.7	35
	480V 3 ~	60	22.8/23.0	23.5/23.7	35
	220-230V 3 ~	50/60	19.1	19.8	63
	380-400V 3 ~	50/60	19.1	19.8	35
Steam or Non heated	220-240V 1 ~	50/60	-	2.5	16
	380-480V 1 ~	50/60	-	2.5	10

Water and steam connection		H7-240
Water valves	DN	20
Water pressure	kPa	200-600
Capacity at 300 kPa	l/min	60
Drain valve	ø mm	75
Draining capacity	l/min	170
Steam valve	DN	15
Steam pressure	kPa	300-600
Liquid detergent supplies		5
Floor requirements		
Frequency of the dynamic force	Hz	16.8
Floor load at max extraction	kN	5.2 ± 1.0
Sound levels		
Sound power/pressure level at extraction*	dB(A)	83/68
Sound power/pressure level at wash*	dB(A)	64/48
Heat emission		
% of installed power, max		5
Shipping data**		
Weight	net, kg	425
Shipping volume	m^3	1.82
Accessories		
Steel base		x
Hose kits for water or steam		x
Dimensions in mm		
A Width		1020
B Depth		990
C Height		1462
D1		492
D2		557
E		1545
F		1165
G		135
H		1364
I		401
J		301
K		1324
L		1244
M		333
N		100
O		359

1 Operating panel
2 Door opening ø 435 mm
3 Detergent box
4 Cold water
5 Hot water
6 Re-used water
7 Drain
8 Liquid detergent supply
9 Electrical connection
10 Steam connection

* Sound power levels measured according to ISO 60704.

** Average data. Crated weight/shipping volume depends on configuration. Please contact logistics for exact measures.

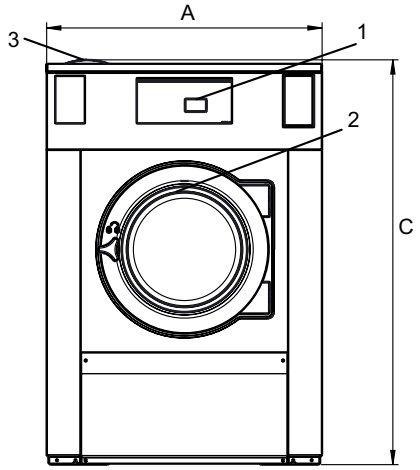

Front

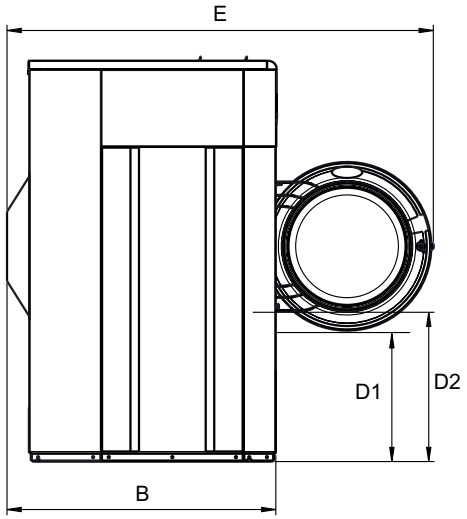

Side view

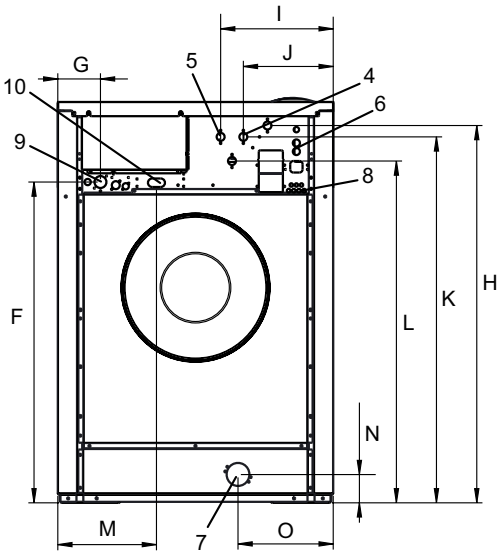

Rear

Art. No. 438919461EN/2018.10.16

We reserve the right to alter specifications without notice.