Sink

EN Installation and operating manual *

*Original instructions

599A0V402 - 2026.09

Foreword

Read the following instructions, including the warranty terms before installing and using the appliance.

Visit our website www.electroluxprofessional.com and open the Support section to:

Register your product

Get hints & tips of your product, service and repair information

The installation, use and maintenance manual (hereinafter Manual) provides the user with information necessary for correct and safe use of the appliance.

The following must not be considered a long and exacting list of warnings, but rather a set of instructions suitable for improving appliance performance in every respect and, above all, preventing injury to persons and animals and damage to property due to improper operating procedures.

All persons involved in appliance transport, installation, commissioning, use and maintenance, repair and disassembly must consult and carefully read this manual before carrying out the various operations, in order to avoid wrong and improper actions that could compromise the appliance's integrity or endanger people. Make sure to periodically inform the user regarding the safety regulations. It is also important to instruct and update personnel authorised to operate on the appliance, regarding its use and maintenance.

The manual must be available to operators and carefully kept in the place where the appliance is used, so that it is always at hand for consultation in case of doubts or whenever required.

If, after reading this manual, there are still doubts regarding appliance use, do not hesitate to contact the Manufacturer or the authorised Service Centre to receive prompt and precise assistance for better operation and maximum efficiency of the appliance. During all stages of appliance use, always respect the current regulations on safety, work hygiene and environmental protection. It is the user's responsibility to make sure the appliance is started and operated only in optimum conditions of safety for people, animals and property.

IMPORTANT

- The manufacturer declines any liability for operations carried out on the appliance without respecting the instructions given in this manual.
- The manufacturer reserves the right to modify the appliances presented in this publication without notice.
- No part of this manual may be reproduced.
- This manual is available in digital format by:
  - contacting the dealer or reference customer care;
  - downloading the latest and up to date manual on the web site www.electroluxprofessional.com;
- The manual must always be kept in an easily accessed place near the appliance. Appliance operators and maintenance personnel must be able to easily find and consult it at any time.

QR Code

Find the QR code identification sticker on the first page of this guide or on appliance to access the website and free open data/files (PNC/serial number, video, documentation etc.).

Make sure to have the application for QR code reading on your device and an internet connection.

Scan the QR code to consult the available documents for this appliance.

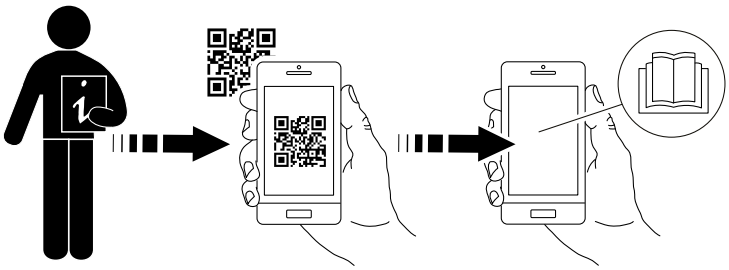

Contents

A WARNING AND SAFETY INFORMATION 5
A.1 General information 5
A.2 Personal protection equipment 6
A.3 General safety 6
A.4 Protection devices installed on the appliance 7
A.5 Safety signs to be placed on the appliance or near its area 7
A.6 Reasonably foreseeable improper use 8
A.7 Residual risks 8
A.8 Transport, handling and storage 9
A.9 Installation and assembly 9
A.10 Water connection 9
A.11 Positioning 10
A.12 Appliance space limitations 10
A.13 Appliance cleaning 10
A.14 Preventive Maintenance 10
A.15 Parts and accessories 10
A.16 Precautions for use and maintenance 10
A.17 Appliance maintenance 11
A.18 Appliance disposal 11
B WARRANTY TERMS AND EXCLUSIONS 11
C TECHNICAL DATA 12
C.1 Data plate position 12
C.2 Appliance and manufacturer's identification data 12
C.3 How to interpret the factory description 12
D GENERAL INFORMATION 12
D.1 Introduction 12
D.2 Intended use and restrictions 12
D.3 Testing and inspection 13
D.4 Copyright 13
D.5 Keeping the manual 13
D.6 Recipients of the manual 13
D.7 Definitions 13
D.8 Responsibility 13
D.9 Customer packaging checks 13
D.10 Storage 13
E INSTALLATION DIAGRAMS 14
E.1 Installation type 14
E.2 Dimension drawings for floor installations 14
E.3 Installation and connection diagram 16
E.4 Accessing the appliance’s internal components 18
F INSTALLATION AND ASSEMBLY 18
F.1 Introduction 18
F.2 Before installation 18
F.3 Installing on concrete plinth 18
F.4 Installing on steel plinth or adjustable feet 18
F.5 Disposal of packing 19
F.6 Securing or adjusting to the floor (optional) 19
F.7 Wall installation 19
F.7.1 Preparing the brackets 19
F.7.2 Positioning 20
F.7.3 Securing and set up 20
F.8 Fastening multiple appliances together 20
F.9 Side panels and base models 21
F.10 Fixing the side panels with a 12,5 mm overhang 21
F.11 Fixing the side cover without overhang 22
F.12 Sealing 23
F.13 Handrail (optional) 23
G CONNECTING THE WATER SUPPLY 23
G.1 Water connection 23
G.2 Drinking water supply 23
G.3 Backflow protection 23
H NORMAL APPLIANCE USE 23
H.1 Characteristics of personnel enabled to operate on the appliance 23
H.2 Basic requirements for appliance use 23
I APPLIANCE CLEANING AND MAINTENANCE 24
I.1 Care information 24
I.2 Cleaning introduction 24
I.3 Stainless steel surfaces 24
I.4 Colored surfaces 24
I.5 Descaling 24
I.6 Periods of non-use 24
I.7 Informations for maintenance 25

I.8 Maintenance intervals 25
J TROUBLESHOOTING 25
J.1 Introduction 25
J.2 Troubleshooting 25
K APPLIANCE DISPOSAL 26
K.1 Procedure regarding appliance disposal 26
K.1.1 Recyclability 26
K.1.2 Procedure regarding appliance disposal and component / material recovery 26

A WARNING AND SAFETY INFORMATION

A.1 General information

To ensure safe use of the appliance and a proper understanding of the manual it is necessary to be familiar with the terms and typographical conventions used in the documentation. The following symbols are used in the manual to indicate and identify the various types of hazards:

WARNING
Danger for the health and safety of operators.

WARNING
Danger of electrocution - dangerous voltage.

CAUTION
Risk of damage to the appliance or the product.

IMPORTANT
Important instructions or information on the product

Equipotentiality

Read the instructions before using the appliance

Clarifications and explanations

- Only specialised personnel are authorised to operate on the appliance.
- This appliance is to be intended for commercial and collective use, for example in kitchens of restaurants, canteens, hospitals and in commercial enterprises such as bakeries, butcheries, etc., not for continuous mass production of food. Any other use is deemed improper.
- The appliance is not intended to be used in an area open to the public.
- This appliance must not be used by minors and adults with limited physical, sensory or mental abilities or without adequate experience and knowledge regarding its use.
- Do not let children play with the appliance.
- Keep all packaging and detergents away from children.
- For your safety do not store or use gasoline or other flammable materials, vapours and liquids in the vicinity of this or any other appliance.
- Do not store explosive substances, such as pressurized containers with flammable propellant, in this appliance.
- Refer to the data given on the appliance’s data plate for relations with the Manufacturer (e.g. when ordering spare parts, etc.).
- When scrapping the appliance, the marking CE must be destroyed.
- Save these instructions carefully for further consultation by the various operators.

A.2 Personal protection equipment

Summary table of the Personal Protection Equipment (PPE) to be used during the various stages of the appliance's service life.

Stage	Protective garments	Safety footwear	Gloves	Glasses	Safety helmet
Transport	—	●	○	—	○
Handling	—	●	●	—	—
Unpacking	○	●	●	—	—
Installation	—	●	●[1]	—	—
Normal use	○	○	○[2]	○	—
Adjustments	—	○	—	—	—
Routine cleaning	○	●	●[1–3]	○	—
Extraordinary cleaning	○	●	●[1–3]	○	—
Maintenance	○	●	●	—	—
Dismantling	○	●	●	—	—
Scrapping	○	●	●	—	—
Key:					
●	**PPE REQUIRED**				
○	**PPE AVAILABLE OR TO BE USED IF NECESSARY**				
—	**PPE NOT REQUIRED**				

1. During these operations, gloves must be cut-resistant. Failure to use the personal protection equipment by operators, specialized personnel or users can involve exposure to harm to health (depending on the model).
2. During these operations, gloves must be heatproof to protect hands from contact with hot food or hot parts of the appliance and/or when removing hot items from it. Failure to use the personal protection equipment by operators, specialised personnel or users can involve exposure to chemical risk and cause possible harm to health (depending on the model).
3. During these operations, gloves must be suitable for contact with chemical substances used (refer to the safety data sheet of the substances used for information regarding the required PPE). Failure to use the personal protection equipment by operators, specialized personnel or users can involve exposure to chemical risk and cause possible harm to health (depending on the model).

A.3 General safety

- The appliances are provided with electric and/or mechanical safety devices for protecting workers and the appliance itself.
- Never operate the appliance, removing, modifying or tampering with the guards, protection or safety devices.
- Do not make any modifications to the parts supplied with the appliance.
- Several illustrations in the manual show the appliance, or parts of it, without guards or with guards removed. This is purely for explanatory purposes. Do not use the appliance without the guards or with the protection devices deactivated.

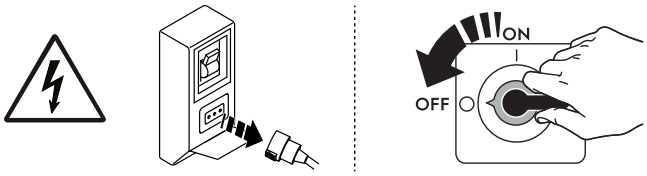

Disconnect the appliance from the power supply before carrying out any installation, assembly, cleaning or maintenance procedure.

- Do not remove, tamper with or make illegible the CE marking, the safety, danger and instruction signs and labels on the appliance.
- The A-weighted emission sound pressure level does not exceed 70 dB(A).
- Do not use products (even if diluted) containing chlorine (sodium hypochlorite, hydrochloric or muriatic acid, etc.) to clean the appliance or the floor under it.
- Carefully avoid exposure of the equipment to ozone - do not use ozonizers in the rooms where the equipment is installed.
- Do not spray aerosols in the vicinity of this appliance while it is in operation.
- The following operations have to be carried out by specialised authorised personnel or Customer Care Service provided with all the appropriate personal protection equipment (A.2 *Personal protection equipment*), tools, utensils and ancillary means, who can ask the manufacturer to supply a servicing manual:
  - Installation and assembly
  - Positioning
  - Electrical connection
  - Appliance cleaning, repair and extraordinary maintenance
  - Appliance disposal
  - Work on electrical equipment

A.4 Protection devices installed on the appliance

Guards

The appliance has:

- fixed guards (e.g. casings, covers, side panels, etc.), fixed to the appliance and/or frame with screws or quick-release connectors that can only be removed or opened with tools; therefore the user must not remove or tamper with such devices. The Manufacturer declines any liability for damage due to tampering or their non-use;
- interlocked movable guards (door) for access inside the appliance;
- appliance electrical equipment access panels or doors, made from hinged panels openable with tools. The panel or the door must not be opened when the appliance is connected to the power supply.

A.5 Safety signs to be placed on the appliance or near its area

Prohibition	Meaning
	do not remove the safety devices
	do not use water to extinguish fires (placed on electrical parts)
	Keep the area around the appliance clear and free from combustible materials. Do not keep flammable materials in the vicinity of the appliance

Danger	Meaning
	caution hot surface
	danger of electrocution (shown on electrical parts with indication of voltage)

A.6 Reasonably foreseeable improper use

Improper use is any use different from that specified in this manual. During appliance operation, other types of work or activities deemed improper and that in general can involve risks for the safety of operators and damage to the appliance are not allowed. Reasonably foreseeable improper use includes:

- lack of appliance maintenance, cleaning and periodical checks;
- structural changes or modifications to the operating logic;
- tampering with the guards or safety devices;
- failure to use personal protection equipment by operators, specialised personnel and maintenance personnel;
- failure to use suitable accessories (e.g. use of unsuitable equipment or ladders);
- keeping combustible or flammable materials, or in any case materials not compatible with or pertinent to the work, near the appliance;
- wrong appliance installation;
- placing in the appliance any objects or things not compatible with its use, or that can damage the appliance, cause injury or pollute the environment;
- climbing on the appliance;
- non-compliance with the requirements for correct appliance use;
- other actions that give rise to risks not eliminable by the Manufacturer.

A.7 Residual risks

The appliance has several risks that were not completely eliminated from a design standpoint or with the installation of adequate protection devices. Nevertheless, through this manual the Manufacturer has taken steps to inform operators of such risks, carefully indicating the personal protection equipment to be used by them. In order to reduce the risks, provide for sufficient spaces while installing the unit.

To preserve these conditions, the areas around the appliance must always be:

- kept free of obstacles (e.g. ladders, tools, containers, boxes, etc.);
- clean and dry;
- well lit.

For the Customer's complete information, the residual risks remaining on the appliance are indicated below: such actions are deemed improper and therefore strictly forbidden.

Residual risk	Description of hazardous situation
Slipping or falling	The operator can slip due to water, any liquid or dirt on the floor
Burns/abrasions (e.g. heating elements, cold pan, cooling circuit plates and pipes)	The operator deliberately or unintentionally touches some components inside the appliance without using protective gloves.

Residual risk	Description of hazardous situation
Electrocution	Contact with live parts during maintenance operations carried out with the electrical panel powered
Tipping of loads	When handling the appliance or the packing containing it, using unsuitable lifting systems or accessories or with the unbalanced load
Chemical	Contact with chemical substances (e.g. detergent, rinse aid, scale remover, etc.) without taking adequate safety precautions. Therefore always refer to the safety cards and labels on the products used.
Sudden closure	The operator for normal appliance use could suddenly and deliberately close the door/drawers (if present, depending on the appliance type).

A.8 Transport, handling and storage

- Transport (i.e. transfer of the appliance from one place to another) and handling (i.e. transfer inside workplaces) must occur with the use of special and adequate means.
- Please refer to indications on packaging for stackability during transport, handling and storage.
- Do not stand under suspended loads during loading or unloading operations. Unauthorized personnel must not enter the work area.
- The weight of the appliance alone is not sufficient to keep it steady.
- For appliance handling, do not lift and anchor it to movable or weak parts such as: casings, electrical raceways, pneumatic parts, etc.
- Do not push or pull the appliance to move it, as it may tip over. Use proper tool to lift the appliance.
- Arrange a suitable area with flat floor for appliance unloading and storage operations.
- Appliance transport, handling, shifting and storage personnel must be adequately instructed and trained regarding the safely use of lifting systems and personal protection equipment suitable for the type of operation carried out.
- When removing the anchoring systems, make sure the stability of the appliance parts does not depend on the anchoring and, therefore, that this operation does not cause the load to fall off the vehicle. Before unloading the appliance components, make sure all the anchoring systems are removed.

A.9 Installation and assembly

- The operations described must be carried out in compliance with the current safety regulations and provisions in force in the country of use.
- The plug, if present, must be accessible after positioning the appliance in the place of installation.
- The appliance is not suitable for installation outdoors and/or in places exposed to atmospheric agents (rain, direct sunlight, etc.).

A.10 Water connection

- **Water connection must be carried out in compliance with the regulations and provisions in force with the country.**
- The appliance must be supplied with drinking water at a pressure of 1,5 – 3 bar (150 – 300 kPa).
-

WARNING
The manufacturer declines any liability if the safety regulations are not respected.

A.11 Positioning

- Install the appliances, taking all the safety precautions required for this type of operation, also respecting the relevant fire-prevention measures.
- The installation diagram gives the appliance overall dimensions and the position of connections (gas, electricity, water). Check that they are available and ready for making all the necessary connections.
- Prevent the areas where the appliance is installed to be polluted with corrosive substances (chlorine, etc.). The manufacturer declines any liability for corrosive effects due to external causes.

A.12 Appliance space limitations

- Do not install the appliance on flammable walls. If an appliance is set up next to or against temperature-sensitive walls, maintain a distance of at least 50 mm between the appliance and any combustible walls or in any case an adequate space to enable subsequent servicing or maintenance operations.
- A suitable space must be left around the appliance (for operations, maintenance, etc.).
- This space must be increased in case of use and/or transfer of other equipment and/or means or if exit routes are necessary inside the workplace.

A.13 Appliance cleaning

- Do not touch the appliance with wet hands or feet or when barefoot.
- Put the appliance in safe conditions before starting any cleaning operation.
- Do not allow oil or grease to come into contact with plastic parts. Do not allow dirt, fat, food or other residuals to form deposits on the appliance.
- Respect the requirements for the various routine and extraordinary maintenance operations. Non-compliance with the instructions can create risks for personnel.
- Do not spray water or use water jets, steam cleaner or high pressure cleaner.

A.14 Preventive Maintenance

In order to ensure the safety and performance of your equipment, it is recommended that service is undertaken by Electrolux Professional authorised engineers every 12 months, in accordance with Electrolux Professional Service Manuals. Please contact your local Electrolux Professional Service Centre for further details.

A.15 Parts and accessories

Use only original accessories and/or spare parts. Failure to use original accessories and/or spare parts will invalidate the original manufacturer warranty and may render the appliance not compliant with the safety standard.

A.16 Precautions for use and maintenance

- Risks mainly of a mechanical, thermal and electrical nature exist in the appliance. Where possible the risks have been neutralised:
  - directly, by means of adequate design solutions.
  - indirectly by using guards, protection and safety devices.
- During maintenance several risks remain, as these could not be eliminated, and must be neutralised by adopting specific measures and precautions.

- Do not carry out any checking, cleaning, repair or maintenance operations on moving parts. Workers must be informed of this prohibition by means of clearly visible signs.
- Make sure to periodically check correct operation of all the safety devices and the insulation of electrical cables, which must be replaced if damaged.

In case of a significant anomaly (e.g. short circuits, wires coming out of the terminal block, motor breakdowns, worn electrical cable sheathing, etc.) the operator for normal appliance use must:

- immediately deactivate the appliance and disconnect all the supplies (electricity, gas, water).

Before carrying out any operation on the appliance, always consult the manual which gives the correct procedures and contains important information on safety.

A.17 Appliance maintenance

- The inspection and maintenance intervals depend on the actual appliance operating conditions and ambient conditions (presence of dust, damp, etc.), therefore precise time intervals cannot be given. In any case, careful and periodical appliance maintenance is advisable in order to minimise service interruptions.
- It is advisable to stipulate a preventive and scheduled maintenance contract with the Customer Care Service.
- Put the appliance in safe conditions before starting any maintenance operation.

A.18 Appliance disposal

- Make the appliance unusable by removing the power cable and any compartment closing devices, to prevent the possibility of someone becoming trapped inside.

B WARRANTY TERMS AND EXCLUSIONS

If the purchase of this product includes warranty coverage, warranty is provided in line with local regulations and subject to the product being installed and used for the purposes as designed, and as described within the appropriate equipment documentation.

Warranty will be applicable where the customer has used only genuine spare parts and has performed maintenance in accordance with Electrolux Professional user and maintenance documentation made available in paper or electronic format.

Electrolux Professional strongly recommends using Electrolux Professional approved cleaning, rinse and descaling agents to obtain optimal results and maintain product efficiency over time.

The Electrolux Professional warranty does not cover:

- service trips cost to deliver and pick up the product;
- installation;
- training on how to use/operate;
- replacement (and/or supply) of wear and tear parts unless resulting from defects in materials or workmanship reported within one (1) week from the failure;
- correction of external wiring;
- correction of unauthorized repairs as well as any damages, failures and inefficiencies caused by and/or resulting from;
  - insufficient and/or abnormal capacity of the electrical systems (current/voltage/frequency, including spikes and/or outages);
  - inadequate or interrupted water supply, steam, air, gas (including impurities and/or other that does not comply with the technical requirements for each appliance);
  - plumbing parts, components or consumable cleaning products that are not approved by the manufacturer;
  - customer's negligence, misuse, abuse and/or non-compliance with the use and care instructions detailed within the appropriate equipment documentation;
  - improper or poor: installation, repair, maintenance (including tampering, modifications and repairs carried out by third parties not authorized) and modification of safety systems;
  - Use of non-original components (e. g.: consumables, wear and tear, or spare parts);
  - environment conditions provoking thermal (e. g. overheating/freezing) or chemical (e. g. corrosion/oxidation) stress;
  - foreign objects placed in- or connected to- the product;
  - accidents or force majeure;
  - transportation and handling, including scratches, dents, chips, and/or other damage to the finish of the product, unless such damage results from defects in materials or workmanship and is reported within one (1) week of delivery unless otherwise agreed;
- product with original serial numbers that have been removed, altered or cannot be readily determined;
- replacement of light bulbs, filters or any consumable parts;
- any accessories and software not approved or specified by Electrolux Professional.

Electrolux Professional warranty will be void and manufacturer shall have no liability related thereto in case of any modification of the product or related hardware/software/programming.

Warranty does not include scheduled maintenance activities (including the parts required for it) or the supply of cleaning agents unless specifically covered within any local agreement, subject to local terms and conditions.

Check on Electrolux Professional website the list of authorized customer care.

C TECHNICAL DATA

C.1 Data plate position

The data plate is located in the lower right corner (see fig. below).

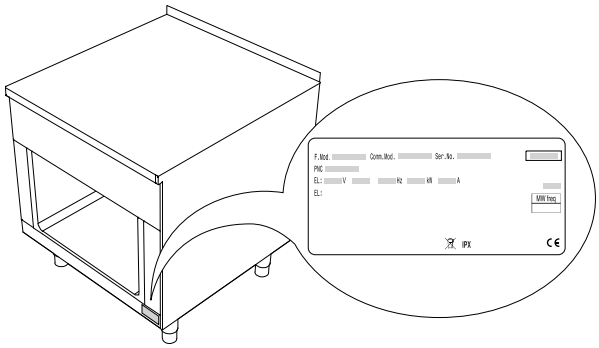

C.2 Appliance and manufacturer's identification data

The data plate gives the product identification and technical data.

An example of the marking or data plate on the appliance is given below:

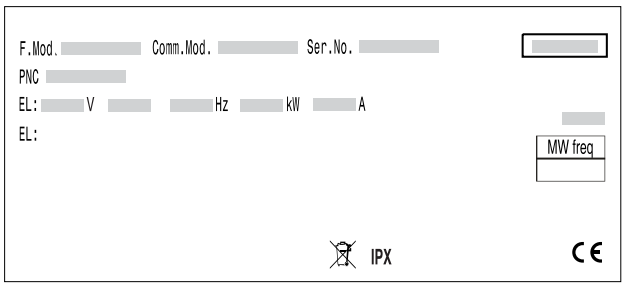

The meaning of the various information given on it is listed below:

F.Mod.	factory description of product
Comm.Mod.	commercial description
PNC	production number code
Ser.No.	serial number
Type ref.	certification group of the appliance
V	power supply voltage
Hz	power supply frequency
kW	power input
A	absorbed current
CE	CE marking
	WEEE symbol
IPX5	dust and water protection rating

C.3 How to interpret the factory description

The factory description on the data plate has the following meaning:

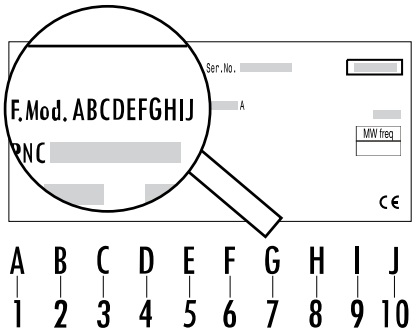

1 - Product line

M	Modular

2 - Family (depth)

A	800 mm
B	850 mm
C	900 mm

3 - Machine type

Z	Sink

4 - Size / Zones / Details

A	standard

5 - Module type (height)

G	700 mm, steel front panel
H	800 mm, steel front panel

6 - User operating

A	one side
B	one side with splashback

7 - Width

D	400 mm

8 - Base combination

3	closed base

9 - Power supply

O	no power supply

10 - Option

O	No options
M	Marine

D GENERAL INFORMATION

D.1 Introduction

This manual contains information relevant to various appliances. The product images in this guide are only an example.

The drawings and diagrams given in the manual are not in scale. They supplement the written information with an outline, but are not intended to be a detailed representation of the appliance supplied.

The numerical values given on the appliance installation diagrams refer to measurements in millimeters and/or inches.

D.2 Intended use and restrictions

This appliance is designed for cooking food. It is intended for collective use.

Any other use is deemed improper.

NOTE!
The manufacturer declines any liability for improper use of the product.

D.3 Testing and inspection

Our appliances have been designed and optimized, with laboratory testing, in order to obtain high performance and efficiency.

The appliance is shipped ready for use.

Passing of the tests (visual inspection - gas/electrical test - functional test) is guaranteed and certified by the specific enclosures.

To ensure protection class compliance, all seals must remain in perfect condition and all components must be properly assembled after installation, repairs and maintenance work.

D.4 Copyright

This manual is intended solely for consultation by the operator and can only be given to third parties with the permission of Electrolux Professional.

D.5 Keeping the manual

The manual must be carefully kept for the entire life of the appliance, until scrapping. The manual must stay with the appliance in case of transfer, sale, hire, granting of use or leasing.

D.6 Recipients of the manual

This manual is intended for:

- the carrier and handling personnel;
- installation and commissioning personnel;
- the employer of appliance users and the workplace manager;
- operators for normal appliance use;
- specialised personnel - Customer Care service (see service manual).

D.7 Definitions

Listed below are the definitions of the main terms used in the manual. It is advisable to read them carefully before use.

Operator	appliance installation, adjustment, use, maintenance, cleaning, repair and transport personnel.
Manufacturer	Electrolux Professional or any other service centre authorised by Electrolux Professional.
Operator for normal appliance use	an operator who has been informed and trained regarding the tasks and hazards involved in normal appliance use.
Customer Care service or specialised personnel	an operator instructed/trained by the Manufacturer and who, based on his professional and specific training, experience and knowledge of the accident-prevention regulations, is able to appraise the operations to be carried out on the appliance and recognise and prevent any risks. His professionalism covers the mechanical, electrotechnical and electronics fields etc.
Danger	source of possible injury or harm to health.
Hazardous situation	any situation where an operator is exposed to one or more hazards.
Risk	a combination of probabilities and risks of injury or harm to health in a hazardous situation.
Protection devices	safety measures consisting of the use of specific technical means (guards and safety devices) for protecting operators against risks.
Guard	an element of a appliance used in a specific way to provide protection by means of a physical barrier.
Safety device	a device (other than a guard) that eliminates or reduces the risk; it can be used alone or in combination with a guard.
Customer	the person who purchased the appliance and/or who manages and uses it (e. g. company, entrepreneur, firm).
Electrocution	an accidental discharge of electric current on a human body.

D.8 Responsibility

The Manufacturer declines any liability for damage and malfunctioning caused by:

- non-compliance with the instructions contained in this manual;
- repairs not carried out in a workmanlike fashion, and replacements with parts different from those specified in the spare parts catalogue (the fitting and use of non-original spare parts and accessories can negatively affect appliance operation and invalidates the original manufacturer warranty);
- operations carried out by non-specialised personnel;
- unauthorized modifications or operations;
- missing, lack or inadequate maintenance;
- improper appliance use;
- unforeseeable extraordinary events;
- use of the appliance by uninformed and / or untrained personnel;
- non-application of the current provisions in the country of use, concerning safety, hygiene and health in the workplace.

The Manufacturer declines any liability for:

- damage caused by arbitrary modifications and conversions carried out by the user or the Customer;
- inaccuracies contained in the manual, if due to printing or translation errors.

The employer, workplace manager or service technician are responsible for identifying and choosing adequate and suitable personal protection equipment to be worn by operators, in compliance with regulations in force in the country of use.

Any supplements to the installation, use and maintenance manual the Customer receives from the Manufacturer will form an integral part of the manual and therefore must be kept together with it.

D.9 Customer packaging checks

- The forwarder is responsible for the goods during transport and delivery.
- Make a complaint to the forwarder in case of visible or hidden damage.
- Specify any damage or shortages on the dispatch note.
- The driver must sign the dispatch note: the forwarder can reject the claim if the dispatch note is not signed (the forwarder can provide the necessary form).
- For hidden damage or shortages becoming apparent only after unpacking, request the forwarder for inspection of the goods within and no later than 15 days after delivery.

After packaging checks

1. Remove the packaging.
   Take care when unpacking and handling of the appliance to not cause any shocks on itself.
2. Keep all the documentation contained in the packaging.

D.10 Storage

The appliance and/or its parts must be stored and protected from damp, in a non-aggressive place, free of vibrations and with room temperatures between 5°C and 50°C.

The place where the appliance is stored must:

- can take the appliance load,
- have a flat support surface to avoid deforming the appliance or damage to the support feet.

E INSTALLATION DIAGRAMS

E.1 Installation type

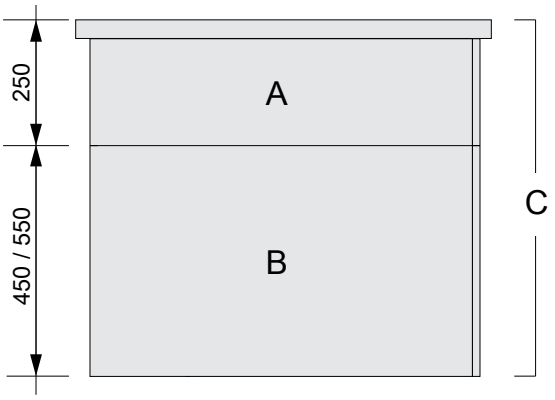

When describing our appliances, we distinguish between top modules **A**, base modules **B** and factory-assembled units **C**. Top and base modules can be set up together or as individual units.

The appliance must always be installed in its intended location according to the relevant installation and connection diagrams (E *Installation diagrams*).

The appliance should be connected to fixed cables.

Installation options:

1. **Standing against the wall**
   - on adjustable feet
   - on steel bases
   - on concrete plinth
2. **Free standing**
   - on adjustable feet
   - on steel bases
   - on concrete plinth
3. **Wall mounted**
   (not available for all appliances)

The appliances are suitable for setting up as single appliances or as a group of appliances.

They can be positioned freely in the space provided, side by side, against a wall or back-to-back. When installing side by side, appliances are connected to a rail.

Different wall frames are used when setting up against a wall.

NOTE!
When installing the appliance on a steel or concrete plinth, the bottom plate must not be mounted.

E.2 Dimension drawings for floor installations

CAUTION
When installing with concrete plinth, the wall niche must be at least 70 mm deep but must not exceed 100 mm to ensure the appliance has a solid base and sufficient ventilation inside it.

Floor installation options:

1. On steel plinth or adjustable feet

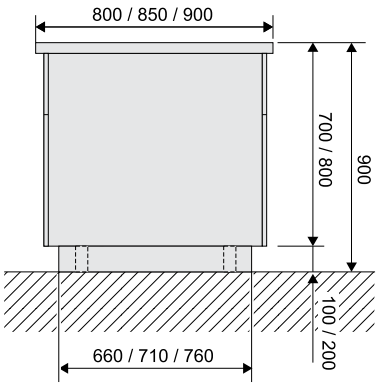

2. On concrete plinth

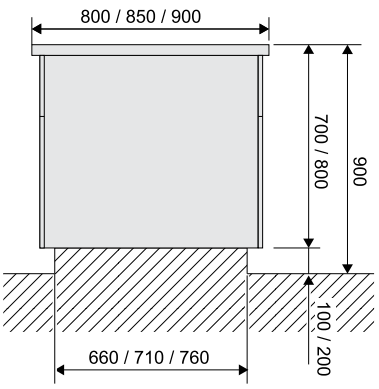

3. Against the wall on steel plinth or adjustable feet

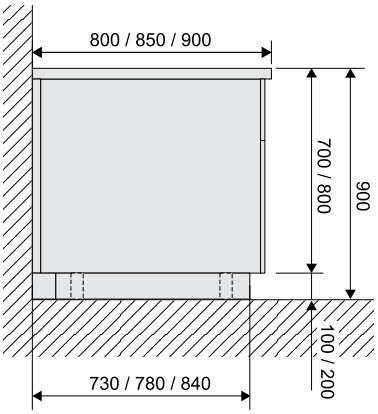

4. Against the wall on concrete plinth

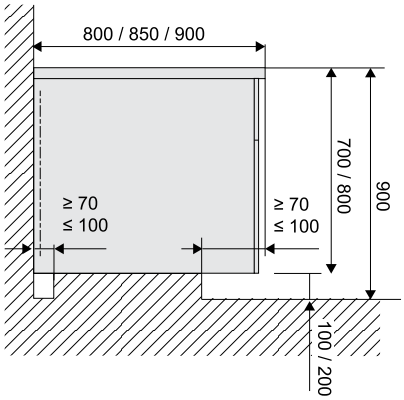

5. Back to back

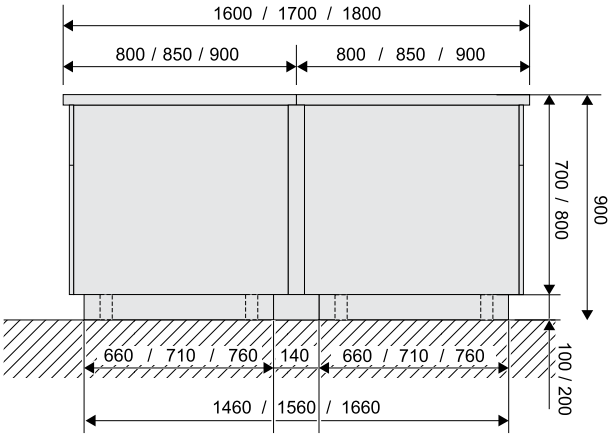

NOTE!
Please note that not all models are available in the depths shown on the diagram.

E.3 Installation and connection diagram

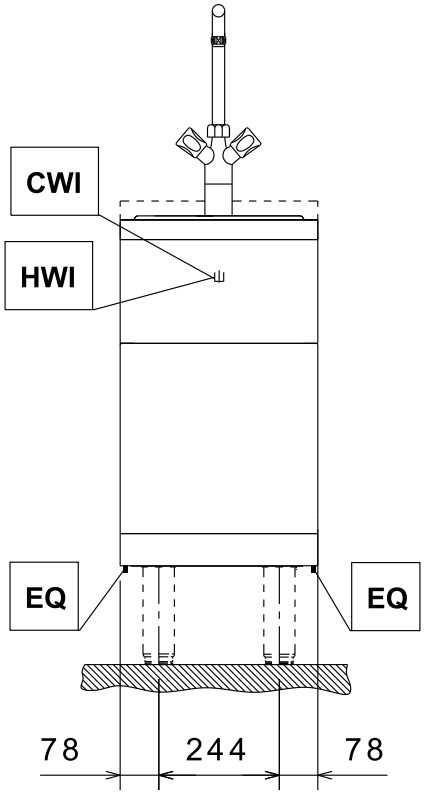

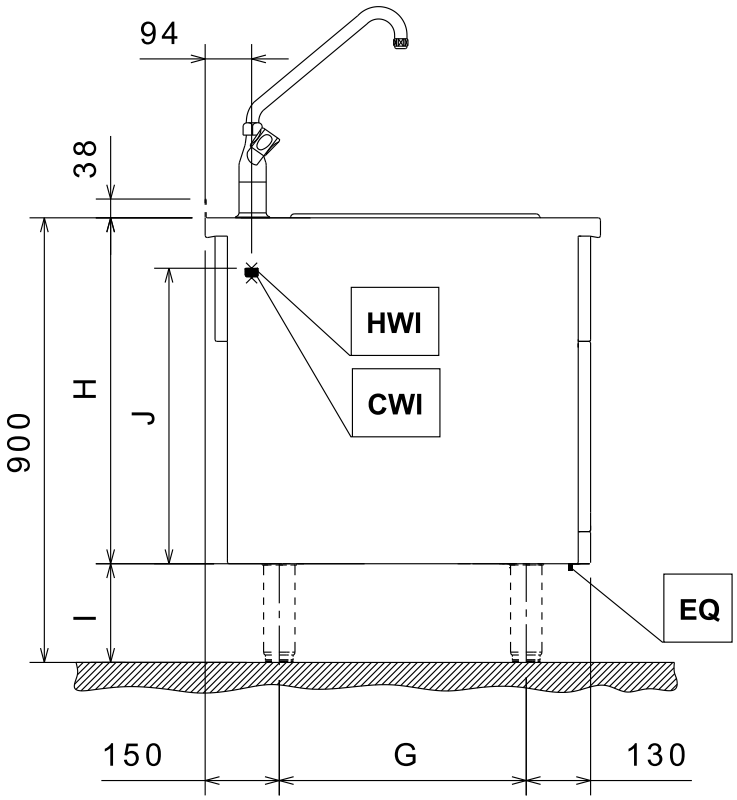

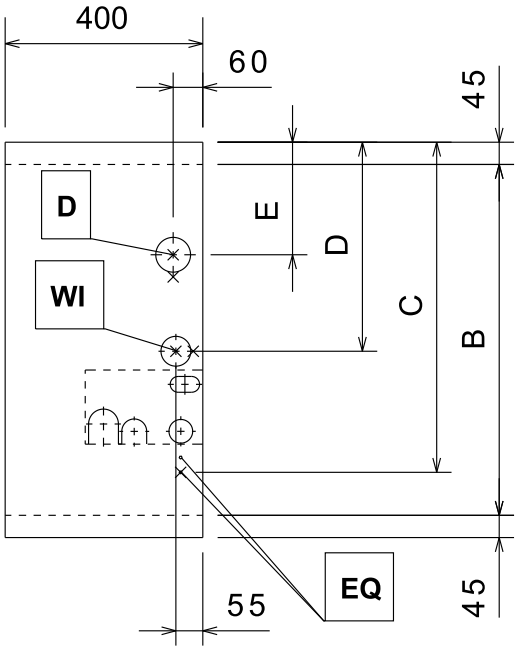

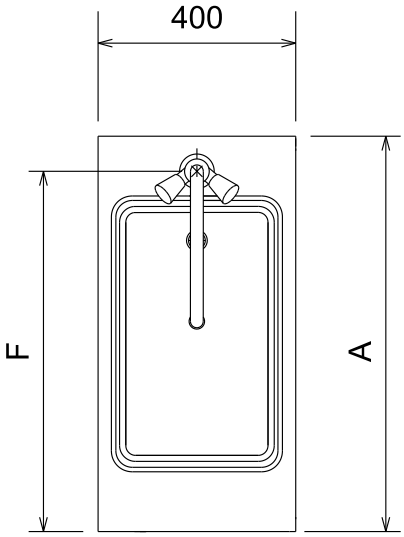

EQ = Potential equalisation
WI = Water inlet
CWI = Cold water connection
HWI = Hot water connection
D = Drain

A	B	C	D	E	F	G
800	710	668	438	228	726	500
850	760	718	488	278	751	550
900	810	768	538	328	776	600

H	I	J
700	200	589
800	100	698

Marine version

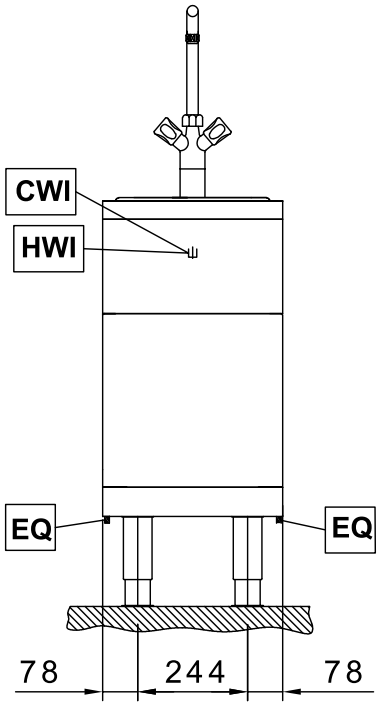

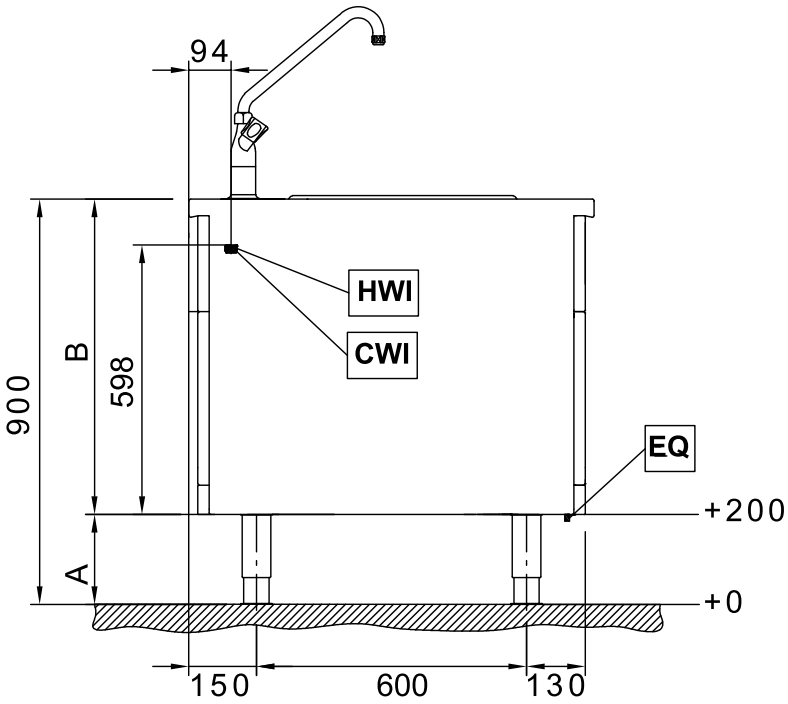

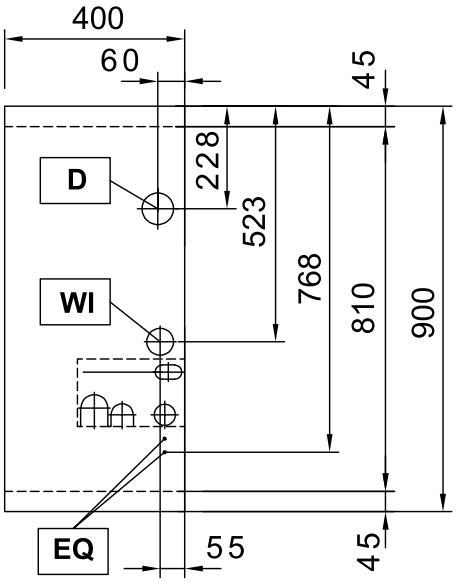

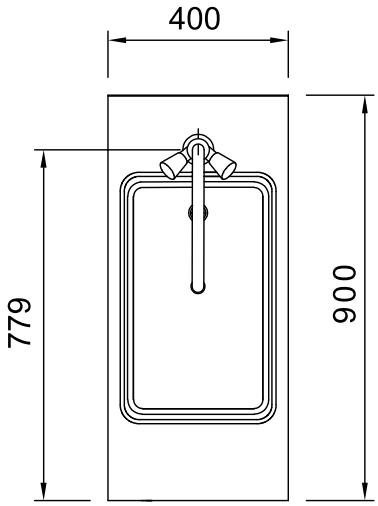

EQ = Potential equalisation
WI = Water inlet
CWI = Cold water connection
HWI = Hot water connection
D = Drain

A	B
200	700
100	800

E.4 Accessing the appliance's internal components

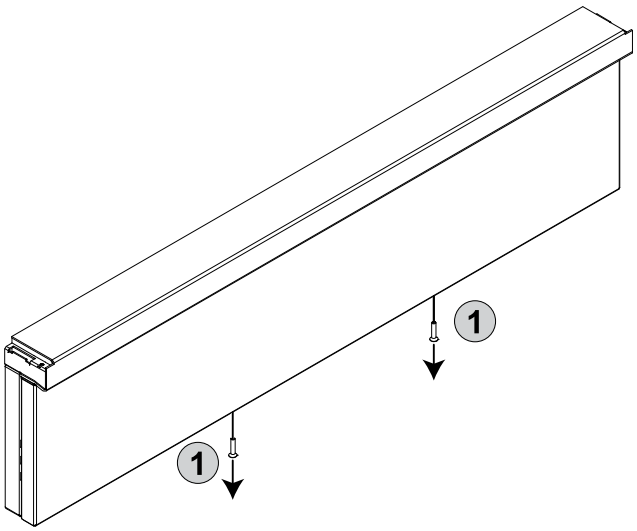

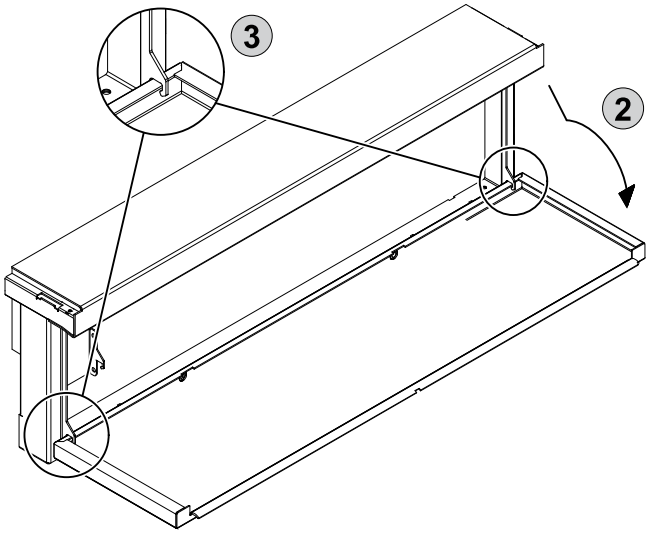

F INSTALLATION AND ASSEMBLY

F.1 Introduction

WARNING

Refer to "*WARNING and Safety Information*".

To ensure correct operation of the appliance and maintain safe conditions during use, carefully follow the instructions given in this chapter.

Check and, if necessary, level the appliance after positioning. Incorrect levelling can cause appliance malfunctioning.

F.2 Before installation

Depending on your model, prepare the following before the appliance is installed and positioned correctly:

- Fastening elements, i.e. drill holes and insert dowels. You can find accompanying notes in the relevant sections on F.7 *Wall installation*.
- Prepare water, gas and electrical connections and install a shut-off valve, if necessary.

F.3 Installing on concrete plinth

Packaging should only be removed immediately before the unit is installed.

Keep the unit on the transport pallet until it is at its final location.

1. Transport the appliance on its transport pallet directly in front of the point of installation.

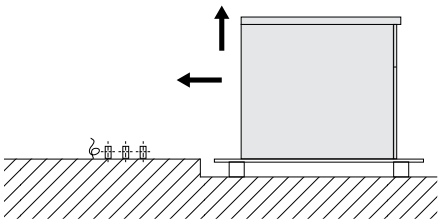

2. Remove the pre-cut plate at the bottom of the appliance. (for access, see E.3 *Installation and connection diagram*).
3. Lift the unit on one side so that all installation connections are inside the appliance.

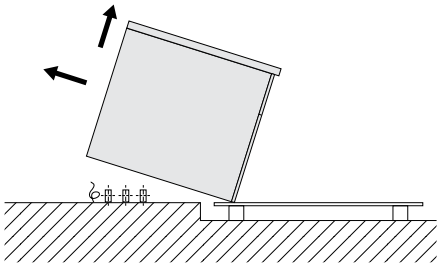

4. Carefully lower the appliance and then move it into the correct position. Finally, remove the transport palette.

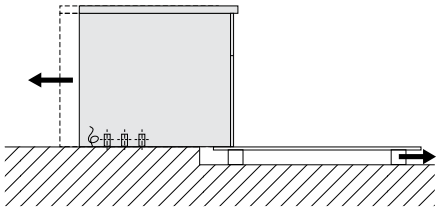

5. Remove the outer protective film and the edge covers, taking care not to scratch the surface of the appliance.

   Very slowly pull off the protective film on the stainless steel surfaces, without ripping, to prevent any adhesive residue.

   Remove any adhesive residue with a non-corrosive solvent. Then rinse and dry the spot thoroughly.

F.4 Installing on steel plinth or adjustable feet

NOTE!
If installing on a steel plinth or adjustable feet, always make sure these are attached to the appliance beforehand. There are no tools for taking the unit down from the transport pallet and putting it in place; all you need is manpower, with two to four men required depending on the size of the unit.

1. Transport the appliance on its transport pallet directly in front of the point of installation.
   The installation connections that are sticking out of the floor should be as close as possible to the side of the transport pallet.

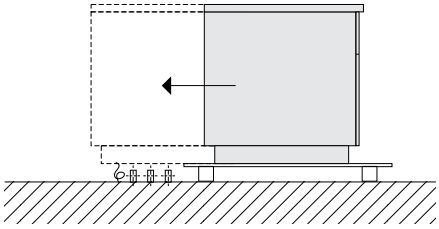

2. Remove the pre-cut plate at the bottom of the appliance. (for access, see E.3 *Installation and connection diagram*).
3. Shift the appliance onto the transport pallet such that all of the installation connections lie within the appliance.

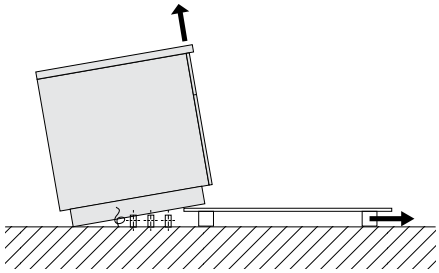

4. Tip the appliance until it is standing on the floor. Then lift at the front and remove the transport pallet.
5. Carefully lower the appliance and then move it into the correct position.

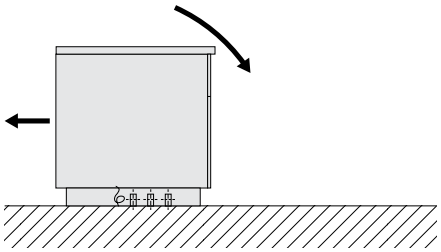

6. Remove the outer protective film and the edge covers, taking care not to scratch the surface of the appliance.
   Very slowly pull off the protective film on the stainless steel surfaces, without ripping, to prevent any adhesive residue.
   Remove any adhesive residue with a non-corrosive solvent. Then rinse and dry the spot thoroughly.

F.5 Disposal of packing

The packing must be disposed of in compliance with the current regulations in the country where the appliance is used. All the packing materials are environmentally friendly.

They can be safely kept, recycled, or burned in an appropriate waste incineration plant. Recyclable plastic parts are marked as follows:

PE	**Polyethylene** • Outer wrapping • Instructions bag
PP	**Polypropylene** • Straps • Top packaging panels
PS	**Polystyrene foam** • Corner protectors

The parts in wood and cardboard can be disposed of, respecting the current regulations in the country where the appliance is used.

F.6 Securing or adjusting to the floor (optional)

If you need to secure it to the floor, the appliance comes with compatible adjustable feet.

We recommend you adjust the feet so you end up with a working height of 900 mm. Level the unit with a spirit level.

A. **Attaching the unit with screws**
   The feet have metal plates which may be secured to the floor using screws .

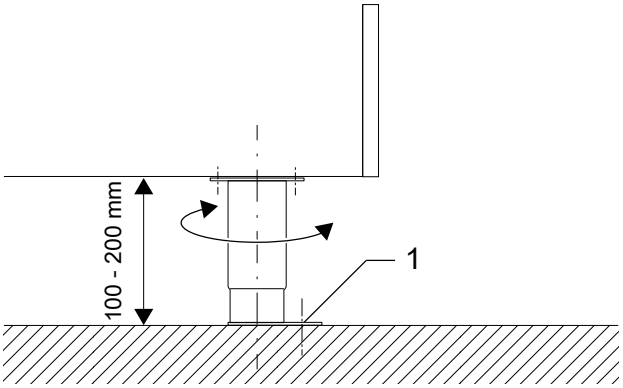

B. **Attaching the unit by welding**
   The metal plate underneath the feet must be welded to the floor with a continuous weld around the outer edge.

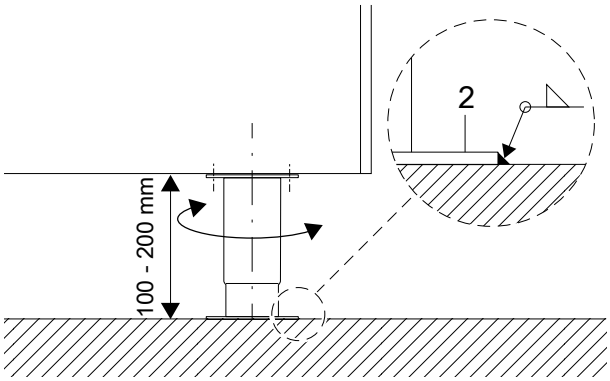

F.7 Wall installation

F.7.1 Preparing the brackets

Before you start, prepare the mounting holes in the wall according to the specifications in the mounting diagram.

1. Use the supplied wall anchors **1** with the threaded rods **2**. The holes must have a diameter of 18 mm [0,71″] and a minimum depth of 145 mm [5,71″].
2. Clean the hole after drilling.
3. Mount the supporting profile **3** with the nuts **4** and the spring washers **5**.
4. Adjust the supporting profile **3** in height and alignment using a spirit level.

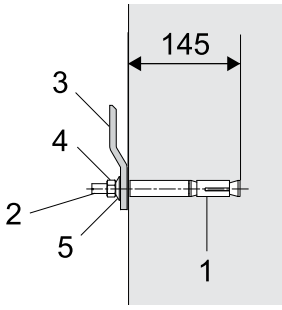

F.7.2 Positioning

We recommend using a lift truck with a stable shelf to take the unit down from the transport pallet and position it into place.

Lifting the unit onto the hand truck has to be done by hand, with two or more men required depending on the unit size.

1. Transport the appliance on its transport pallet directly in front of the point of installation.
   Bring the lifting cart as close as possible to the appliance.
2. Carefully lift the unit on shelf **A** of the truck.

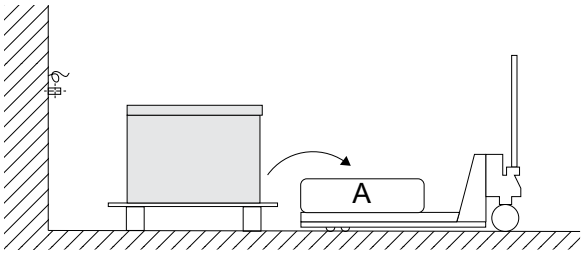

3. Remove the transport pallet.

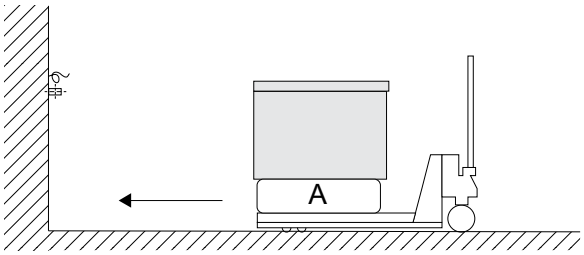

4. Carry the appliance on the lifting cart to the prepared position on the wall and lift it to the correct height.

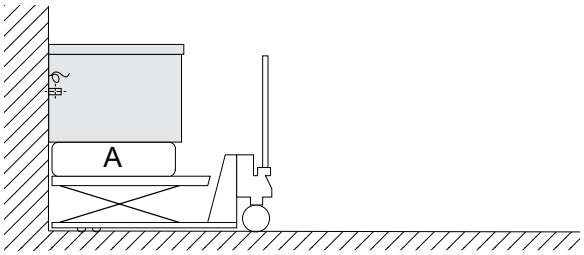

5. Remove the outer protective film and the edge covers, taking care not to scratch the surface of the appliance.
   Very slowly pull off the protective film on the stainless steel surfaces, without ripping, to prevent any adhesive residue.
   Remove any adhesive residue with a non-corrosive solvent.
   Then rinse and dry the spot thoroughly.

F.7.3 Securing and set up

Lift the unit on the prepared support profile and level it using a spirit level. Check the height in relation to other devices.

Use the adjusting screws **6** to adjust the device vertically.

Finally, tighten wall anchor nuts **4** to a torque of 80 Nm.

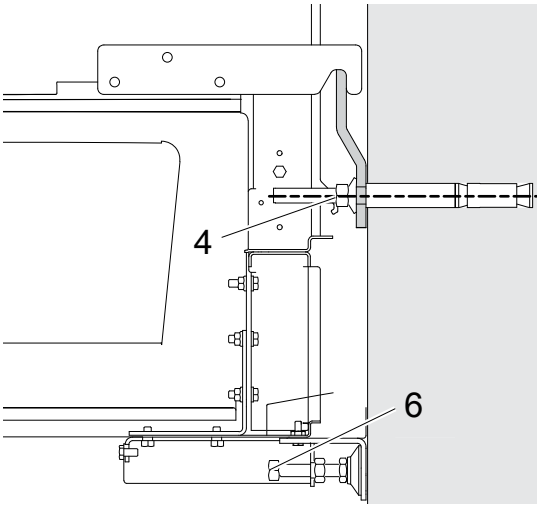

F.8 Fastening multiple appliances together

1. Remove lower panel **A** by undoing the screws.

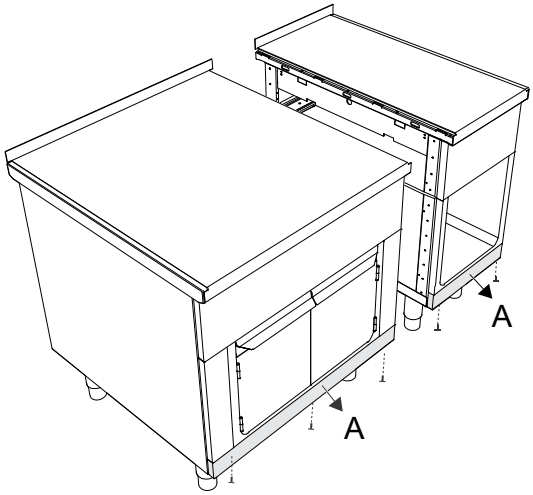

2. Push the units together. Use the adjusting screws on the feet to bring the appliances to the same height, then level them.
   Screw the appliances together at the base using the screw, washer and nut **B**. Replace panel **A** using the screws.

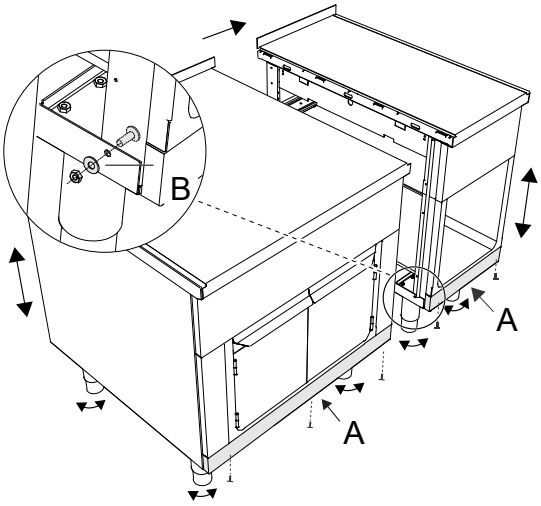

3. Using a solid tool, break nuts **C** from connecting rail **D**. Insert connecting rail **D** into the gap between the top, making sure marking **E** is pointing forwards.
   Connect the appliances by hammering nuts **C** into the dedicated cut out.

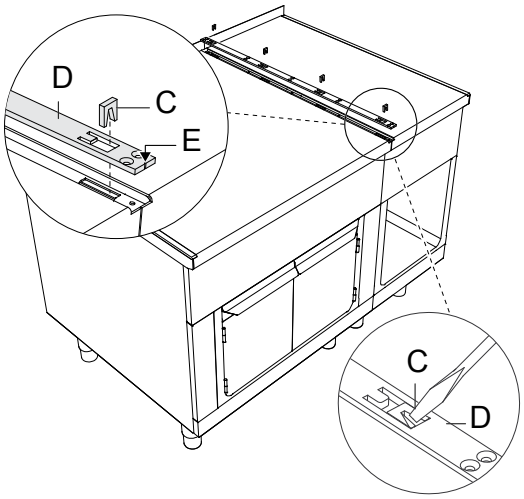

4. Seal the whole length of the joint with long lasting silicone (we recommend grey junction sealing, code: 059611). Attach the rail **D** using the supplied screws **F**.
   Insert the hook on the underside of cover **G** into the eyelets in the connecting rail and slide cover **G** backwards until it aligns to the front.

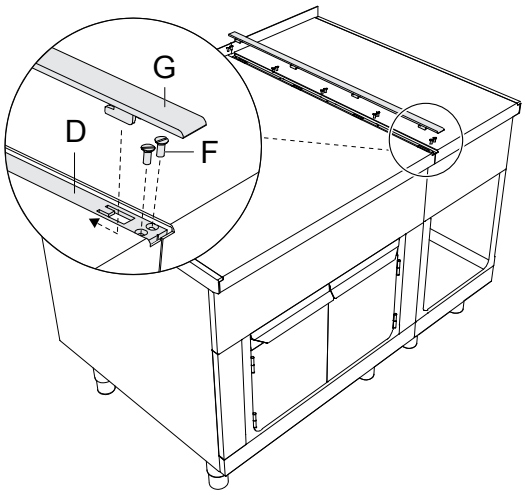

F.9 Side panels and base models

All side panels are available in two different versions:

- **Side panel with an overhang of 12,5 mm** for individual mounting on walls.
- **Side cover without overhang** to mount on covered sides.

Mount the faceplates onto the unit cladding when setting up. The faceplates suitable for your type of installation are available as optional accessories.

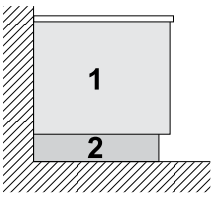

1. Side panels for wall installation: height 400/700/800 mm
2. Base panel or stainless steel base for wall mounting: height 100/200 mm

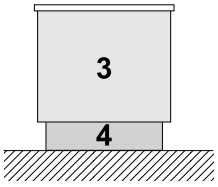

3. Side panels for free-standing appliances: height 700/800 mm
4. Base panel or stainless steel base for free-standing appliances: height 100/200 mm

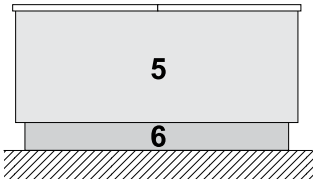

5. Side panels for back-to-back setup height 700/800 mm
6. Base panel or stainless steel base for mounting back-to-back: height 100/200 mm

F.10 Fixing the side panels with a 12,5 mm overhang

1. Attach connecting rails **B** and **C** with the supplied screws **A**. Make sure marking on part **B** on the rail is pointing forwards.

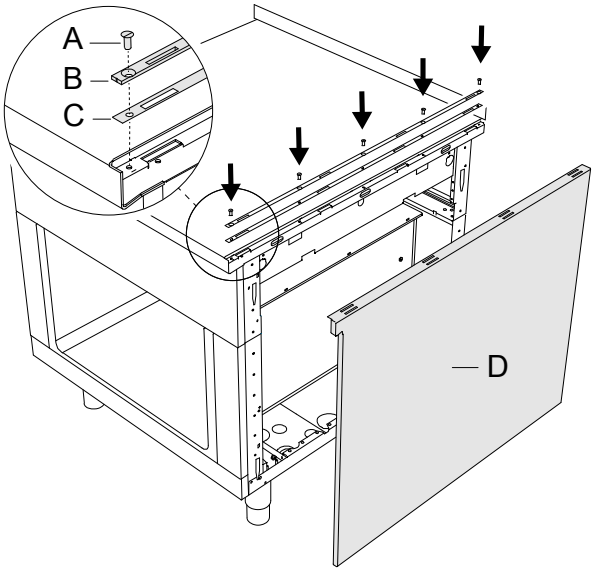

2. Bring the side panel **D** into position.
   Put the 5 hooks of the panel **F** into the slots **E**.

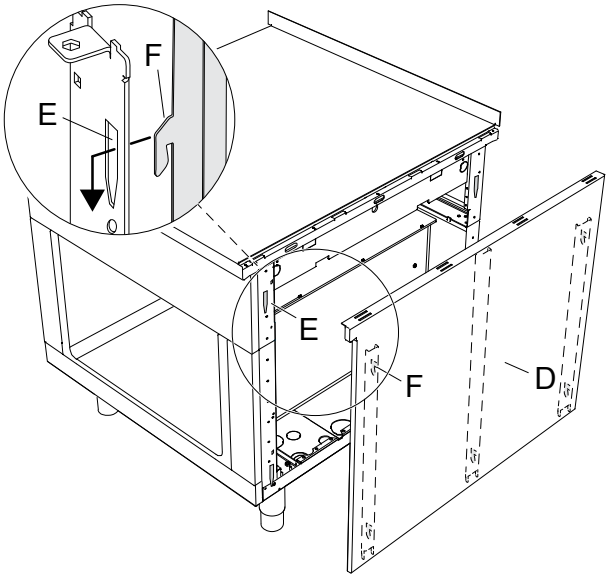

3. Insert the hooks on the bottom of end rail **G** into the eyelets of the connecting rail.

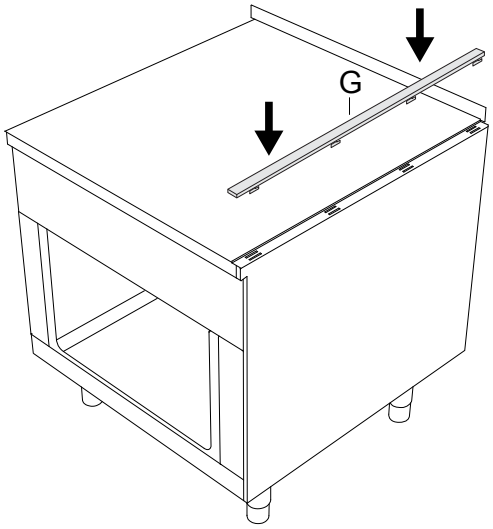

4. Slide end rail **G** in the direction of the arrow to align it to the front.

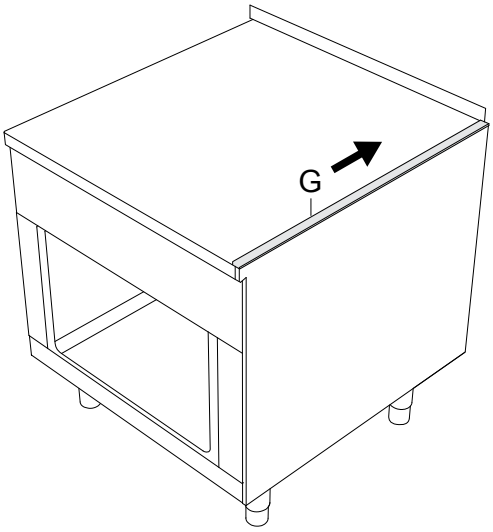

F.11 Fixing the side cover without overhang

The side cover should only be used as a closing off against the wall, against a niche and in between appliances (provided that these have the same dimensions). Standard cover has pre-cuts that you can adapt to the appliances according to the left/right side.

1. Fit the 4 cage nuts **A** into the dedicated slots on the frame.

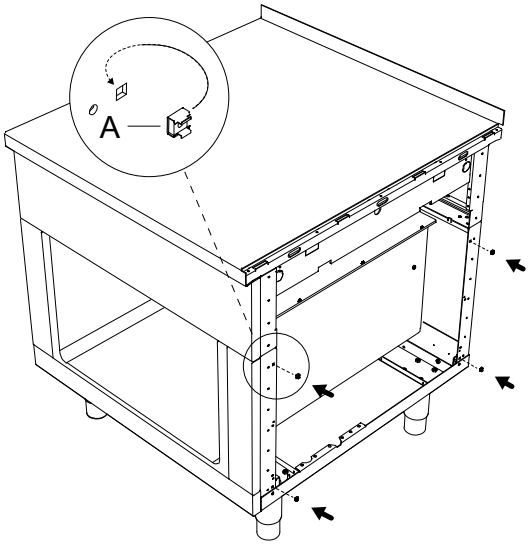

2. Attach connecting rails **C** and **D** with the supplied screws **B**.
   Make sure marking on part **C** on the rail is pointing forwards.
   Bring the side panel **E** into position.

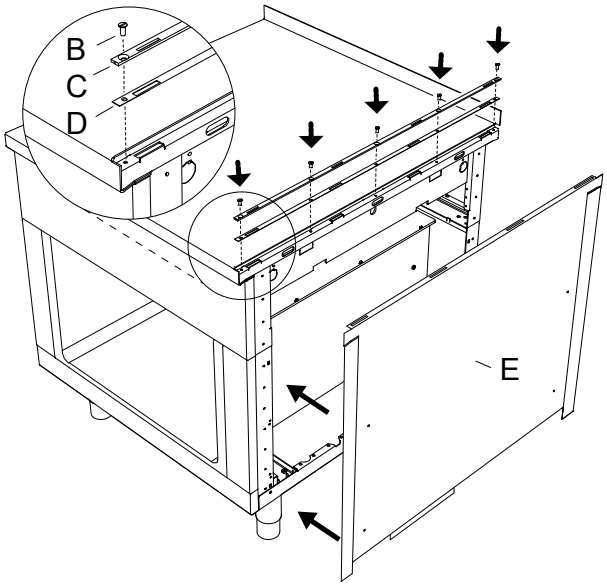

3. Insert the hooks on the bottom of end rail **F** into the eyelets of the connecting rail.
   Attach the side of side cover **E** using the 4 flathead screws supplied.

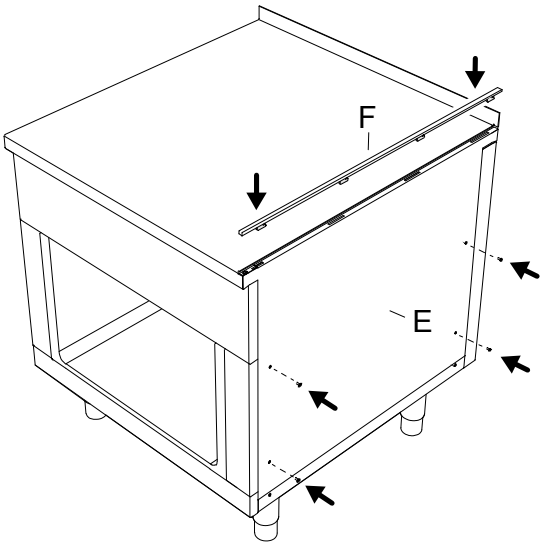

4. Slide end rail **F** in the direction of the arrow to align it to the front.

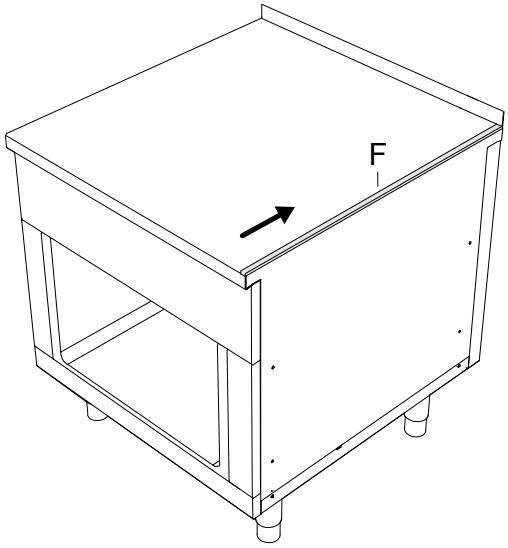

F.12 Sealing

For hygiene reasons, to prevent water and other substances from running under the appliance, seal all around the joints between the appliance and the wall or floor with permanently elastic silicone.

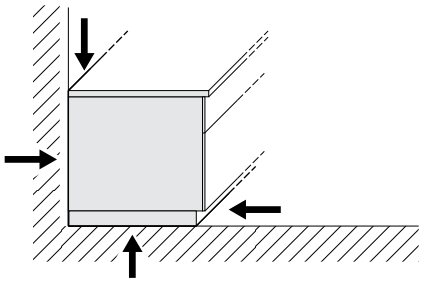

F.13 Handrail (optional)

For correct assembly/disassembly of the handrail, refer to the dedicated installation instructions.

CAUTION
If the handrail is present, do not place on it more than 25 kg per meter of structure.

G CONNECTING THE WATER SUPPLY

G.1 Water connection

IMPORTANT
- Carry out the water connection by referring to paragraph A.10 *Water connection*.
- If the water pressure is higher than that specified, use a pressure reducer to avoid damaging the appliance.

For correct installation, the water inlet pipe must be connected to the mains using a mechanical filter and a shutoff valve.

Before connecting the filter, allow a certain amount of water to run in order to clear the pipe of any waste matter.

Connect the appliance with water that has:
- chloride concentration less than 20 ppm. A higher concentration of chlorides can induce localized oxidation phenomena (not covered by warranty);
- hardness between 5 and 25 °fH. Hardness below 5 °fH makes the water undrinkable and hardness above 25 °fH generates limescale deposits that require frequent descaling cycles.

In case the water quality is out of the value ranges reported above, it is advisable to install some water treatment systems.

G.2 Drinking water supply

The appliance should be connected to fixed lines. Metal installation pipes may not protrude more than 100 mm from the floor.

IMPORTANT
- Gain always access to the pipes in accordance with E *Installation diagrams*.
- Connect the flexible hoses with a G 1/2" female thread with a shut-off valve installed, to the on site water pipes protruding from the floor.

G.3 Backflow protection

A backflow protection device is required to protect each incoming water connection.

IMPORTANT
Install a single check valve, supplied with the appliance, on the water connection pipe.

H NORMAL APPLIANCE USE

H.1 Characteristics of personnel enabled to operate on the appliance

The Customer must make sure the personnel for normal appliance use are adequately trained and skilled in their duties.

The operator must:
- read and understand the manual;
- receive adequate training and instruction for their duties in order to operate safely;
- receive specific training for correct appliance use.

IMPORTANT
The Customer must make sure his personnel have understood the instructions received and in particular those regarding work hygiene and safety in use of the appliance.

H.2 Basic requirements for appliance use

- Knowledge of the technology and specific experience in operating the appliance.
- Adequate general basic education and technical knowledge for reading and understanding the contents of the manual, including correct interpretation of the drawings, signs and pictograms.
- Sufficient technical knowledge for safely performing his duties as specified in the manual.
- Knowledge of the regulations on work hygiene and safety.

I APPLIANCE CLEANING AND MAINTENANCE

WARNING
Refer to "*WARNING and Safety Information*".

I.1 Care information

Care operations have to be carried out by the owner and/or user of the appliance.

IMPORTANT
Problems resulting from poor or lack of care as hereinafter described will not be covered by the warranty.

I.2 Cleaning introduction

To help reduce environmental impact, we recommend using Electrolux Professional cleaning products designed with sustainability and biodegradability in mind.

If another type of detergent is used, carefully follow the producer's instructions and observe the safety rules given in the information sheets provided with the product or substance.

CAUTION

- Do not use solvent-based detergents (e. g. trichloro-ethylene) or abrasive powders for cleaning.
- Do not use steel brushes, steel wool, copper cloths, sand-based or similar products for cleaning.
- Only start cleaning once the appliance has cooled.
- Do not clean the appliance with flammable liquids.

Accessories such as baskets and containers, if present, must be cleaned outside of the appliance.

WARNING
When using chemicals, comply with the safety notes and dosage recommendations printed on the packaging. Refer to the chapter A.2 *Personal protection equipment* for handling chemical products.

I.3 Stainless steel surfaces

The reason stainless steel can resist corrosion and rust is its passive layer which builds up when oxygen hits the metal surface. There is sufficient oxygen in the air to do this.

If this passive layer is physically broken or damaged by chemical substances, leaving it unable to regenerate itself, even rust-free stainless steel can be subject to corrosion.

It is possible to develop or regenerate the passive layer by treating it with running, oxygen-rich water.

Oxygen-starving abrasives such as hydrochloric acid, chlorides and spice concentrates, mustard, vinegar essences, spice cubes and cooking salt solutions can lead to chemical damage or rupture of the passive layer, depending on the concentration and temperature.

Extraneous rust (iron particles), the formation of galvanic elements and lack of oxygen could cause more damage.

IMPORTANT
Keep stainless steel surfaces clean at all times and make sure they are well ventilated.

Please follow these instructions:

- Remove grime, fat and other cooking residuals from steel surfaces when cool using soapy water, with or without detergent, and a cloth or sponge.
  Dry the surfaces thoroughly after cleaning.
- In case of encrusted grime, fat or food residuals, go over with a cloth or sponge, wipe in the direction of the satin finish and rinse often.
  Rubbing in a circular motion combined with the particles of dirt on the cloth/sponge could spoil the steel's satin finish.
- Metal objects can spoil or damage the steel: damaged surfaces become dirty more easily and are more subject to corrosion.
- Restore the satin finish if necessary.
- Do not let stainless steel parts come into prolonged contact with acids, spices, salts, etc. Even acid fumes which build up from cleaning tiled surfaces can promote corrosion.
  Rinse off work surfaces with fresh water. This applies especially after cooking potatoes, pasta or rice in salted water.

I.4 Colored surfaces

- Clean all colored surfaces on a daily basis.
- Use soapy water and a cloth to remove food particles and grease
- Metal objects can spoil or damage the surface: damaged surfaces become dirty more easily and are more subject to corrosion.
- Do not let colored surfaces come into prolonged contact with acids, spices, salts, etc. Even acid fumes which build up from cleaning tiled surfaces can promote corrosion.

I.5 Descaling

WARNING
Refer to "*Personal protection equipment*".

IMPORTANT
Remove limescale, fat, starch and protein layers with regular cleaning to avoid corrosion.

- Use a solution of 10% vinegar, 10% phosphoric acid or a suitable de-scaling solution available for purchase.
- Never use steel wool or other abrasive materials which can scratch the surface of the stainless steel.

I.6 Periods of non-use

If the appliance is not going to be used for some time, take the following precautions:

- close the water supply tap(s), if present;
- disconnect the power supply or remove the plug from the power socket, if present;
- carefully clean the internal parts of the appliance;
- clean the cabinet, going over all the stainless steel surfaces vigorously with a rag moistened with paraffin oil to create a protective film;
- leave the door or drawers, if present, open so that air can circulate inside, preventing the formation of unpleasant odours;
- never store the appliance where the temperature can drop below 0°C [32°F];
- periodically air the premises.

I.7 Informations for maintenance

Preventive Maintenance reduces downtime and maximizes machines efficiency.

Customer Care Service can provide advice on the best maintenance plan to be purchased based on the intensity of use and the age of the equipment.

During service, repair and maintenance work, distractions and stress factors must be avoided.

As such, unauthorised persons must be kept away from the appliance.

IMPORTANT

- Repairs and service on the appliances must be carried out when heating elements have cooled down.
- After completion of the maintenance and repair work, the service technician must carry out checks to ensure all operating modes of all functional and safety components are in accordance with the operating instructions.

I.8 Maintenance intervals

It is advisable to carry out the checks with the frequency given in the following table:

Maintenance, inspections, checks and cleaning	Frequency	Responsability
Ordinary cleaning • general cleaning of appliance and surrounding area	• Daily	• Operator
Mechanical parts • check the mechanical parts, for cracks or deformations, tightening of screws: check the readability and condition of words, stickers and symbols and restore if necessary • if present, check hydraulic system condition, e. g. leakages	• Yearly	• Service
Electrical components • check the electrical components inside the appliance • check wirings and connections	• Yearly	• Service
General appliance overhaul • check all components, electrical equipment, corrosion, pipes…	Every 10 years[1]	• Service
Appliance internal cleaning • remove any deposits of dirt inside the appliance.	• Yearly	• Service

1. The appliance is designed and built for a duration of about 10 years. After this period of time (from commissioning) the appliance must undergo a general inspection and overhaul.

J TROUBLESHOOTING

J.1 Introduction

Certain faults may occur during normal use of the appliance. In some cases, faults can be eliminated easily and quickly by following the indication below.

The display, if present, could show a warning message indicating a fault in progress.

If the fault persists, contact the Customer Care Service:

1. Disconnect the appliance from the main power supply;
2. Switch off the safety circuit breaker ahead of the appliance;
3. Close the gas and water tap(s), if they are present;
4. Remember to specify:
   - the type of fault
   - the appliance PNC (product number code)
   - the Ser. No. (appliance serial number).

IMPORTANT

The appliance PNC and serial number are essential for identifying the type of appliance and date of manufacture.

J.2 Troubleshooting

Anomaly	Possible causes	Actions
Water supply		
No water is coming into the tank	• The local water tap is off • The tank's water tap is blocked	• Open the water tap • Clean the outlet tap

K APPLIANCE DISPOSAL

WARNING
Refer to "*WARNING and Safety Information*".

K.1 Procedure regarding appliance disposal

K.1.1 Recyclability

Our appliances are manufactured using a significant percentage of recyclable metals (such as stainless steel, iron, aluminium, galvanized sheet, copper, etc.), which can be recovered through the local recycling systems, in compliance with the regulations in force in the country of use.

National regulations regarding waste disposal may vary. Disposal of the appliance must therefore be carried out in accordance with the applicable legislation and the directives issued by the competent authorities in the country where the appliance is decommissioned.

The components of the appliance must be separated and disposed of in accordance with their material composition (e.g. metals, oils, greases, plastics, rubber, refrigerant gases, insulating boards and other insulating material, glass wool, LEDs, etc.) and in full compliance with applicable local and international waste management regulations.

K.1.2 Procedure regarding appliance disposal and component / material recovery

This product should not simply be disposed of in the environment at the end of its life cycle; it is imperative instead either to dispose of it in accordance with local environmental regulations, or, preferably, to deliver it whole to an authorized recycling center.

All removed components, including doors and other structural parts, must be delivered together with the appliance to an authorized recycling or dismantling facility.

The dismantling/recycling center will apply state of the art technologies and methods available to them to effectively disassemble the products for best recyclability.

Note that printed circuit boards, electrical motors or other components identified in European Union legislation to be of high critical raw materials recovery potential need to be addressed specifically.

In case of doubts or questions, always refer to your reference customer care service.

Before disposing of the appliance, make sure to remove any food and organic residues. Carefully inspect its physical condition and preservation state, checking for potential leaks of liquids or gases, as well as for broken parts that may pose hazards during handling and subsequent dismantling.

The symbol on the product indicates that this product should not be treated as domestic waste, but must be correctly disposed of in order to prevent any negative consequences for the environment and human health. For further information on the recycling of this product, contact the local dealer or agent, the customer care service or the local body responsible for waste disposal.

NOTE!
When dismantling the appliance, any marking, this manual and other documents concerning the appliance must be destroyed.

CE

Electrolux Professional SPA
Viale Treviso 15
33170 Pordenone
www.electroluxprofessional.com