Tilting pressure braising pan

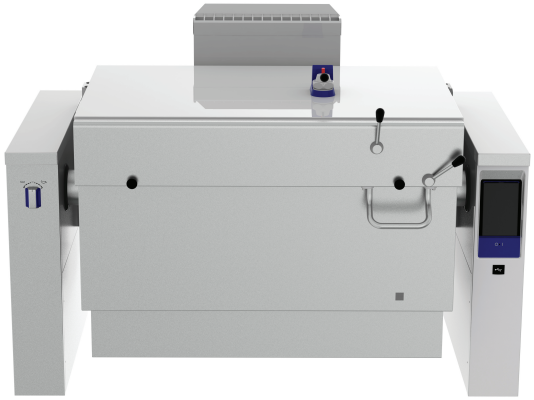

ProThermetic
PUET gas

EN-US Installation and Operating manual

599A1AU02- 2026.09

Foreword

Read the following instructions, including the warranty terms before installing and using the appliance.

Visit our website www.electroluxprofessional.com and open the Support section to:

Register your product

Get hints & tips of your product, service and repair information

The installation, use and maintenance manual (hereinafter Manual) provides the user with information necessary for correct and safe use of the appliance.

The following must not be considered a long and exacting list of warnings, but rather a set of instructions suitable for improving appliance performance in every respect and, above all, preventing injury to persons and animals and damage to property due to improper operating procedures.

All persons involved in appliance transport, installation, commissioning, use and maintenance, repair and disassembly must consult and carefully read this manual before carrying out the various operations, in order to avoid wrong and improper actions that could compromise the appliance's integrity or endanger people. Make sure to periodically inform the user regarding the safety regulations. It is also important to instruct and update personnel authorised to operate on the appliance, regarding its use and maintenance.

The manual must be available to operators and carefully kept in the place where the appliance is used, so that it is always at hand for consultation in case of doubts or whenever required.

If, after reading this manual, there are still doubts regarding appliance use, do not hesitate to contact the Manufacturer or the authorised Service Centre to receive prompt and precise assistance for better operation and maximum efficiency of the appliance. During all stages of appliance use, always respect the current regulations on safety, work hygiene and environmental protection. It is the user's responsibility to make sure the appliance is started and operated only in optimum conditions of safety for people, animals and property.

IMPORTANT

- The manufacturer declines any liability for operations carried out on the appliance without respecting the instructions given in this manual.
- The manufacturer reserves the right to modify the appliances presented in this publication without notice.
- No part of this manual may be reproduced.
- This manual is available in digital format by:
  - contacting the dealer or reference customer care;
  - downloading the latest and up to date manual on the web site www.electroluxprofessional.com;
- The manual must always be kept in an easily accessed place near the appliance. Appliance operators and maintenance personnel must be able to easily find and consult it at any time.

QR Code

Find the QR code identification sticker on the first page of this guide or on appliance to access the website and free open data/files (PNC/serial number, video, documentation etc.).

Make sure to have the application for QR code reading on your device and an internet connection.

Scan the QR code to consult the available documents for this appliance.

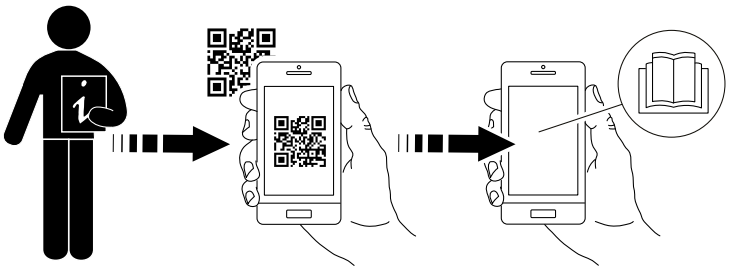

Contents

A WARNING AND SAFETY INFORMATION 5
A.1 General information 5
A.2 Personal protection equipment 6
A.3 General safety 6
A.4 ProThermetic general safety 7
A.5 Protection devices installed on the appliance 7
A.6 Safety signs to be placed on the appliance or near its area 7
A.7 Reasonably foreseeable improper use 8
A.8 Residual risks 8
A.9 Transport, handling and storage 8
A.10 Installation and assembly 9
A.11 Electrical connection 9
A.12 Water connection 9
A.13 Positioning 9
A.14 Appliance space limitations 9
A.15 Appliance cleaning 9
A.16 Preventive Maintenance 9
A.17 Parts and accessories 10
A.18 Precautions for use and maintenance 10
A.19 Appliance maintenance 10
A.20 Appliance disposal 10
B WARRANTY TERMS AND EXCLUSIONS 10
C TECHNICAL DATA 11
C.1 Data plate position 11
C.2 Appliance and manufacturer's identification data 11
C.3 How to interpret the factory description 11
C.4 Gas consumption 11
C.5 Technical data 11
D GENERAL INFORMATION 12
D.1 Introduction 12
D.2 Intended use and restrictions 12
D.3 Testing and inspection 12
D.4 Copyright 12
D.5 Keeping the manual 12
D.6 Recipients of the manual 12
D.7 Definitions 12
D.8 Responsibility 13
D.9 Customer packaging checks 13
D.10 Storage 13
E INSTALLATION DIAGRAMS 13
E.1 Installation type 13
E.2 Dimension drawing for floor installation 13
E.2.1 Installation points 13
E.2.2 Dimensions 14
E.3 Drain floor 14
E.3.1 Floor diagram 14
E.3.2 Dimensions 14
E.4 Installation and connection diagram 15
E.5 Accessing the appliance’s internal components 16
F INSTALLATION AND ASSEMBLY 16
F.1 Introduction 16
F.2 Customer's responsibilities 16
F.3 Before installation 16
F.4 Installing on plinth or adjustable feet 17
F.5 Disposal of packing 17
F.6 Securing or adjusting to the floor (optional) 17
F.7 Fastening multiple appliances together 17
F.8 Sealing 18
G ELECTRICAL INSTALLATION 19
G.1 Mains connection 19
G.2 Power cable 19
G.3 Potential equalisation 19
H GAS INSTALLATION 19
H.1 Mains connection 19
H.2 Conversion to another type of gas 20
H.3 Fume exhaust 20
H.4 Before connecting 20
H.5 Gas connection 20
H.5.1 Connecting to the gas supply 20
H.5.2 Gas connection for floor and wall appliances 20
H.5.3 Sealing 21
H.5.4 Check the gas supply pressure 21

H.5.5 Adjusting the gas flow speed on ignition ... 21
H.6 Safety thermostat ... 21
I CONNECTING THE WATER SUPPLY ... 22
I.1 Water connection ... 22
I.2 Backflow protection ... 22
I.3 Drinking water supply ... 22
I.4 Mixing tap ... 22
I.5 Water filling automatic ... 23
J NORMAL APPLIANCE USE ... 23
J.1 Characteristics of personnel enabled to operate on the appliance ... 23
J.2 Basic requirements for appliance use ... 23
K PRODUCT DESCRIPTION ... 23
K.1 Use ... 23
K.2 Appliance overview ... 24
K.3 Control panel ... 24
K.4 Emergency stop (optional) ... 24
L OPERATING INSTRUCTIONS ... 24
L.1 First use ... 24
L.2 Switching on/off ... 24
L.3 Touch control panel ... 24
L.3.1 Starting page ... 24
L.3.2 Main menu ... 24
L.3.3 Manual mode ... 25
L.3.4 Drawer area ... 26
L.3.5 Additional functions ... 26
L.3.6 Programs mode ... 28
L.3.7 Start a cooking cycle ... 29
L.3.8 End cycle ... 29
L.3.9 Settings ... 29
L.3.10 Alarm messages ... 31
L.3.11 Preventive maintenance ... 31
L.4 Connectivity kit ... 31
L.5 Pressure cooking ... 32
L.6 Safety valve on the lid ... 33
L.7 Drain tap ... 33
L.7.1 Opening the drain tap ... 33
L.7.2 Dismounting the drain tap ... 33
L.7.3 Dismounting the drain tap cover ... 34
L.8 Tilting the appliance ... 34
M APPLIANCE CLEANING AND MAINTENANCE ... 34
M.1 Care information ... 34
M.2 Cleaning introduction ... 34
M.3 Stainless steel surfaces ... 35
M.4 Daily cleaning ... 35
M.5 Drain tap ... 35
M.6 Descaling ... 36
M.7 Periods of non-use ... 36
M.8 Informations for maintenance ... 36
M.9 Maintenance intervals ... 36
N TROUBLESHOOTING ... 36
N.1 Introduction ... 36
N.2 Troubleshooting ... 37
O APPLIANCE DISPOSAL ... 37
O.1 Procedure regarding appliance disposal ... 37

A WARNING AND SAFETY INFORMATION

A.1 General information

To ensure safe use of the appliance and a proper understanding of the manual it is necessary to be familiar with the terms and typographical conventions used in the documentation. The following symbols are used in the manual to indicate and identify the various types of hazards:

WARNING
Danger for the health and safety of operators.

WARNING
Danger of electrocution - dangerous voltage.

CAUTION
Risk of damage to the appliance or the product.

IMPORTANT
Important instructions or information on the product

Equipotentiality

Read the instructions before using the appliance

Clarifications and explanations

WARNING
Improper installation, adjustment, alteration, service or maintenance can cause property damage, injury or death. Read the installation, operating and maintenance instructions thoroughly before installing or servicing this equipment.

FOR YOUR SAFETY
Do not store or use gasoline or other flammable materials, vapours and liquids in the vicinity of this or any other appliance.

IMPORTANT
After installation put in a prominent location suitable instructions to be followed in the event gas is smelt. This information shall be obtained by consulting the local gas supplier.

- Only specialised personnel are authorised to operate on the appliance.
- This appliance is to be intended for commercial and collective use, for example in kitchens of restaurants, canteens, hospitals and in commercial enterprises such as bakeries, butcheries, etc., not for continuous mass production of food. Any other use is deemed improper.
- This appliance must not be used by minors and adults with limited physical, sensory or mental abilities or without adequate experience and knowledge regarding its use.
- Do not let children play with the appliance.
- Keep all packaging and detergents away from children.
- Do not store explosive substances, such as pressurized containers with flammable propellant, in this appliance.
- Refer to the data given on the appliance’s data plate for relations with the Manufacturer (e.g. when ordering spare parts, etc.).
- When scrapping the appliance, the marking must be destroyed.
- Save these instructions carefully for further consultation by the various operators.

A.2 Personal protection equipment

Summary table of the Personal Protection Equipment (PPE) to be used during the various stages of the appliance's service life.

Stage	Protective garments	Safety footwear	Gloves	Glasses	Safety helmet
Transport	—	●	○	—	○
Handling	—	●	●	—	—
Unpacking	○	●	●	—	—
Installation	—	●	●[1]	—	—
Normal use	○	○	○[2]	○	—
Adjustments	—	○	—	—	—
Routine cleaning	○	●	●[1–3]	○	—
Extraordinary cleaning	○	●	●[1–3]	○	—
Maintenance	○	●	●	—	—
Dismantling	○	●	●	—	—
Scrapping	○	●	●	—	—
Key:					
●	**PPE REQUIRED**				
○	**PPE AVAILABLE OR TO BE USED IF NECESSARY**				
—	**PPE NOT REQUIRED**				

1. During these operations, gloves must be cut-resistant. Failure to use the personal protection equipment by operators, specialized personnel or users can involve exposure to harm to health (depending on the model).
2. During these operations, gloves must be heatproof to protect hands from contact with hot food or hot parts of the appliance and/or when removing hot items from it. Failure to use the personal protection equipment by operators, specialised personnel or users can involve exposure to chemical risk and cause possible harm to health (depending on the model).
3. During these operations, gloves must be suitable for contact with chemical substances used (refer to the safety data sheet of the substances used for information regarding the required PPE). Failure to use the personal protection equipment by operators, specialized personnel or users can involve exposure to chemical risk and cause possible harm to health (depending on the model).

A.3 General safety

- The appliances are provided with electric and/or mechanical safety devices for protecting workers and the appliance itself.
- Never operate the appliance, removing, modifying or tampering with the guards, protection or safety devices.
- Do not make any modifications to the parts supplied with the appliance.
- Several illustrations in the manual show the appliance, or parts of it, without guards or with guards removed. This is purely for explanatory purposes. Do not use the appliance without the guards or with the protection devices deactivated.

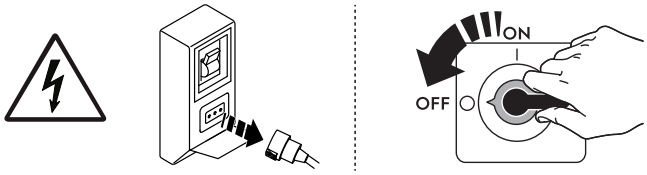

Disconnect the appliance from the power supply before carrying out any installation, assembly, cleaning or maintenance procedure.

- Do not remove, tamper with or make illegible the marking and safety, danger and instruction signs and labels on the appliance.
- Before servicing, disconnect the electrical service and place a red tag at the disconnect switch to indicate work is being done on that circuit.
- Air recirculation must take into account the air necessary for combustion, 2 m³/h/kW of gas power, and also the “well-being“ of persons working in the kitchen.
- Inadequate ventilation causes asphyxia. Do not obstruct the ventilation system in the place where this appliance is installed. Do not obstruct the vents or ducts of this or other appliances.
- The A-weighted emission sound pressure level does not exceed 70 dB(A).
- Turn the appliance off in case of fault or poor operation.
- Do not use products (even if diluted) containing chlorine (sodium hypochlorite, hydrochloric or muriatic acid, etc.) to clean the appliance or the floor under it.
- Carefully avoid exposure of the equipment to ozone - do not use ozonizers in the rooms where the equipment is installed.
- Do not spray aerosols in the vicinity of this appliance while it is in operation.
- Never check for leaks with an open flame.
- The following operations have to be carried out by specialised authorised personnel or Customer Care Service provided with all the appropriate personal protection equipment (A.2 *Personal protection equipment*), tools, utensils and ancillary means, who can ask the manufacturer to supply a servicing manual:
  - Installation and assembly;
  - Positioning;

– Electrical connection;
– Appliance cleaning, repair and extraordinary maintenance;
– Appliance disposal;
– Work on electrical equipment;
– Gas installation/connection and gas conversion;

A.4 ProThermetic general safety

- The maximum filling level must not exceed the relevant marking.
  Exceeding the maximum fill mark may cause scalding as a result of hot food spilling and/or flowing over the edge of the pot.
- Do not place any objects on the closed lid during operation.
- Do not heat closed containers inside the appliance to avoid the risk of explosion.
- Do not use the appliance to dry tea towels and other textiles.
- Be careful when you open the lid, because hot steam could pour out.
- Be careful when emptying the appliance as there is a risk of burns.
- Overheated oil/fat can self-ignite. Never put water on burning oil or fat.
- Be careful when introducing oil, grease, water or other food into the preheated hot appliance as it can cause splashes.
- Fluctuations in gas quality and pressure must be within the prescribed tolerances.
  In the event of deviations exceeding the permissible value, do not use the appliance.
- Pay special attention to the presence of foam. If the lid is opened at a low residual overpressure, hot food can flow out and injure the operating personnel.
  Depending on the food to be cooked, reduce the filling level to avoid foam overflowing.
- Never use this appliance for frying.
- In pressure appliances, after cooking with the lid closed, first release the pressure from the cooking chamber and do not open the lid until the pressure is completely exhausted inside the appliance.
- The appliance's performance data must not be changed.
- The appliance must not be operated in the vicinity of inflammable materials or vapours.
- Operating personnel must not operate the safety valve (including lifting or rotating the cap), otherwise hot steam could escape and cause injury and breakdown.

A.5 Protection devices installed on the appliance

Guards

The appliance has:

- fixed guards (e.g. casings, covers, side panels, etc.), fixed to the appliance and/or frame with screws or quick-release connectors that can only be removed or opened with tools; therefore the user must not remove or tamper with such devices. The Manufacturer declines any liability for damage due to tampering or their non-use;
- appliance electrical equipment access panels or doors, made from hinged panels openable with tools. The panel or the door must not be opened when the appliance is connected to the power supply.

A.6 Safety signs to be placed on the appliance or near its area

Prohibition	Meaning
	do not remove the safety devices
	do not use water to extinguish fires (placed on electrical parts)
	Keep the area around the appliance clear and free from combustible materials. Do not keep flammable materials in the vicinity of the appliance

Danger	Meaning
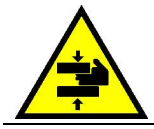	danger of crushing hands
	caution hot surface
	danger of electrocution (shown on electrical parts with indication of voltage)

A.7 Reasonably foreseeable improper use

Improper use is any use different from that specified in this manual. During appliance operation, other types of work or activities deemed improper and that in general can involve risks for the safety of operators and damage to the appliance are not allowed. Reasonably foreseeable improper use includes:

- lack of appliance maintenance, cleaning and periodical checks;
- structural changes or modifications to the operating logic;
- tampering with the guards or safety devices;
- failure to use personal protection equipment by operators, specialised personnel and maintenance personnel;
- failure to use suitable accessories (e.g. use of unsuitable equipment or ladders);
- keeping combustible or flammable materials, or in any case materials not compatible with or pertinent to the work, near the appliance;
- wrong appliance installation;
- placing in the appliance any objects or things not compatible with its use, or that can damage the appliance, cause injury or pollute the environment;
- climbing on the appliance;
- non-compliance with the requirements for correct appliance use;
- other actions that give rise to risks not eliminable by the Manufacturer.

A.8 Residual risks

The appliance has several risks that were not completely eliminated from a design standpoint or with the installation of adequate protection devices. Nevertheless, through this manual the Manufacturer has taken steps to inform operators of such risks, carefully indicating the personal protection equipment to be used by them. In order to reduce the risks, provide for sufficient spaces while installing the unit.

To preserve these conditions, the areas around the appliance must always be:

- kept free of obstacles (e.g. ladders, tools, containers, boxes, etc.);
- clean and dry;
- well lit.

For the Customer's complete information, the residual risks remaining on the appliance are indicated below: such actions are deemed improper and therefore strictly forbidden.

Residual risk	Description of hazardous situation
Slipping or falling	The operator can slip due to water, any liquid or dirt on the floor
Burns/abrasions (e.g. heating elements, cold pan, cooling circuit plates and pipes)	The operator deliberately or unintentionally touches some components inside the appliance without using protective gloves.
Electrocution	Contact with live parts during maintenance operations carried out with the electrical panel powered
Crushing or injury	For tipping appliances only and during tilting, the operator may be crushed between the pan and the parts that remain stationary.
Tipping of loads	When handling the appliance or the packing containing it, using unsuitable lifting systems or accessories or with the unbalanced load
Chemical	Contact with chemical substances (e.g. detergent, rinse aid, scale remover, etc.) without taking adequate safety precautions. Therefore always refer to the safety cards and labels on the products used.
Sudden closure	The operator for normal appliance use could suddenly and deliberately close the lid.

A.9 Transport, handling and storage

- Transport (i.e. transfer of the appliance from one place to another) and handling (i.e. transfer inside workplaces) must occur with the use of special and adequate means.
- Please refer to indications on packaging for stackability during transport, handling and storage.

- Do not stand under suspended loads during loading or unloading operations. Unauthorized personnel must not enter the work area.
- The weight of the appliance alone is not sufficient to keep it steady.
- For appliance handling, do not lift and anchor it to movable or weak parts such as: casings, electrical raceways, pneumatic parts, etc.
- Do not push or pull the appliance to move it, as it may tip over. Use proper tool to lift the appliance.
- Arrange a suitable area with flat floor for appliance unloading and storage operations.
- Appliance transport, handling, shifting and storage personnel must be adequately instructed and trained regarding the safely use of lifting systems and personal protection equipment suitable for the type of operation carried out.
- When removing the anchoring systems, make sure the stability of the appliance parts does not depend on the anchoring and, therefore, that this operation does not cause the load to fall off the vehicle. Before unloading the appliance components, make sure all the anchoring systems are removed.

A.10 Installation and assembly

- The operations described must be carried out in compliance with the current safety regulations and provisions in force in the country of use.
- The plug, if present, must be accessible after positioning the appliance in the place of installation.
- When installing the appliance, make sure gas set and pressure is carried out in compliance with that specified on the data plate.
- The appliance is not suitable for installation outdoors and/or in places exposed to atmospheric agents (rain, direct sunlight, etc.).

A.11 Electrical connection

- The electric supply connection must meet all national and local electrical code requirements.
- The power supply system must be suitable for the rated current of the connected appliance.
- The information regarding the appliance power supply voltage and frequency is given on the data plate.
- Install between the power cable and the electric line a differential thermal-magnetic switch suitable for the absorption specified on the data plate, with contact gap enabling complete disconnection in category III overvoltage conditions and complying with the regulations in force.

  For the correct sizing of the switch or plug, refer to the absorbed current specified on the appliance data plate.
- If the power cable is damaged or too short, it must be replaced by the Customer Care Service or in any case by specialised personnel, in order to prevent any risk.
- The manufacturer declines any liability for damage or injury resulting from breach of the above rules or non-compliance with the electrical safety regulations in force in the country where the appliance is used.
- Verify that a safety circuit breaker is installed between the power cable of the appliance and the mains electric line. The contact opening max. distance and leakage current must comply with the local safety regulations.

A.12 Water connection

Water connection must be carried out in compliance with the regulations and provisions in force with the country.

- The appliance must be supplied with drinking water at a pressure of maximum 6 bar (600 kPa).
- **WARNING!** The manufacturer declines any liability if the safety regulations are not respected.

A.13 Positioning

- Install the appliances, taking all the safety precautions required for this type of operation, also respecting the relevant fire-prevention measures.
- The installation diagram gives the appliance overall dimensions and the position of connections (gas, electricity, water). Check that they are available and ready for making all the necessary connections.
- Prevent the areas where the appliance is installed to be polluted with corrosive substances (chlorine, etc.). The manufacturer declines any liability for corrosive effects due to external causes.

A.14 Appliance space limitations

- Do not install the appliance on flammable walls. If an appliance is set up next to or against temperature-sensitive walls, maintain an adequate space to enable subsequent servicing or maintenance operations.
- A suitable space must be left around the appliance (for operations, maintenance, etc.).
- This space must be increased in case of use and/or transfer of other equipment and/or means or if exit routes are necessary inside the workplace.

A.15 Appliance cleaning

- Do not touch the appliance with wet hands or feet or when barefoot.
- Put the appliance in safe conditions before starting any cleaning operation.
- Do not allow oil or grease to come into contact with plastic parts. Do not allow dirt, fat, food or other residuals to form deposits on the appliance.
- Respect the requirements for the various routine and extraordinary maintenance operations. Non-compliance with the instructions can create risks for personnel.
- Do not spray water or use water jets, steam cleaner or high pressure cleaner.

A.16 Preventive Maintenance

In order to ensure the safety and performance of your equipment, it is recommended that service is undertaken by Electrolux Professional authorised engineers every 12 months, in accordance with Electrolux Professional Service Manuals. Please contact your local Electrolux Professional Service Centre for further details.

A.17 Parts and accessories

Use only original accessories and/or spare parts. Failure to use original accessories and/or spare parts will invalidate the original manufacturer warranty and may render the appliance not compliant with the safety standard.

A.18 Precautions for use and maintenance

- Risks mainly of a mechanical, thermal and electrical nature exist in the appliance. Where possible the risks have been neutralised:
  - directly, by means of adequate design solutions.
  - indirectly by using guards, protection and safety devices.
- Any anomalous situations are signalled on the control panel display.
- During maintenance several risks remain, as these could not be eliminated, and must be neutralised by adopting specific measures and precautions.
- Do not carry out any checking, cleaning, repair or maintenance operations on moving parts. Workers must be informed of this prohibition by means of clearly visible signs.
- Make sure to periodically check correct operation of all the safety devices and the insulation of electrical cables, which must be replaced if damaged.

In case of a significant anomaly (e.g. short circuits, wires coming out of the terminal block, motor breakdowns, worn electrical cable sheathing, etc.) the operator for normal appliance use must:

- immediately deactivate the appliance and disconnect all the supplies (electricity, gas, water).

Before carrying out any operation on the appliance, always consult the manual which gives the correct procedures and contains important information on safety.

A.19 Appliance maintenance

- The inspection and maintenance intervals depend on the actual appliance operating conditions and ambient conditions (presence of dust, damp, etc.), therefore precise time intervals cannot be given. In any case, careful and periodical appliance maintenance is advisable in order to minimise service interruptions.
- It is advisable to stipulate a preventive and scheduled maintenance contract with the Customer Care Service.
- Put the appliance in safe conditions before starting any maintenance operation.

A.20 Appliance disposal

- Make the appliance unusable by removing the power cable and any compartment closing devices, to prevent the possibility of someone becoming trapped inside.

B WARRANTY TERMS AND EXCLUSIONS

If the purchase of this product includes warranty coverage, warranty is provided in line with local regulations and subject to the product being installed and used for the purposes as designed, and as described within the appropriate equipment documentation.

Warranty will be applicable where the customer has used only genuine spare parts and has performed maintenance in accordance with Electrolux Professional user and maintenance documentation made available in paper or electronic format.

Electrolux Professional strongly recommends using Electrolux Professional approved cleaning, rinse and descaling agents to obtain optimal results and maintain product efficiency over time.

The Electrolux Professional warranty does not cover:

- service trips cost to deliver and pick up the product;
- installation;
- training on how to use/operate;
- replacement (and/or supply) of wear and tear parts unless resulting from defects in materials or workmanship reported within one (1) week from the failure;
- correction of external wiring;
- correction of unauthorized repairs as well as any damages, failures and inefficiencies caused by and/or resulting from;
  - insufficient and/or abnormal capacity of the electrical systems (current/voltage/frequency, including spikes and/or outages);
  - inadequate or interrupted water supply, steam, air, gas (including impurities and/or other that does not comply with the technical requirements for each appliance);
  - plumbing parts, components or consumable cleaning products that are not approved by the manufacturer;
  - customer's negligence, misuse, abuse and/or non-compliance with the use and care instructions detailed within the appropriate equipment documentation;
  - improper or poor: installation, repair, maintenance (including tampering, modifications and repairs carried out by third parties not authorized) and modification of safety systems;
  - Use of non-original components (e. g.: consumables, wear and tear, or spare parts);
  - environment conditions provoking thermal (e. g. overheating/freezing) or chemical (e. g. corrosion/oxidation) stress;
  - foreign objects placed in- or connected to- the product;
  - accidents or force majeure;
  - transportation and handling, including scratches, dents, chips, and/or other damage to the finish of the product, unless such damage results from defects in materials or workmanship and is reported within one (1) week of delivery unless otherwise agreed;
- product with original serial numbers that have been removed, altered or cannot be readily determined;
- replacement of light bulbs, filters or any consumable parts;
- any accessories and software not approved or specified by Electrolux Professional.

Electrolux Professional warranty will be void and manufacturer shall have no liability related thereto in case of any modification of the product or related hardware/software/programming.

Warranty does not include scheduled maintenance activities (including the parts required for it) or the supply of cleaning agents unless specifically covered within any local agreement, subject to local terms and conditions.

Check on Electrolux Professional website the list of authorized customer care.

C TECHNICAL DATA

C.1 Data plate position

The data plate is located on the right side of the fixed console, on the inner wall (see fig. below).

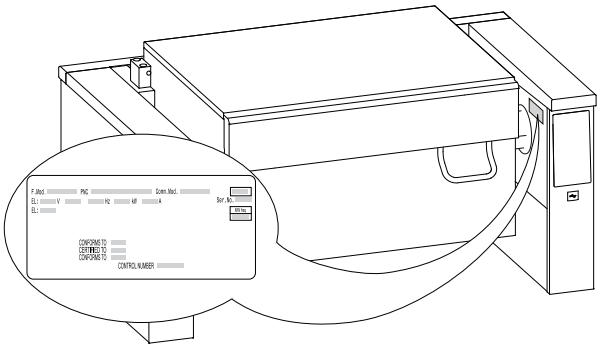

C.2 Appliance and manufacturer's identification data

The data plate gives the product identification and technical data.

An example of the marking or data plate on the appliance is given below:

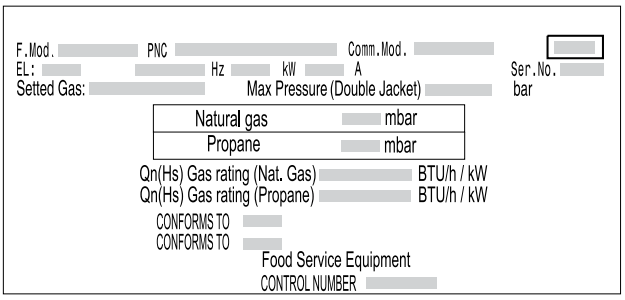

The meaning of the various information given on it is listed below:

PNC	production number code
Comm.Mod.	commercial description
Ser. No.	serial number
F.Mod.	factory description of product
Max pressure (double Jacket)	maximal gas pressure in Bar
Setted gas	standard gas delivery
Natural gas	delivered gas type pressure in W.C. / mBar
Propane	delivered gas type pressure in W.C. / mBar
Gas rating (Nat. Gas)	gas power in BTU/h / kW
Gas rating (Propane)	gas power in BTU/h / kW
Hz	power supply frequency
kW	power input
A	absorbed current
Conforms to	regulations in force in the country of use
Control number	Approval author. control no.

C.3 How to interpret the factory description

The factory description on the data plate has the following meaning:

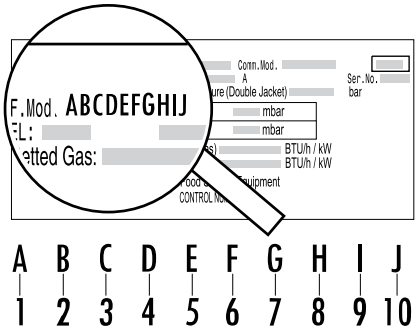

1 - Product line

P	ProThermetic

2 - Family

U	Universal Pan

3 - Pan shape

E	Rectangular

4- Type

T	Tilting

5 + 6 - Capacity

09	90 litres
17	170 litres

7 - Power supply

G	Gas

8 - Configuration

C	floorstanding, depth 900 mm, height 700 mm

9 - Electrical connection

W	120 V / 1N ~

10 - Option

U	for USA

C.4 Gas consumption

1013 mbar / 15°C / at sea level.

Output kW	Natural gas H G20 (m^3/h)	Propane G31 (kg/h)
18	1,68	1,42
29	2,72	2,28

C.5 Technical data

	PUET 09	PUET 17
Internal pan dimensions (mm / inches): width	680 / 26.8	1050 / 41.3
Internal pan dimensions (mm / inches): depth	558 / 22	558 / 22
Internal pan dimensions (mm / inches): height	274 / 10.8	326 / 12.8
Dimension of heating surface (mm / inches): width	610 / 24.01	980 / 38.58

	PUET 09	PUET 17
Dimension of heating surface (mm / inches): depth	480 / 16.90	480 / 18.90
Max. operating pressure (bar)	0.45	0.45

	PUET 09	PUET 17
Max. operating pressure (psi)	6.52	6.52

	Connection ISO 7/1 Ø	Type exhaust flue A	Gas power kW	Voltage / Phases V / Nr	Frequency Hz	Power supply cable section mm²	Amperage A
P U E T 0 9 G C W U	1″	A1	18	120 / 1N	60	1	2
P U E T 1 7 G C W U	1″	A1	29	120 / 1N	60	1	2

Water protection class: IPX6.

D GENERAL INFORMATION

D.1 Introduction

This manual contains information relevant to various appliances. The product images in this guide are only an example.

The drawings and diagrams given in the manual are not in scale. They supplement the written information with an outline, but are not intended to be a detailed representation of the appliance supplied.

The numerical values given on the appliance installation diagrams refer to measurements in millimeters and/or inches.

D.2 Intended use and restrictions

This appliance is designed for cooking food. It is intended for collective use.

Any other use is deemed improper.

NOTE!
The manufacturer declines any liability for improper use of the product.

D.3 Testing and inspection

Our appliances have been designed and optimized, with laboratory testing, in order to obtain high performance and efficiency.

The appliance is shipped ready for use.

Passing of the tests (visual inspection - gas/electrical test - functional test) is guaranteed and certified by the specific enclosures.

To ensure protection class compliance, all seals must remain in perfect condition and all components must be properly assembled after installation, repairs and maintenance work.

D.4 Copyright

This manual is intended solely for consultation by the operator and can only be given to third parties with the permission of Electrolux Professional.

D.5 Keeping the manual

The manual must be carefully kept for the entire life of the appliance, until scrapping. The manual must stay with the appliance in case of transfer, sale, hire, granting of use or leasing.

D.6 Recipients of the manual

This manual is intended for:

- the carrier and handling personnel;
- installation and commissioning personnel;
- the employer of appliance users and the workplace manager;
- operators for normal appliance use;
- specialised personnel - Customer Care service (see service manual).

D.7 Definitions

Listed below are the definitions of the main terms used in the manual. It is advisable to read them carefully before use.

Operator	appliance installation, adjustment, use, maintenance, cleaning, repair and transport personnel.
Manufacturer	Electrolux Professional or any other service centre authorised by Electrolux Professional.
Operator for normal appliance use	an operator who has been informed and trained regarding the tasks and hazards involved in normal appliance use.
Customer Care service or specialised personnel	an operator instructed/trained by the Manufacturer and who, based on his professional and specific training, experience and knowledge of the accident-prevention regulations, is able to appraise the operations to be carried out on the appliance and recognise and prevent any risks. His professionalism covers the mechanical, electrotechnical and electronics fields etc.
Danger	source of possible injury or harm to health.
Hazardous situation	any situation where an operator is exposed to one or more hazards.
Risk	a combination of probabilities and risks of injury or harm to health in a hazardous situation.
Protection devices	safety measures consisting of the use of specific technical means (guards and safety devices) for protecting operators against risks.
Guard	an element of a appliance used in a specific way to provide protection by means of a physical barrier.
Safety device	a device (other than a guard) that eliminates or reduces the risk; it can be used alone or in combination with a guard.
Customer	the person who purchased the appliance and/or who manages and uses it (e. g. company, entrepreneur, firm).
Electrocution	an accidental discharge of electric current on a human body.
Emergency stop device	a group of components intended for the emergency stop function; the device is activated with a single action and prevents or reduces damage to persons/appliances/property/animals.

D.8 Responsibility

The Manufacturer declines any liability for damage and malfunctioning caused by:

- non-compliance with the instructions contained in this manual;
- repairs not carried out in a workmanlike fashion, and replacements with parts different from those specified in the spare parts catalogue (the fitting and use of non-original spare parts and accessories can negatively affect appliance operation and invalidates the original manufacturer warranty);
- operations carried out by non-specialised personnel;
- unauthorized modifications or operations;
- missing, lack or inadequate maintenance;
- improper appliance use;
- unforeseeable extraordinary events;
- use of the appliance by uninformed and / or untrained personnel;
- non-application of the current provisions in the country of use, concerning safety, hygiene and health in the workplace.

The Manufacturer declines any liability for:

- damage caused by arbitrary modifications and conversions carried out by the user or the Customer;
- inaccuracies contained in the manual, if due to printing or translation errors.

The employer, workplace manager or service technician are responsible for identifying and choosing adequate and suitable personal protection equipment to be worn by operators, in compliance with regulations in force in the country of use.

Any supplements to the installation, use and maintenance manual the Customer receives from the Manufacturer will form an integral part of the manual and therefore must be kept together with it.

D.9 Customer packaging checks

- The forwarder is responsible for the goods during transport and delivery.
- Make a complaint to the forwarder in case of visible or hidden damage.
- Specify any damage or shortages on the dispatch note.
- The driver must sign the dispatch note: the forwarder can reject the claim if the dispatch note is not signed (the forwarder can provide the necessary form).
- For hidden damage or shortages becoming apparent only after unpacking, request the forwarder for inspection of the goods within and no later than 15 days after delivery.

After packaging checks

1. Remove the packaging.
   Take care when unpacking and handling of the appliance to not cause any shocks on itself.
2. Keep all the documentation contained in the packaging.

D.10 Storage

The appliance and/or its parts must be stored and protected from damp, in a non-aggressive place, free of vibrations and with room temperatures between 5°C / 41°F and 50°C / 122°F.

The place where the appliance is stored must:

- can take the appliance load,
- have a flat support surface to avoid deforming the appliance or damage to the support feet.

E INSTALLATION DIAGRAMS

E.1 Installation type

The appliance must always be installed in its intended location according to the relevant installation and connection diagrams (E *INSTALLATION DIAGRAMS*).

The appliance should be connected to fixed cables.

Installation options:

1. **Standing against the wall**
   - on adjustable feet
2. **Free standing**
   - on adjustable feet

The appliances are suitable for setting up as single appliances or as a group of appliances.

The ventilation engineer is responsible for assessing/planning a technically correct ventilation.

E.2 Dimension drawing for floor installation

E.2.1 Installation points

Floor installation

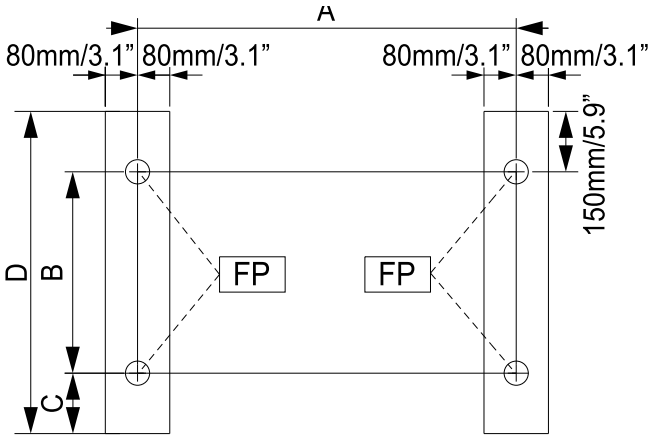

FP = floor attachment points

E.2.2 Dimensions

	A
mm	1040
in	40,94
mm	1440
in	56,69

B	C	D
600	150	900
23,62	5,91	35,43

E.3 Drain floor

E.3.1 Floor diagram

For these appliances, the emptying area is provided with tanks equipped with a movable upper grate and a floor drain, to be used during cleaning.

Floor tanks can be manufactured for a single appliance or for an entire group of appliances.

The tanks are normally cemented in the floor.

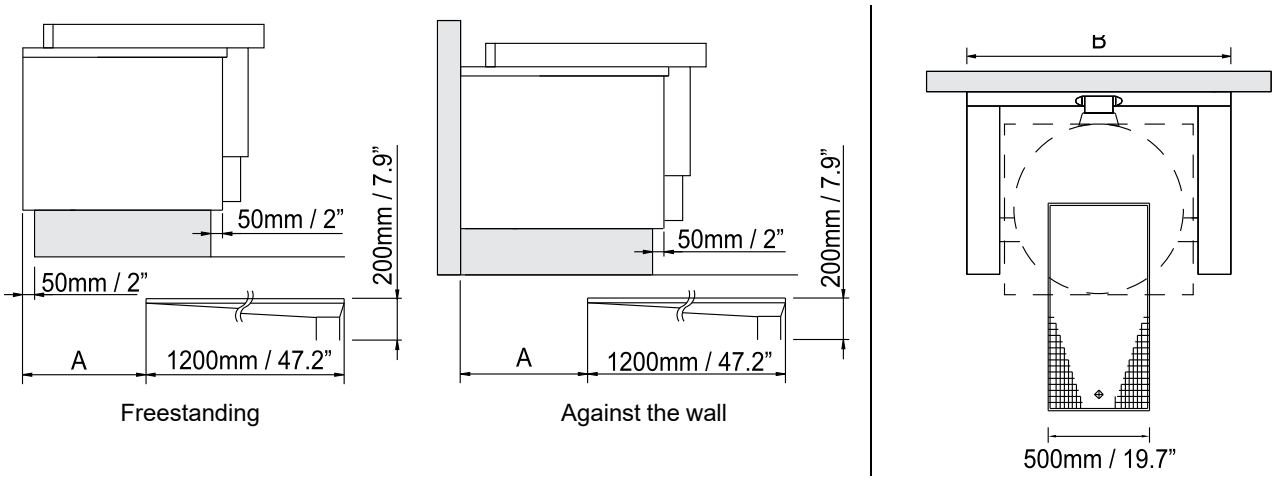

E.3.2 Dimensions

		90 l	170 l
A	mm	550	550
	in	21,65	21,65
B	mm	1200	1600
	in	47,24	62,99

E.4 Installation and connection diagram

Floor mounted appliances

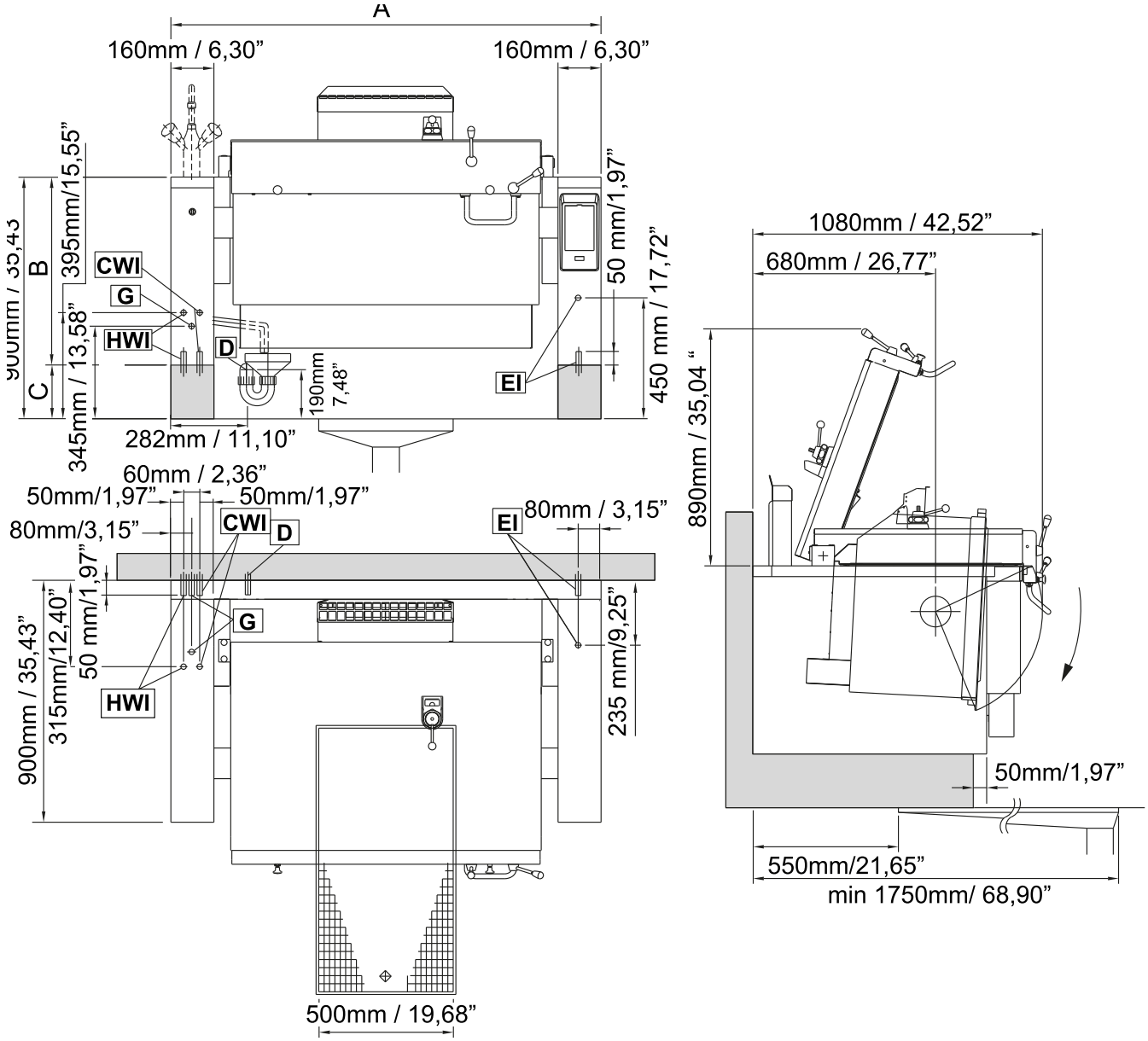

EI = Electrical connection
D = Drain
G = Gas connection

HWI = Hot water connection
CWI = Cold water connection

		90 L		170 L	
A	mm	1200		1600	
	in	42,2		62,9	
B	mm	700	800	700	800
	in	27,56	31,5	27,56	31,5
C	mm	200	100	200	100
	in	7,87	3,94	7,87	3,94

E.5 Accessing the appliance's internal components

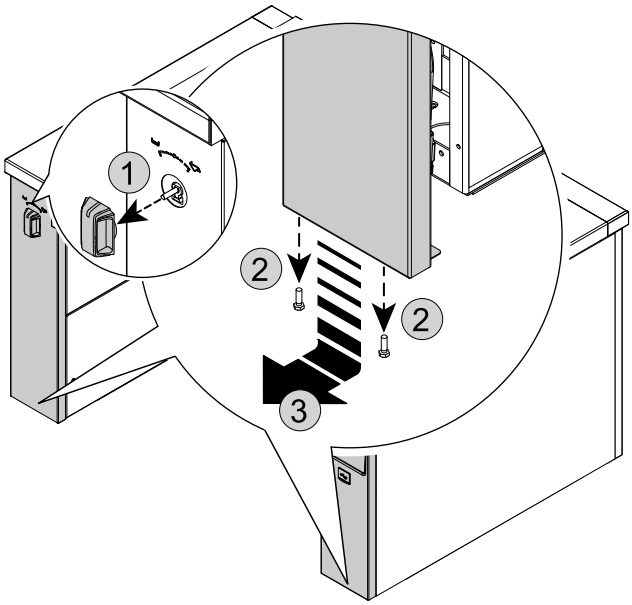

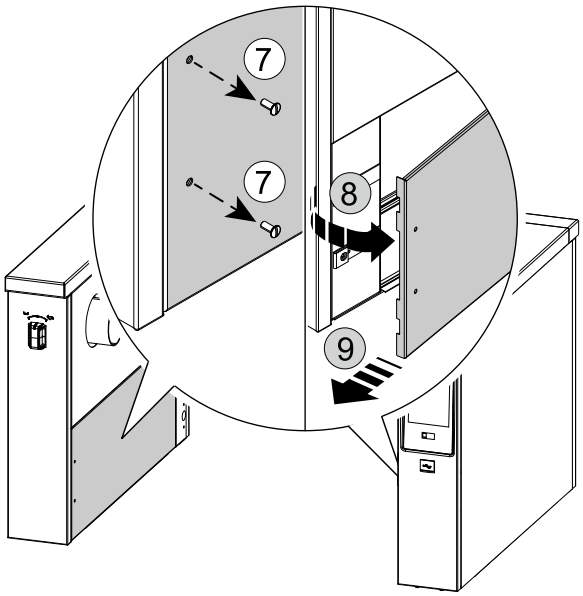

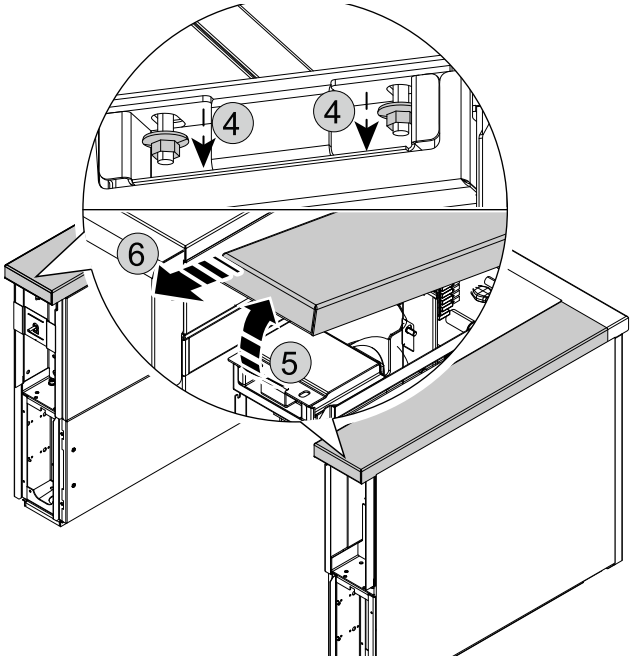

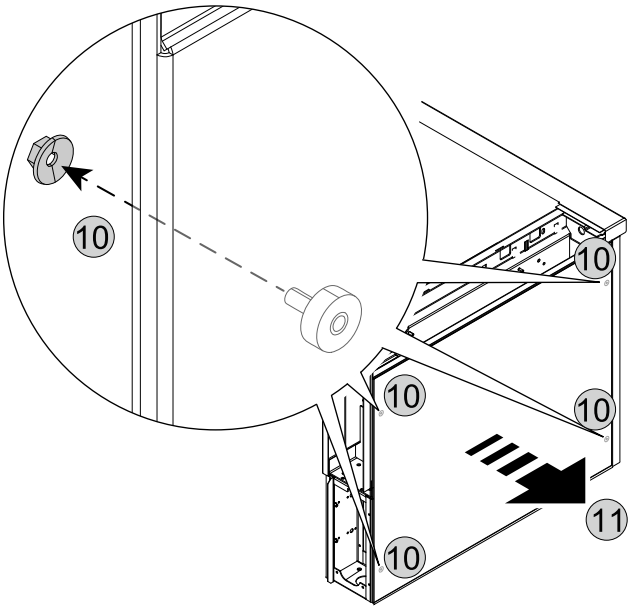

F INSTALLATION AND ASSEMBLY

F.1 Introduction

WARNING
Refer to "*WARNING AND SAFETY INFORMATION*".

To ensure correct operation of the appliance and maintain safe conditions during use, carefully follow the instructions given in this chapter.

Check and, if necessary, level the appliance after positioning. Incorrect levelling can cause appliance malfunctioning.

CAUTION
Keep the ventilation openings in the appliance casing or in the installation structure free of any obstructions.

F.2 Customer's responsibilities

The tasks and works required of the Customer are:

- check the floor planarity on which the appliance is placed;
- arrange an earthed power socket of suitable capacity for the input specified on the data plate;
- prearrange a high-sensitivity manual-reset magneto-thermal circuit-breaker;
- prearrange a device lockable in the open position for the connection to the power supply.
- install a rapid gas shutoff valve ahead of each individual appliance (depending on the model). Install the valve in an easily accessed place.
- Do not install the unit in environments where temperatures may fall below 0°C [32°F] or rise above 40°C [104°F].

NOTE!
For information regarding the electrical connection, refer to "A.11 *Electrical connection*".

F.3 Before installation

Depending on your model, prepare the following before the appliance is installed and positioned correctly:

- Fastening elements, i.e. drill holes and insert dowels.
- Prepare water, gas and electrical connections and install a shut-off valve, if necessary.

F.4 Installing on plinth or adjustable feet

NOTE!
If installing on a steel plinth or adjustable feet, always make sure these are attached to the appliance beforehand. There are no tools for taking the unit down from the transport pallet and putting it in place; all you need is manpower, with two to four men required depending on the size of the unit.

1. Transport the appliance on its transport pallet directly in front of the point of installation.
   The installation connections that are sticking out of the floor should be as close as possible to the side of the transport pallet.

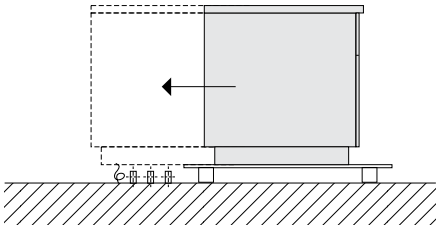

2. Shift the appliance onto the transport pallet such that all of the installation connections lie within the appliance.
3. Tip the appliance until it is standing on the floor. Then lift at the front and remove the transport pallet.

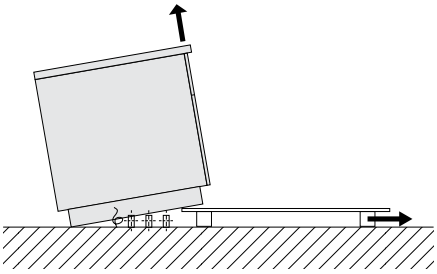

4. Carefully lower the appliance and then move it into the correct position.
5. Align the appliance horizontally and secure it.

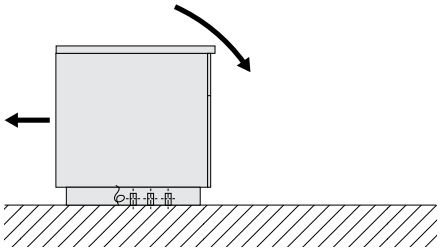

6. Remove the outer protective film and the edge covers, taking care not to scratch the surface of the appliance.
   Very slowly pull off the protective film on the stainless steel surfaces, without ripping, to prevent any adhesive residue.
   Remove any adhesive residue with a non-corrosive solvent. Then rinse and dry the spot thoroughly.

For water and electrical connection, remove the covers and inspection panels, refer to paragraph E.5 *Accessing the appliance's internal components*.

When successful installation is complete reattach the panels.

F.5 Disposal of packing

The packing must be disposed of in compliance with the current regulations in the country where the appliance is used. All the packing materials are environmentally friendly.

They can be safely kept, recycled, or burned in an appropriate waste incineration plant. Recyclable plastic parts are marked as follows:

PE	**Polyethylene** • Outer wrapping • Instructions bag • Protective film for gas nozzle
PP	**Polypropylene** • Straps • Top packaging panels
PS	**Polystyrene foam** • Corner protectors

The parts in wood and cardboard can be disposed of, respecting the current regulations in the country where the appliance is used.

F.6 Securing or adjusting to the floor (optional)

If you need to secure it to the floor, the appliance comes with compatible adjustable feet.

We recommend you adjust the feet so you end up with a working height of 900 mm / 35,43″. Level the unit with a spirit level.

A. **Attaching the unit with screws**
   The feet have metal plates which may be secured to the floor using screws .

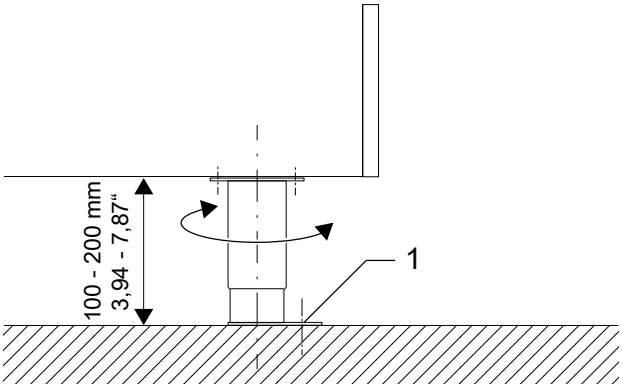

B. **Attaching the unit by welding**
   The metal plate underneath the feet must be welded to the floor with a continuous weld around the outer edge.

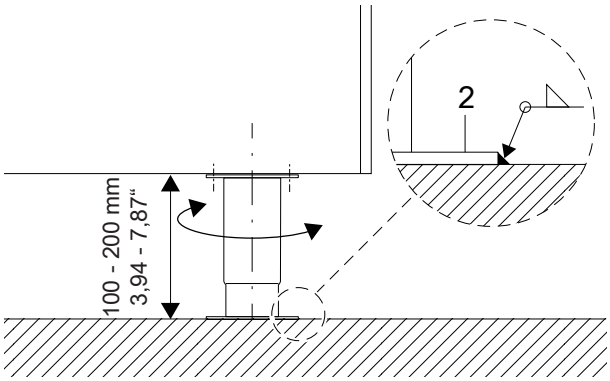

F.7 Fastening multiple appliances together

IMPORTANT
Do not install the side panels on the sides where the appliances are mounted together.
It is mandatory for marine versions.

1. First remove the knob, refer to paragraph E.5 *Accessing the appliance's internal components*.
   Then remove the user interface panel and the front panel by undoing the screws at the bottom.

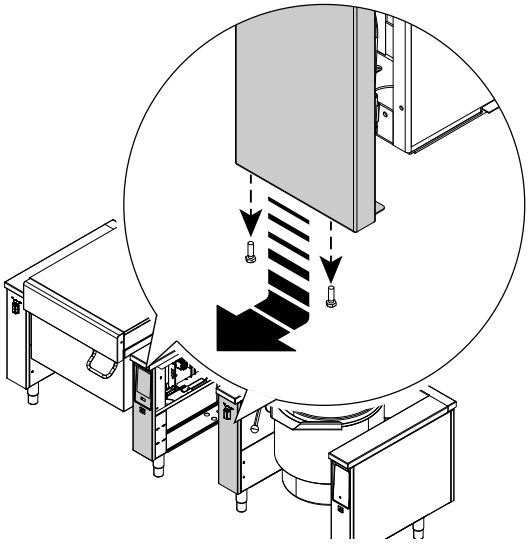

2. Unscrew the bolts and remove the covers.

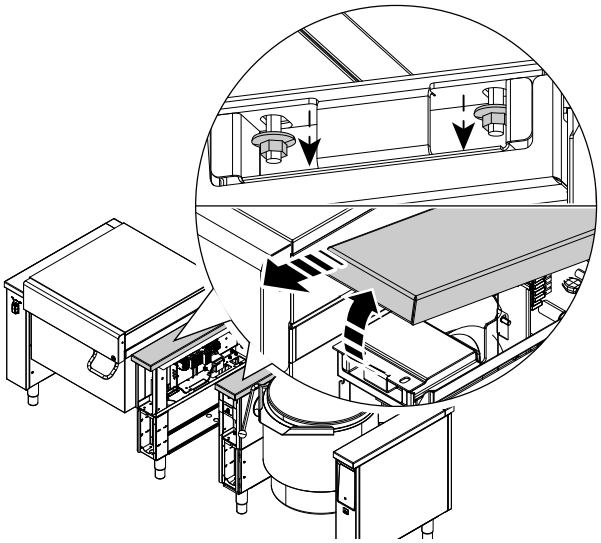

3. Push the units together. Bring the appliances to the same height, then level them.
   Replace the covers with the double cover required when placing the order, by screwing the bolts.

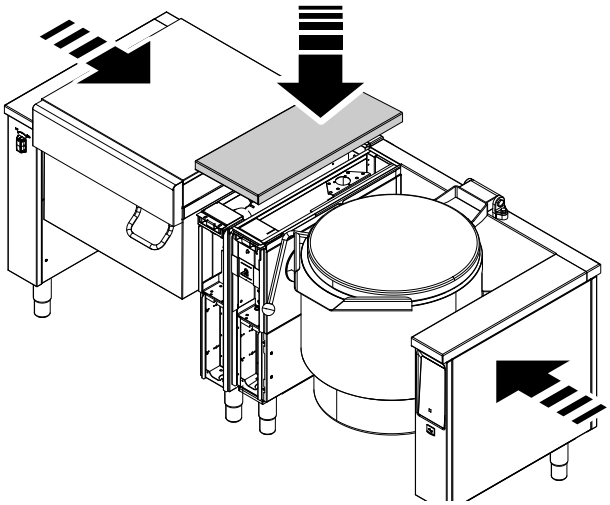

4. Reassemble the user interface panel and the front panel by fixing them with screws.

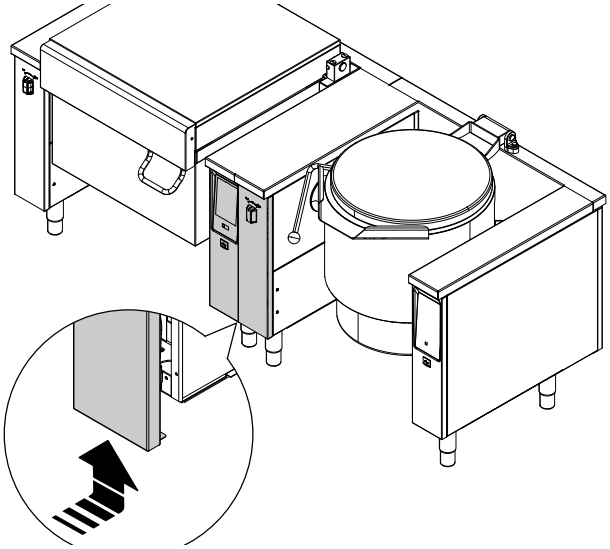

F.8 Sealing

For hygiene reasons, to prevent water and other substances from running under the appliance, seal all around the joints between the appliance and the wall with permanently elastic silicone.

NOTE!
Whenever a silicone seal must be destroyed for service and maintenance work, it must be replaced with a permanently elastic silicone.

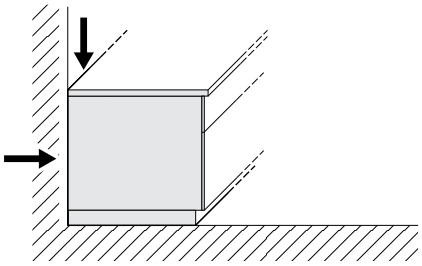

G ELECTRICAL INSTALLATION

WARNING
Refer to "*WARNING AND SAFETY INFORMATION*".

G.1 Mains connection

WARNING
Refer to A.11 *Electrical connection*.

Each appliance has a specific wiring diagram. It contains the technical specifications (electrical rating, voltage, amperage etc.).

The electrical wiring diagram is located on the top inside of the right panel of each appliance.

The Installation and Connection Diagram () shows the position of the main terminal board.

It must be possible to block the system in an open position for maintenance purposes, to prevent it from being switched on unintentionally.

Install ahead of the appliance an omnipolar switch of suitable capacity with contact opening distance of at least 3 mm. Install the switch in the building's electrical system, in the immediate vicinity of the appliance.

The mains supply is connected via cable installed during assembly, which protrudes approximately 1,5 m out of the floor or wall.

In case of marine installations: the fluctuation of the voltage must not be higher than ±6 %.

Connect the appliance to an efficient earthing system. For that purpose, the connection terminal block has a terminal with the symbol ⏚ for connecting the earth wire.

The interface for power optimization is in compliance with DIN 18875.

IMPORTANT

- The appliance can't be operated in case of power failure.
- The appliance must be electrically grounded in accordance with local codes, or in the absence of local codes, with the National Electrical Code, ANSI / NFPA 70, or the Canadian Electrical code CSA C22.2, as applicable.

G.2 Power cable

Unless otherwise specified, our appliances are not equipped with a power cable. The installer must use a flexible cable having characteristics not lower than the H05RN-F rubber insulated type.

Connect the AC power cord to the main terminal board using a cable relief, in accordance with the electrical wiring diagram.

G.3 Potential equalisation

The appliance must be connected to a point indicated on a potential equalisation system with a minimum conductor cross section of 10 mm².

When installing multiple appliances, connect them all together through potential equalisation.

1. 6 mm lug
2. M6 nut
3. M6 threaded bolt
4. M6 spring washer
5. M6 washers

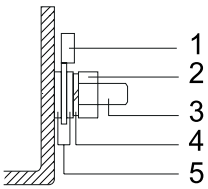

NOTE!
When connecting potential-free contact and energy optimizer it is possible that there is external voltage at the terminals.

H GAS INSTALLATION

WARNING
Refer to "*WARNING AND SAFETY INFORMATION*".

H.1 Mains connection

The following regulations must be obeyed when installing testing and adjusting the equipment:

- The legal regulations in force;
- In absence of local codes, the installation must be confirm with the National Fuel Gas code, ANSI Z223.1 / NFPA 54, or the Natural Gas and Propane Installation Code, CSA B149.1, as applicable, including
  - The appliance and its individual shutoff valve must be disconnected from the gas supply piping system during any pressure testing of that system at test pressures in excess of ½ psi (3.5 kPa)
  - The appliance must be isolated from the gas supply piping system by closing its individual manual shutoff valve during any pressure testing of the gas supply piping system a test pressures equal to or less than ½ psi (3.5 kPa).
- State building regulations and fire regulations;
- TRF "Technical regulations for liquid gas";
- Accident prevention regulations in force;
- Gas supply company conditions;
- SVGW guidelines;
- State and local regulations.

The appliance must not be installed on flammable walls; the installation area and the contact surface must be tiled or made of an equivalent material that is temperature resistant and thermally insulated.

If the appliance is set up next to temperaure-sensitive furniture or similar, a safety gap should be maintained; the paragraph E *INSTALLATION DIAGRAMS* shows the exact gap required.

WARNING

- No inflammable materials or fuels must be stored in the vicinity of the appliance.
- Kitchens and associated areas must be ventilated by ventilation equipment so that the ambient air is polluted as little as possible with unpleasant odours, gaseous combustion products (such as exhaust gas).
- Ventilation systems must not be covered with anything.
- Do not obstruct the flow of combustion.
- Assure adequate clearance for air openings into the combustion chamber.
- Gas feed parts (such as screwed-on gas pipes) on gas consuming devices must be so firmly sealed that under test conditions specific leak rates are not exceeded.
- Only sealing material that has been approved by the relevant test centres for use with all types of gas must be used.
- Clean dust, dirt and deposits that could prevent the gas supply flow from the connection pipes; we recommend that a dirt filter is installed in the gas pipe at the customer's.

- The gas supply line must ensure the gas flow necessary for full operation of all the appliances connected to the system.
  A supply line with insufficient flow will affect correct operation of the appliances connected to it.
- If the gas feed pipe (flow, diameter, etc.) and/or upstream gas valve are not designed correctly this may adversely affect the gas combustion by the burner system and the operation and operational safety of the appliance; considerable risk of misuse;

When the unit is delivered, it is already set to the gas type specified when ordering; the pressure and gas type are indicated on the data plate.

Compare the information on the data plate with the gas data of the installation location.

H.2 Conversion to another type of gas

Nozzle table (spare parts catalogue or service manual) gives the type of nozzles to be used when replacing those installed by the manufacturer (the number is engraved on the nozzle body).

At the end of the procedure, carry out the following check-list:

1. burner nozzle/s replacement
2. correct adjustment of primary air supply to burner/s
3. pilot nozzle/s replacement
4. minimum flame screw/s replacement
5. correct adjustment pilot/s if necessary
6. correct adjustment of supply pressure (see technical data/ gas nozzles table)
7. apply sticker (supplied) with data of new gas type used
8. check if the date of the changing is visible

H.3 Fume exhaust

The appliances are all type A1.

We never use direct exhaust gas flues that need connecting to a system; hence there is no need for a category B type flue. However, if a category B flue is expressly requested, this type of connection requires its own certification.

Combustion air and combustion products are extracted in the installation area.

According to the definition of Technical Installation Regulations DVGW G631: March 2012, these appliances have to be positioned under an extraction hood to ensure removal of fumes and steam produced by cooking.

IMPORTANT

- If the overall output of all appliances in the room exceeds 14 kW, in addition to the shut-off and safety devices required by DVGW G600, the exhaust flue must be fitted with a monitoring system. This means that the gas can only be released to the burners if it is released because the ventilation system is in use.
- You must also ensure combustion air is supplied when the total load exceeds 14 kW. In spaces without openings to the outside, there must be an air-conditioning system in accordance with VDI 2052 to ensure pressure between the kitchen and adjacent rooms is equalized.

CAUTION

- Never block the extractor;
- Never apply structural changes or modifications to the chimney.

H.4 Before connecting

Make sure the appliance is arranged for the type of gas to be used.

Otherwise, carefully follow the instructions given in the paragraph H.2 *Conversion to another type of gas*.

1. Remove the plastic protector from the appliance gas connection before connecting to the gas pipe.
2. Fit a rapid gas shut-off valve ahead of each appliance.
3. Install the tap/valve in an easily accessed place.

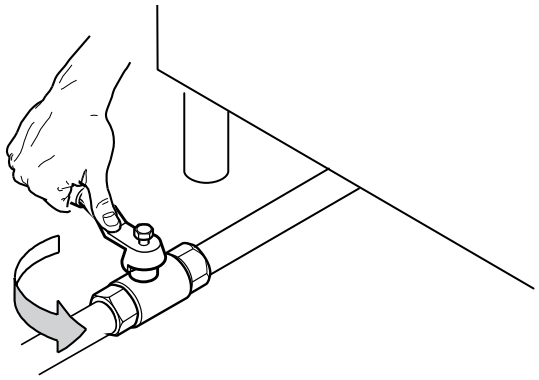

4. Clean the pipes to remove any dust, dirt or foreign matter which could block the supply.

H.5 Gas connection

H.5.1 Connecting to the gas supply

The appliance requires a 1″ gas pipe with shut-off valve on-site; the appliance's gas supply is 3/4″. See the nozzle table (spare parts catalogue / service manual) for the relevant gas volumes.

Connect the gas supply in accordance with the paragraph .

To get access to the gas pipes, follow the instructions in paragraph E.5 *Accessing the appliance's internal components*.

H.5.2 Gas connection for floor and wall appliances

IMPORTANT
Gas connection must be carried out only by specialized personnel.

1. First remove the user interface panel and the inspection panel on the right as described in E.5 *Accessing the appliance's internal components* (refer to paragraph K.2 *Appliance overview*).
2. Install a shut-off valve **A** on the gas pipe **G** protruding from the floor.
3. Connect the flexible metal hose **H** (for wall-mounted appliances, it hang out of the console at the bottom) with the threaded socket **F**, the elbow pipe **E**, the screw connection gas valves **D**, the gas valve **C** as well as the screw connection **B** to the gas pipe **G** trough the shut-off valve

After connection the inspection panel and user interface panel must be fitted properly again.

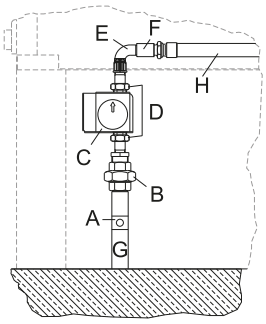

Floor-mounted appliances

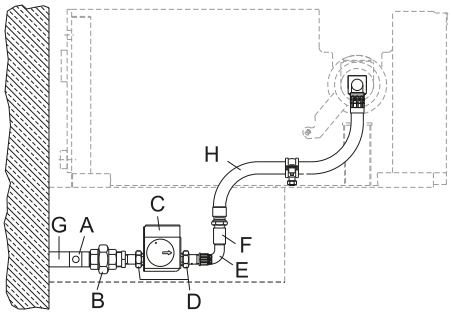

Wall-mounted appliances

H.5.3 Sealing

The screws on the gas lines must be sealed with suitable sealing material. Recommended sealing material for gas-supplying parts:

- Loctite 577 for all connections except nozzles;
- Loctite 511 for nozzles;
- Sealing tape for gas threaded screws;

We recommend to install a dirt trap filter in the gas pipe.

After connection, all lines carrying gas must be tested for leaks at operating pressure by painting with non-corrosive foam-forming media.

Before first use, bleed the gas pipe using the pressure gauge nipple in the main gas pipe.

H.5.4 Check the gas supply pressure

Make sure the appliance is suitable for the type of gas available, according to that given on the data plate (otherwise, follow the instructions given in the paragraph H.2 *Conversion to another type of gas*).

The supply pressure must be measured while the appliance operates, using a manometer (min. 0,1 mbar).

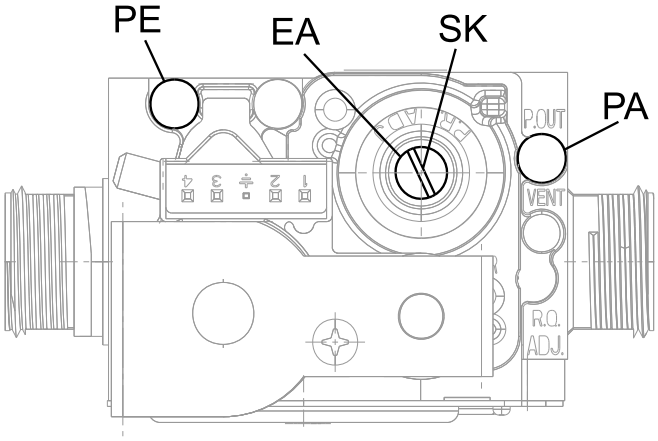

1. Turn off the main gas and upstream stop tap at the location;
2. For floor-mounted appliances remove the user interface panel and the inspection panel on the right.
   For wall-mounted appliances remove the bottom cover and the inspection panel on the right.
3. Measuring and testing inlet pressure by plugging the manometer into the pressure measurement fitting **PE**.
4. Measuring and testing operating pressure by plugging the manometer into the pressure measurement fitting **PA**.

NOTE!
The pressure measurement fittings open approximately two rotations counterclockwise.

The pressure gauge is connected by inserting a flexible pipe into the required pressure measurement fitting (**PE**/**PA**).

5. Open the shut off valve completely and switch on the appliance;
6. Check whether the specified permissible connection pressure range applies;
7. Remove the protection **SK** and adjust the working pressure using a pressure adjustment screw **EA**.
   Reassembled the protection **SK** after adjustment.
8. When the measurements are complete, close the pressure measurement ports **PA/PE** by turning clockwise.
   Re-assemble in reverse order.

Permissible tolerances for gas pressure in mbars:

Type of gas	INLET PRESSURES			OUTLET PRESSURES (MANIFOLD PRESSURE)
	Normal pressure	Minimum pressure	Maximum pressure	
Natural gas	17.4	8.7	26.1	10
Propane	27.4	19.9	32.3	20/25

If the manometer gives a reading outside the range of values in the table, do not switch the appliance on.

Consult the gas company.

H.5.5 Adjusting the gas flow speed on ignition

Turn the adjusting screw / regulator **ES** to adjust the gas flow rate during the ignition process.

A "slow ignition", i.e. the slow formation of flame during ignition, can be adjusted as desired.

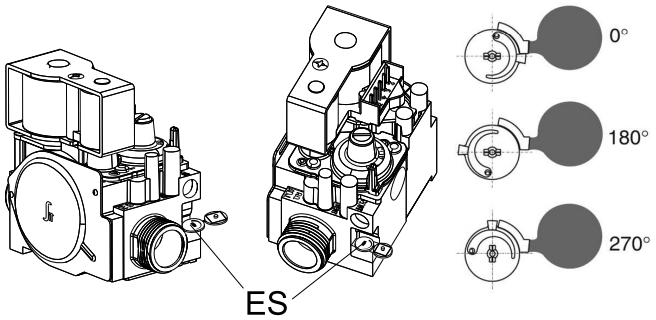

H.6 Safety thermostat

When a predetermined safety temperature is exceeded, the safety thermostat automatically activates and interrupts the gas supply.

IMPORTANT
Only authorised technicians should reset the thermostat. Any alteration to the safety thermostat shall void the warranty.

You can access the thermostat as described in E.5 *Accessing the appliance's internal components*.

Wait until the appliance cools down and press the red button on the safety thermostat.

I CONNECTING THE WATER SUPPLY

I.1 Water connection

IMPORTANT
- Carry out the water connection by referring to paragraph A.12 *Water connection*.
- If the water pressure is higher than that specified, use a pressure reducer to avoid damaging the appliance.

For correct installation, the water inlet pipe must be connected to the mains using a mechanical filter and a shutoff valve.

Before connecting the filter, allow a certain amount of water to run in order to clear the pipe of any waste matter.

Connect the appliance with water that has:
- chloride concentration less than 20 ppm. A higher concentration of chlorides can induce localized oxidation phenomena (not covered by warranty);
- hardness between 5 and 25 °fH. Hardness below 5 °fH makes the water undrinkable and hardness above 25 °fH generates limescale deposits that require frequent descaling cycles.

In case the water quality is out of the value ranges reported above, it is advisable to install some water treatment systems.

I.2 Backflow protection

A backflow protection device is required to protect each incoming water connection.

IMPORTANT
Install a single check valve, supplied with the appliance, on the water connection pipe.

I.3 Drinking water supply

The appliance should be connected to fixed lines.

The water connections can be floor or wall mounted, depending on the type of appliance required.

IMPORTANT
Gain always access to the pipes in accordance with E.4 *Installation and connection diagram*.

1. Feed the hoses through the relevant holes in the base or in the back of the appliance frame.
2. Remove the front panel and left inspection panel, refer to paragraph K.2 *Appliance overview*.
3. Connect the flexible hoses with a G 1/2" female thread with a shut-off valve installed, to the water pipes protruding from the floor or from the wall.
4. Then, re-apply the inspection panel and the front panel.

I.4 Mixing tap

Install the mixing tap on the left cover, depending on the model.

Model 1:

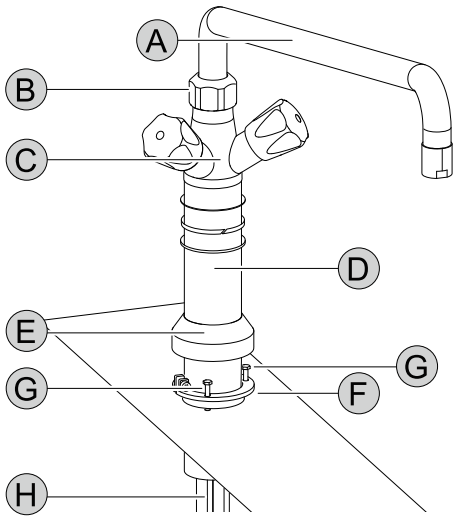

A. Swivel arm
B. Nut
C. Tap body
D. Stand pipe
E. Collar
F. Clamping collar
G. Allen head screw
H. Copper pipes

Installation:

1. Thread the copper pipes **H** and the stand pipe **D** through the pre-drilled hole on the left cover.
2. Place the support **D** and screw it onto the clamping collar **F** using an allen head screw **G**.
3. Push the collar **E** over the clamping collar **F** and down onto the cover.
4. Fit the swivel arm **A** onto the tap body **C** with the nut **B**.

Model 2:

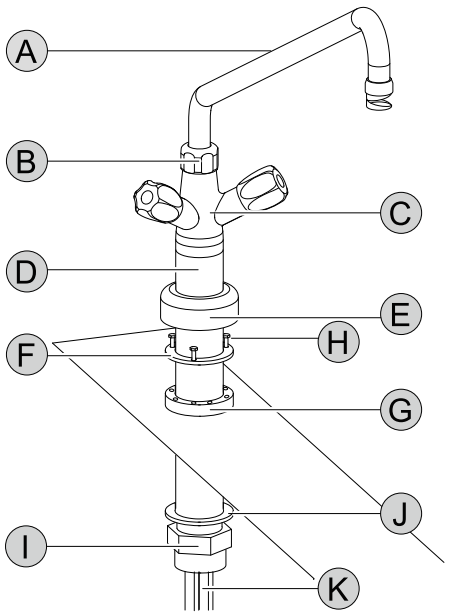

A. Swivel arm
B. Nut
C. Tap body
D. Stand pipe
E. Collar
F. Fixing ring

G. Clamping collar
H. Allen head screws
I. Fixing nut
J. Gasket
K. Copper pipes

Installation:

1. Fasten the clamping collar **G** with the fixing nut **I** and gasket below **J** on the pre-drilled hole of the left cover.
2. Thread the copper pipes **K** and the stand pipe **D** through the clamping collar **G**.
3. Place the stand pipe **D** and screw the fixing ring **F** onto the clamping collar **G** using the three allen head screws **H**.
4. Push the collar **E** over the clamping collar **G** and down onto the cover.
5. Fit the swivel arm **A** onto the tap body **C** with the nut **B**.

NOTE!
In case of tilting appliances gently bend the two copper pipes one to the right and one to the left of the tilting motor to allow free movement of it.

I.5 Water filling automatic

The automatic water filling system, if available on your model, fills up the appliance with a volume of water set by means of the touch panel, refer to L.3.5.4 *Water filling automatic*.

If this option is present, one tap knob is dedicated to automatic water filling and the other is for manual water flow.

You can have an automatic filling of cold water only, or an automatic filling of hot and cold water.

IMPORTANT
Remember that if you want to use the automatic filling function (using the touch panel), the dedicated knob, if present, must be open, otherwise the water cannot flow.

With cold only water filling option:

- The knob dedicated to automatic filling is the **blue** one.
- Through the red knob, you can manually run hot water.

With hot or cold water filling option:

- The knob dedicated to automatic filling is the **red** one.
- If the red knob is open, you can select automatic hot or cold water filling by means of the touch panel.
- Through the blue knob, you can manually run only cold water.

J NORMAL APPLIANCE USE

J.1 Characteristics of personnel enabled to operate on the appliance

The Customer must make sure the personnel for normal appliance use are adequately trained and skilled in their duties.

The operator must:

- read and understand the manual;
- receive adequate training and instruction for their duties in order to operate safely;
- receive specific training for correct appliance use.

IMPORTANT
The Customer must make sure his personnel have understood the instructions received and in particular those regarding work hygiene and safety in use of the appliance.

J.2 Basic requirements for appliance use

- Knowledge of the technology and specific experience in operating the appliance.
- Adequate general basic education and technical knowledge for reading and understanding the contents of the manual, including correct interpretation of the drawings, signs and pictograms.
- Sufficient technical knowledge for safely performing his duties as specified in the manual.
- Knowledge of the regulations on work hygiene and safety.

K PRODUCT DESCRIPTION

K.1 Use

The appliance is intended for industrial use by trained personnel.

This appliance must only be used for its expressly designed purpose, i.e. for cooking, braising, browning, pressure cooking, boiling, stewing.

Any other use is considered improper.

IMPORTANT
For the “boiling cooking“ fill the appliance with food for at least 40 mm [1,57″], otherwise it could burn. If the filling level is less than 40 mm, deviations in the temperature display may occur. With a lower fill level activate the “Soft cooking“ function, refer to paragraph L.3.5.3 *Soft cooking*.

The appliance is GN compliant and can be equipped with size 1/1 GN containers.

WARNING
Stand back when you open the lid or the steam outlet, because hot steam could pour out.

CAUTION
Do not switch on the appliance when it is empty.

NOTE!
The temperatures required for the cooking processes give rise to intense overheating of some components.
This is not due to a design fault, but is a consequence of the thermal conductivity of stainless steel.

The maximum filling level must not exceed the relevant marking, i. e. not more than 40 mm / 1,57″ below the upper edge of the pan.

Refer to A.4 *ProThermetic general safety*.

K.2 Appliance overview

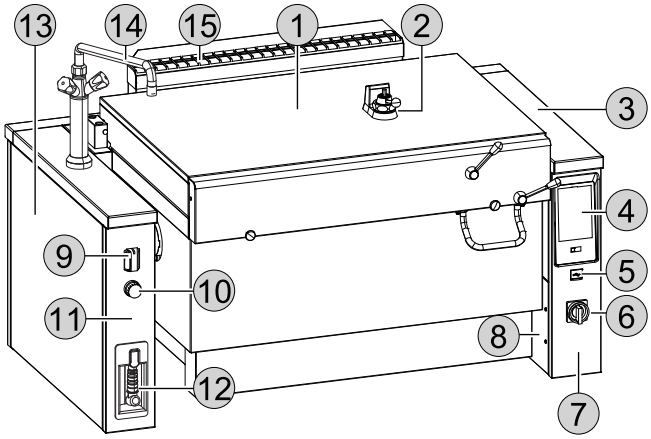

1. Pressure lid
2. Safety valve
3. Cover
4. Touch control panel
5. USB connection
6. Main switch (if available in your model)
7. User interface panel
8. Inspection panel
9. Knob for tilting function
10. Emergency stop (if available in your model)
11. Front panel
12. Spray gun (optional)
13. Side panel
14. Mixing tap / Swiveling arm (if available in your model)
15. Flue for combustion gases

K.3 Control panel

A. Display – Touch screen
B. ON/OFF button
C. USB pendrive in/out

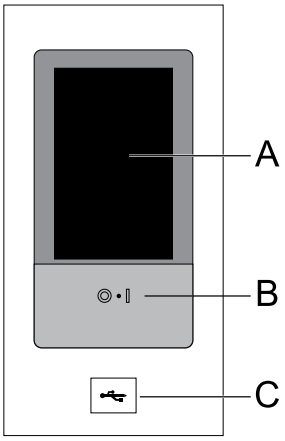

K.4 Emergency stop (optional)

Refer to the paragraph K.2 *Appliance overview*.

If present, press emergency stop button to stop the appliance operation immediately.

The entire touch control panel is switched off.

To unlock the emergency stop button turn the switch knob clockwise.

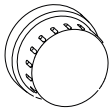

L OPERATING INSTRUCTIONS

L.1 First use

All the appliances are tested in terms of safety and functionality when delivered.

Prior to start operating with the unit, carry out the commissioning according to the specific checklist (refer to “Commissioning Checklist“).

- Clean off any industrial protection grease from all parts of the appliance and accessories before first use.
- To properly perform basic cleaning, note and follow the instructions in M *Appliance cleaning and maintenance*.
- Before first use, heat the appliance at 160°C / 320°F for 30 minutes. Then allow it to cool completely with the lid open.
- Do not use vegetable oil or fat to treat the pan.
- If present, dismantle the drain tap unit, clean thoroughly with a hot mild cleaning agent, dry and grease lightly with a special odourless, tasteless, food-safe tap grease.

L.2 Switching on/off

Press the proper button:

▯	To switch on the appliance
◎	To switch off the appliance

NOTE!
If present, switch off the appliance completely using the main switch (optional) and all of the displays become inactive.
Refer to the paragraph K.2 *Appliance overview*.

L.3 Touch control panel

L.3.1 Starting page

When the appliance is switched on the display illuminates, loads the software and after a while shows, by default, the starting page in “Manual“ mode.

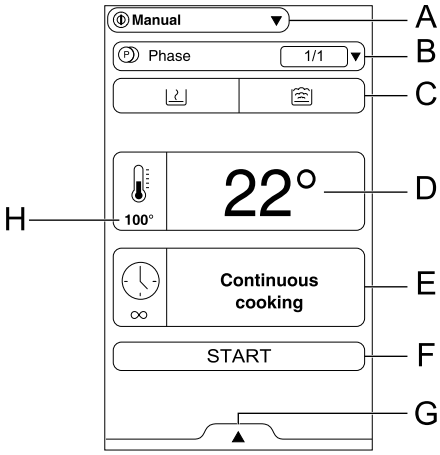

A. Main menu
B. Cooking phase
C. Cooking mode
D. Internal temperature
E. Cooking time
F. Start button
G. Additional functions
H. Set temperature

L.3.2 Main menu

The appliance allows cooking in different cooking modes, store and recall programs.

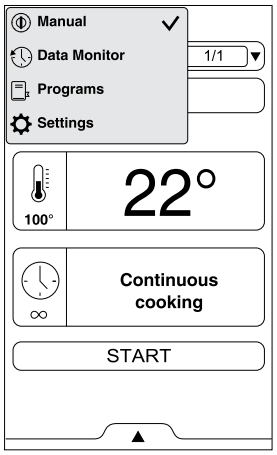

The manual mode customizes the cooking cycles setting the time and temperature or heat power (refer to L.3.3 *Manual mode* chapter).

"Data monitor" includes only information for Customer Care Service.

Programs mode recalls the recipes previously saved and restores quickly parameters and settings of each cooking cycle avoiding the need to assign them again (see L.3.6 *Programs mode* chapter).

Settings mode allows to customize the appliance functions and options for a better use (refer to L.3.9 *Settings* chapter).

L.3.3 Manual mode

Choose the cooking mode:

Braising cooking Boiling cooking

L.3.3.1 Set the required temperature in °C/°F

1. Touch symbol of the temperature value ;
2. Enter the new value on the numeric keypad appearing on the display;
3. Touch the symbol to set the temperature value, or wait for the window to close by itself.

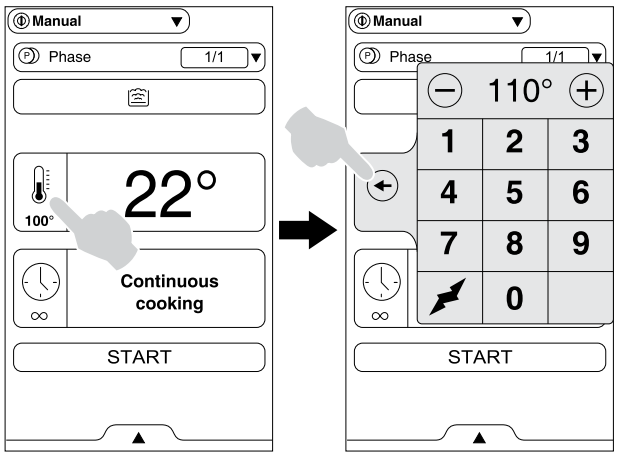

NOTE!
You can choose the temperature between 25°C / 77°F and 250°C / 482°F.

L.3.3.2 Set the power levels (where available)

1. Touch symbol of the temperature value ;
2. Touch the symbol of power level on the numeric keypad appearing on the display;
3. Set the power level from 1 to 9: 1 is the minimum and 9 is the maximum;
4. Touch the symbol to set the power level.

IMPORTANT

When the cycle starts, the symbol flashes until the set temperature is reached. Then the symbol disappears and the cooking time starts.

L.3.3.3 Set the duration time

1. Touch the symbol of the time value ;
2. Enter the new value on the numeric keypad appearing on the display;
3. Touch the symbol to set the duration time.

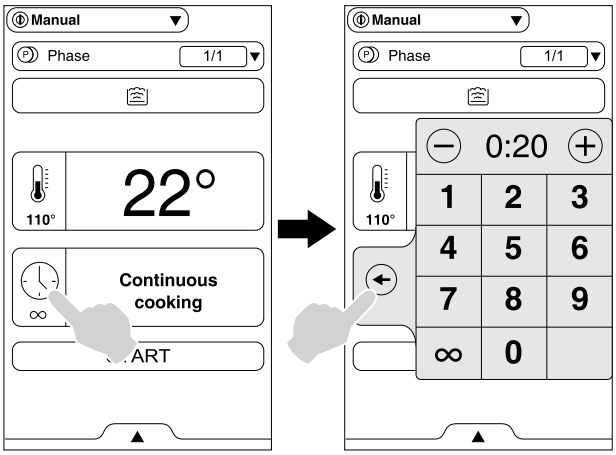

NOTE!
You can also set a continuous cooking by touching the symbol ∞ and then .

L.3.3.4 Add one or more cooking phases

1. Touch the symbol ▼ to open the phases menu;
2. Add a new phase by tapping the appropriate button;
3. Set temperature and duration as explained in previous paragraphs;

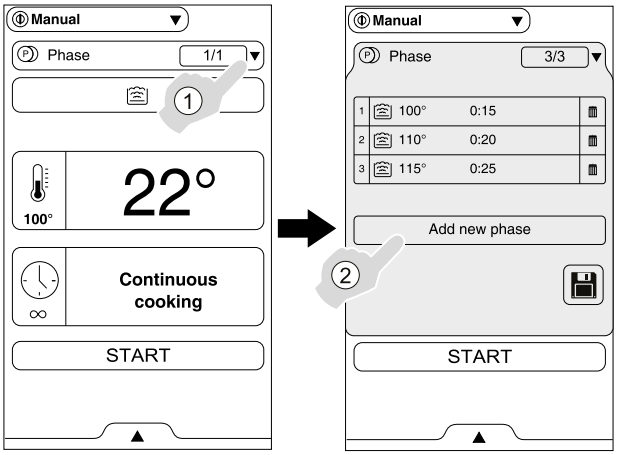

NOTE!
To store the phase sequence in a program, tap the symbol and refer to paragraph L.3.5 *Additional functions*.

L.3.4 Drawer area

The drawer is an expansion located inside several environments of the menu and includes options and functions.

The lower drawer contains further settings, accessory management and advanced features. Its composition depends on the setting parameters and on the phase cycle.

Touch ▲ to open the lower drawer and ▼ to close it.

L.3.5 Additional functions

Touch ▲ to open the lower drawer.

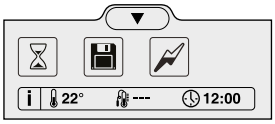

L.3.5.1 Delay start

With this option it will be possible to delay the start of a cycle at a more convenient time.

1. Touch symbol of the delay start;
2. Set the starting time on the appearing keypad;
3. Confirm the delay start time by tapping the start button.

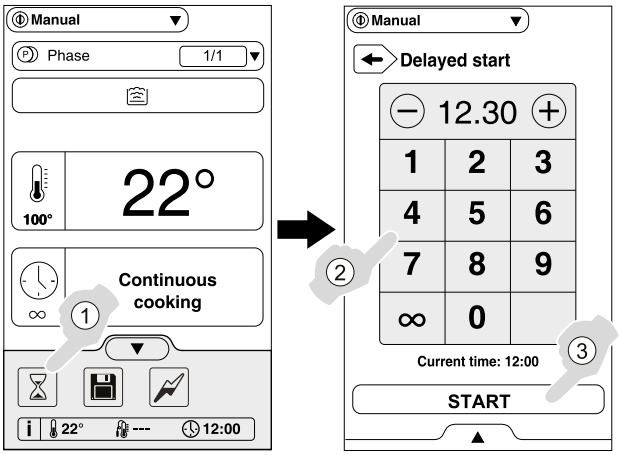

IMPORTANT
At the programmed time the appliance switches on and starts heating to reach the set temperature.

NOTE!

After selecting this function, the icon appears on the main screen.

L.3.5.2 Save program

To save and store customized cooking cycles.

1. In “Manual mode“ set the cooking parameters according to your requirement;
2. Open the lower drawer and touch the relevant icon to save the programme;
3. Edit the program name on the appearing keypad and confirm;
   The new program will be stored in “Programs mode“.

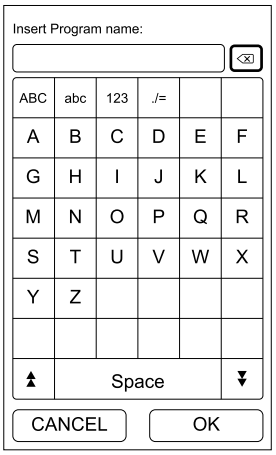

NOTE!
To access the “Programs mode“, refer to paragraph L.3.6 *Programs mode*.

L.3.5.3 Soft cooking

It reduces the power of the cooking cycle, by reaching the set temperature more slowly.

Recommended for delicate foods such as milk, or anything that can burn easily.

The soft cooking function is always arranged in the boiling mode. When the braising cooking mode is available, the function can be activated below 120°C.

1. Touch symbol of the soft cooking;
2. Touch ▼ to close the lower drawer;
3. Start the cycle.

NOTE!

After selecting this function, the icon appears on the main screen.

L.3.5.4 Water filling automatic

If the appliance has the water filling automatic, the proper icons appear in the drawer area.

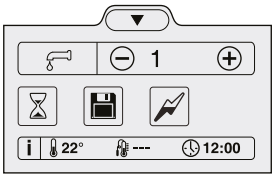

To operate the water filling automatic:

1. Touch ▲ to open the lower drawer;
2. Set the water litres by tapping ⊕ or ⊖.
3. Touch the icon to start water filling.

NOTE!
With hot or cold water filling option you have to choose whether to fill with hot or cold water by touching the red or blue symbol.

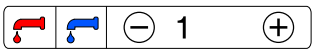

4. Touch ▼ to close the lower drawer;

IMPORTANT
Remember to open the knob for automatic water filling, otherwise the water cannot flow, refer to the paragraph I.5 *Water filling automatic*.

L.3.5.5 Pressure cooking options

NOTE!
Pressure cooking can only take place if the lid is hermetically closed and there is enough water inside, which generates the necessary amount of steam to create enough pressure. Refer to paragraph L.5 *Pressure cooking*.

With pressure appliances, the additional functions include two more options:

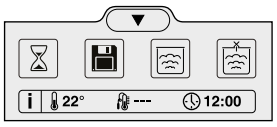

- **Pressure phase**

Reminds you that a pressure cooking phase is about to begin

A popup message appears, to remind you to add cooking fluid and close the lid tightly

After selecting this function, the icon appears on the main screen when a pressure phase starts.

- **Keep pressure**

It keeps the steam inside the appliance, avoiding a pressure reduction.

By default, the pressure is automatically reduced after a pressure cooking process, but it can be held inside the appliance by manually selecting this function.

In the case of multi-phase cooking, this option is only performed at the end of the last phase.

After selecting this function, the icon appears on the main screen.

L.3.5.6 Food core temperature probe

The core probe allows accurate control of the core temperature of the product being cooked. This option excludes the cooking time setting.

When the set value is reached, the heating stops automatically.

NOTE!
The maximum value is 99°C [210°F].

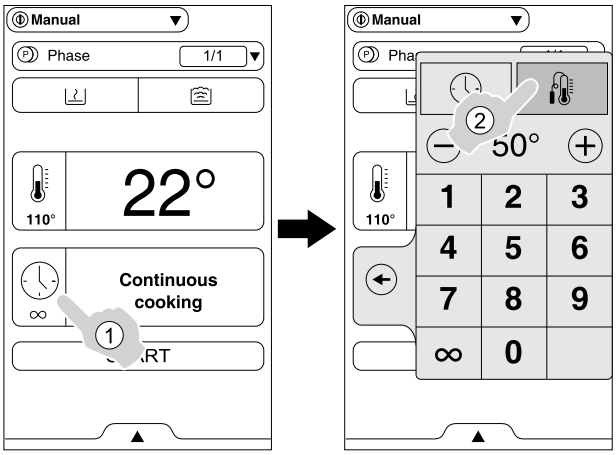

How to use the probe:

1. Touch the symbol of the time value ;
2. Touch the symbol of the probe ;
3. Enter the new value on the numeric keypad appearing on the display;
4. Touch the symbol to set the probe temperature value;
5. Remove the core probe from its seat and insert it in the product without forcing excessively;

IMPORTANT
Make sure the tip (the sensitive part) is positioned near the centre of the product.

It is important to place the core probe correctly near the centre of the product, making sure the tip does not protrude and, in particular, that it does not to touch the pan.

6. Close the lid and start the cycle.

NOTE!

When the cycle starts, the symbol flashes until the set temperature is reached. Then the symbol disappears and the cooking time starts.

CAUTION
The core probe is a precision component. Absolutely avoid impacts, forcing when inserting, and pulling of the flexible cable. The warranty does not cover the replacement of core probes damaged by improper use.

L.3.6 Programs mode

The “Programs Mode“ allows to recall program recipes already stored or to upload/download programs, from or into the appliance by means of the USB pendrive.

- **Choose a saved program:**
  1. Select “Programs mode“ in the main menu;

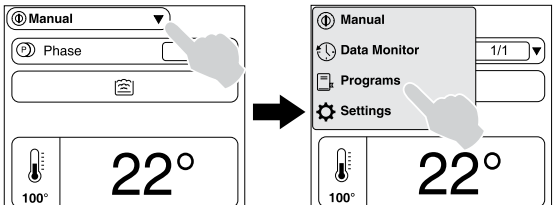

  2. Touch the required program or search it by typing its name near the icon ;

NOTE!
To delete a program touch the icon .

- **Download/upload programs:**
  1. To open the lower drawer touch ▲.
  2. Choose the icon to download programs, or the icon to upload programs.

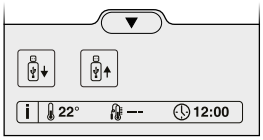

L.3.6.1 Guided cooking programs (if present, depending on your model)

They are preset programs that guide you during cooking cycles by means of hints and pop-ups.

- **Enable guided programs (only the first time):**
  1. After entering “Programs mode“ in the main menu, a pop up appears asking if you want to install the guided programs.

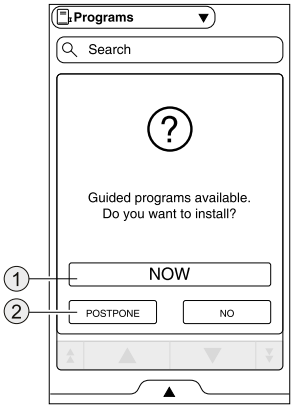

  2. Touch the proper icon if you want to proceed immediately ① or later ②.
     After installation, the display shows the preset guided programs.

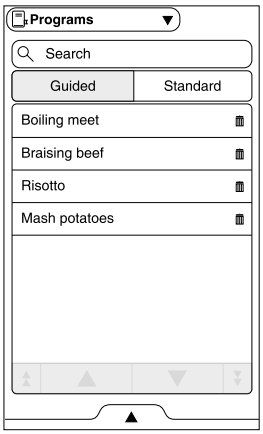

Now you can edit them, delete them, or make a copy.

NOTE!
To restore guided programs refer to paragraph L.3.9 *Settings*.

- **Choice of programs**
  1. Touch the required program or search it by typing its name near the icon .
  2. A pop-up comes up with a summary of main ingredients for that recipe and if a video is available, a QR code appears and when scanned allows direct access to the video.
  3. Confirm to start the cooking cycle.
- **Water filling automatic** (if present)
  With guided programs, there is the possibility to choose the number of litres of water to be loaded and to be guided in operations through pop-up messages.
  1. Touch ▲ to open the lower drawer before starting the program.
  2. Touch the icon to modify the number of litres of water to be loaded into the appliance in that cycle and confirm.
  3. Touch ▼ to close the lower drawer and start the program.

NOTE!
If you start a guided program as is, a pop-up appears asking if you want to modify the preset features, changing the amount of water to load.

L.3.7 Start a cooking cycle

When a cooking cycle begins, the appliance starts heating up to the set temperature.

If the preheating view is enabled (refer to L.3.9 *Settings*) and available for your model, the display shows the following screen:

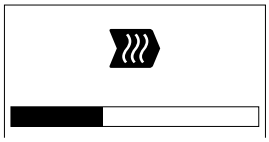

Then it is possible to introduce food.

The cooking time starts when the set temperature is reached.

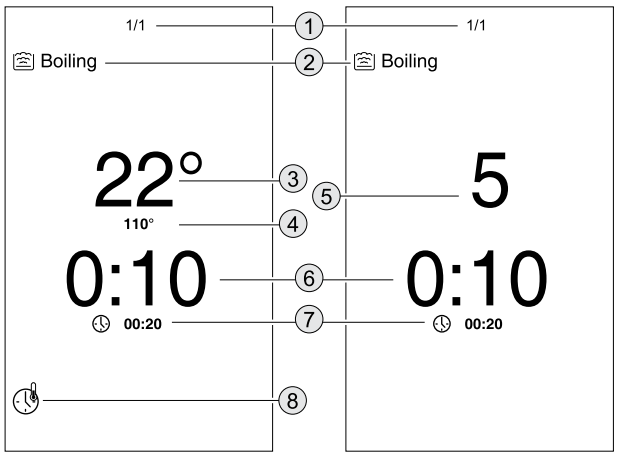

Set temperature ***Set power levels***

1. Current cooking phase number
2. Current cooking mode
3. Current food temperature
4. Set temperature
5. Set power level
6. Remaining time
7. Set cooking time
8. Icon present until the set temperature is reached

More options after starting a cycle

A. **To stop a cycle** before the set time:
touch on the display and then on the "**A**" button.

B. **To skip the current cooking phase**:
if the cycle has multiple phases, you can skip the current phase by touching on the display and then on ▶| icon.

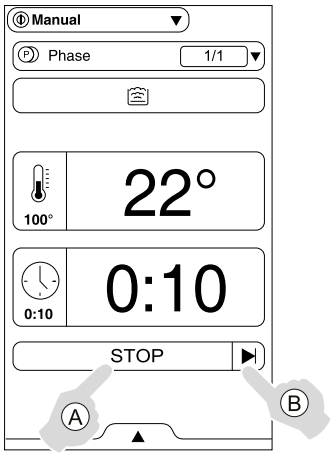

NOTE!
If **B** function is available for your model, enable it referring to L.3.9 *Settings* paragraph, otherwise:

1. Touch the symbol ▼ to open the phases menu;
2. Touch the symbol |◀ to skip the current phases.

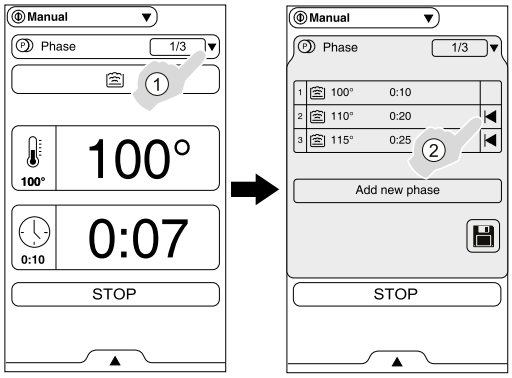

L.3.8 End cycle

When a cooking cycle ends, touch "OK".

L.3.9 Settings

"Settings" mode allows to change some usage parameters of the appliance.

1. Select "Settings" in the main menu;

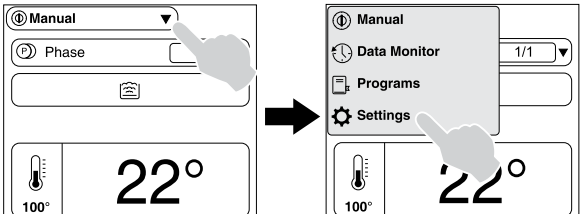

2. The display shows the main menu with settings:

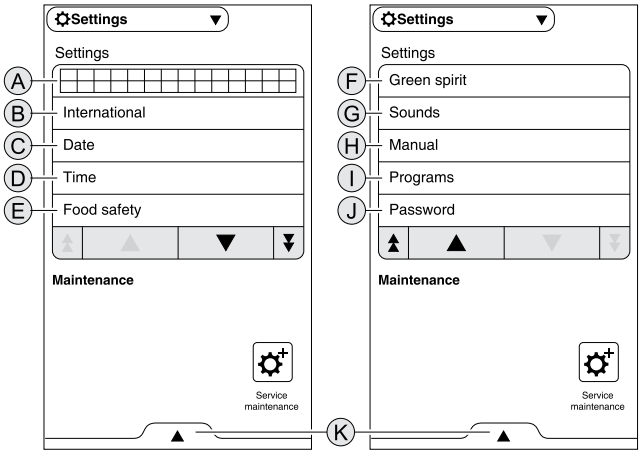

▼▲ scroll buttons

start/end buttons of scrolling

Service maintenance
This environment is only allowed to an authorized technician.

A. **Language**
This parameter allows to customize all menus in the selected language.
- Touch the strip with flags
- Scroll up or down to find the required language
- Touch to return to the “Settings“ menu.

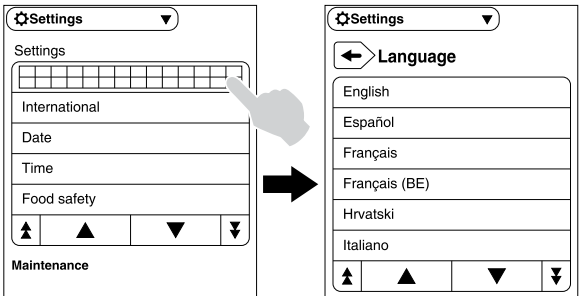

B. **General settings**
This function allows to set a lot of parameters:
- Language: refer to point “A“;
- Date format: DD/MM/YYYY etc.
- Time format: 24H / 12H;
- Temperature measure unit: °C / °F.
- Touch to return to the “Settings“ menu.

C. **Date**
This setting allows to set the current date.
- Set the date by tapping or .
- Touch to return to the “Settings“ menu.

D. **Time**
This setting allows to set the current time.
- Set the time by tapping or or by touching the corresponding number on the keypad.
- Touch to return to the “Settings“ menu.

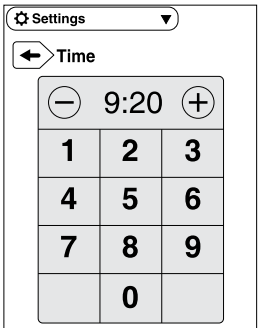

E. **Food safety**
The HACCP feature allows the storage of all the set values identifying a cooking process, and their variation, the cavity temperature and, when used, the food core temperature at specific intervals.

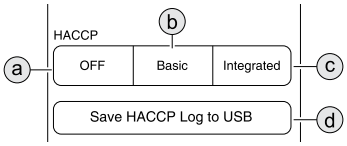

a. Enable / disable HACCP;
b. HACCP available with USB key;
c. HACCP available with integrated kit;
d. To save HACCP values in the USB key.

In “boiling“ mode it records the food temperature from the side sensor.

In “braising“ mode it records the temperature of the bottom plate.

F. **Green Spirit**
This setting allows to set after how many minutes (or seconds) the display enter in standby mode, or to disable the standby mode:
- Touch the arrow ▶ to open the menu;
- Tick the square to set the time for standby mode;
- Set the time and click on “OK“ to confirm.

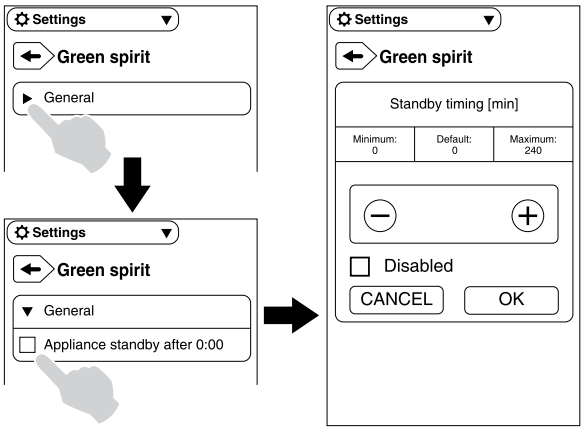

NOTE!
To turn on the display after standby mode, touch it anywhere.

G. **Sounds**
This setting allows to enable / disable sounds and to set the volume level.

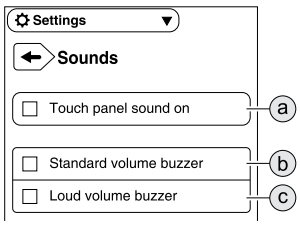

a. Enable / disable touch panel sounds
b. Standard volume
c. Loud volume

Touch to return to the “Settings“ menu.

H. **Manual**

This setting allows to enable / disable the manual cooking mode and its options:

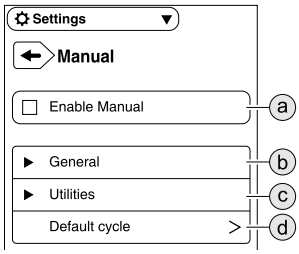

a. Enable / disable manual mode: if manual mode is disable, only saved programs are available.
b. General:
   - To show or hide real and set values;
   - To enable / disable cooking phases;
   - To enable / disable the delay start;
   - To enable / disable the preheating phase view;
   - To enable / disable phase skip on the start button.
c. Utilities: to show / hide the cooking information in the lower drawer.

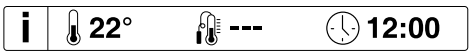

d. Default cycle: to set the cycle of the starting page.

Touch to return to the “Settings“ menu.

I. **Programs**

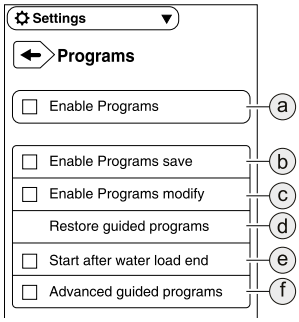

a. Enable / disable programs;
b. Enable / disable the possibility to save programs;
c. Enable / disable the possibility to modify programs;
d. To restore the guided cooking programs;
e. In the case of automatic water filling, you can enable / disable the cycle to start automatically once the amount of water has been loaded;
f. To enable/disable pop-ups for advanced functions or more specific steps in guided programs, such as a step to maintain the desired temperature at the conclusion of a guided program.

Touch to return to the “Settings“ menu.

J. **Password**

This setting allows to set, change or remove the password: if enabled, it prevents manual modification of some functions (for example by unintentional touches or unauthorized people).

K. **Additional setting**

Open the lower drawer and select the related icon:

Download/upload programs

Refer to L.3.6 *Programs mode*.

Default setting

If it is required to restore the factory setting, proceed as follows:

- Open the lower drawer and select the related icon;
- Confirm restoring to close the pop-up window.

Touch screen calibration

This setting allows to set the calibration of the screen.

- Touch the screen as close as possible to the centre of the red cross;
- Repeat until the cross turns green;
- Touch and hold to exit.

L.3.10 Alarm messages

Any errors or alarms and their brief description are shown on the display with the icon .

An acoustic signal is played simultaneously.

L.3.11 Preventive maintenance

If available for your model, an alert can be set, which informs you when it is time for maintenance based on the number of cooking cycles, hours the appliance has been in operation, or days/months passed. Refer to the Service Manual or contact Customer Care Service.

L.4 Connectivity kit

If the connectivity kit is present, connect the Ethernet cable and check in the touch panel settings that parameter no. 40 is set correctly, refer to the “Parameter Setting“ document.

First remove the user interface panel referring to E.5 *Accessing the appliance’s internal components*.

Then insert the Ethernet cable into the factory-fitted connector.

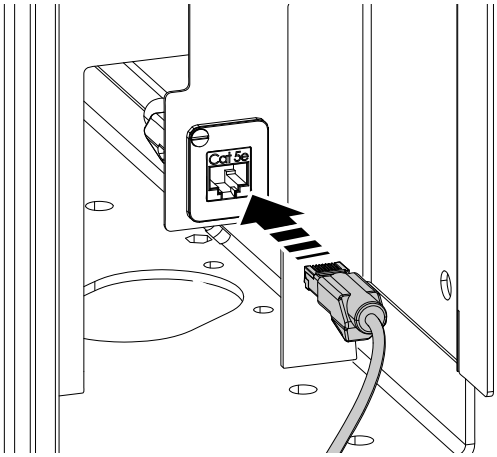

Fig. 1 Ethernet cable into connector

IMPORTANT
If the appliance has feet, insert the Ethernet cable through the cable gland already mounted:

1. Remove the cable gland from its position.

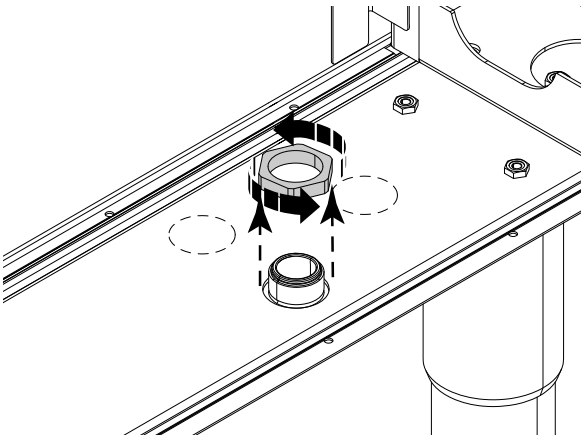

2. Place the Ethernet cable inside the cable gland.

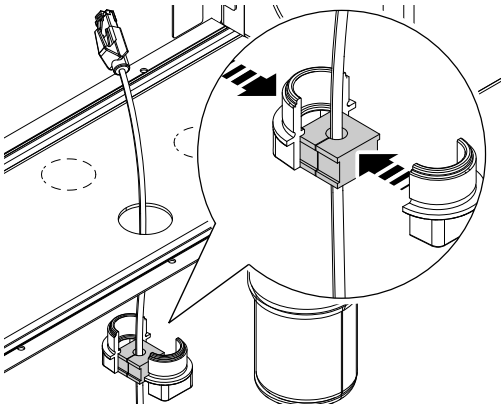

3. Reassemble the cable gland in its original position.

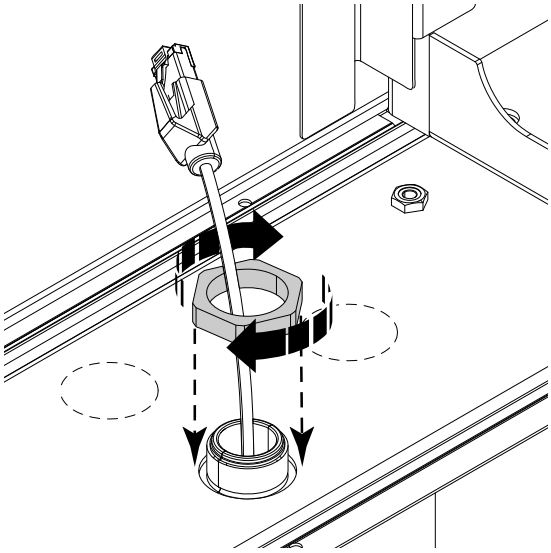

4. Insert the Ethernet cable into the factory-fitted connector, refer to Fig. 1 *Ethernet cable into connector*.
5. Remount the user interface panel.
6. Through the touch panel, enter in “Settings“ mode (referring to L.3.9 *Settings*) and tap on ⚙+.
7. Insert the password, refer to the Service Manual or “Parameter Settings“ document.
8. Click on “Appliance parameters“ and then scroll down until you reach parameter no. 40.

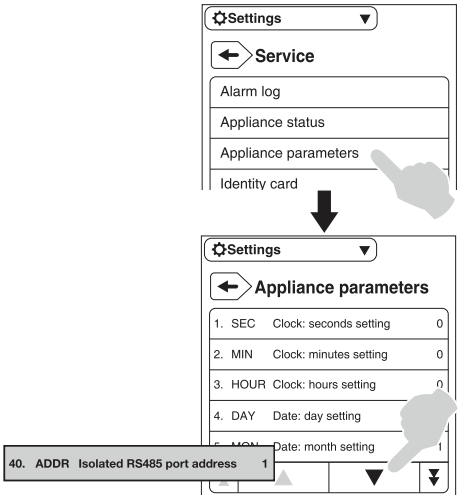

9. Set parameter no. 40 according to the "Parameter Setting" document.

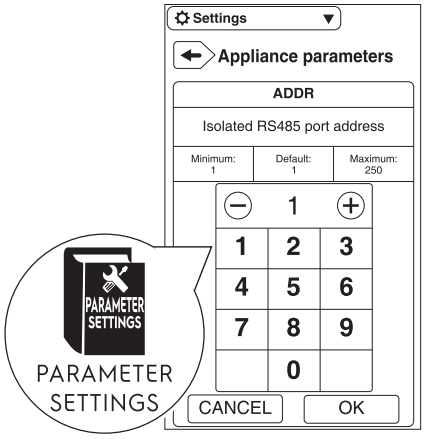

NOTE!
To check if all parameters are set correctly, refer to the “Parameter Settings“ document.

L.5 Pressure cooking

The appliance can be used for standard cooking, but it automatically switches to pressure cooking if the lid is hermetically closed and there is enough water inside, which generates the necessary amount of steam to create sufficient pressure.

Pressure lid closing

Before closing the lid:

- Move the unit to a horizontal position (if tilting model).
- Make sure the top edge of the pot and lid gasket are clean and free of food residue to prevent the gasket from sticking.
- Direct the swivel arm of the mixing tap forward (if present).
- Heat the cooking appliance and start the required cooking process with the lid open.
- Make sure that the closing lever **B** is positioned to the right.

Close the lid:

1. Move the lid towards the appliance using the handle **A** and holding it down, turn the closing lever **B** from the right (open position) to the left (closed position).
2. If the safety valve lever **C** is on the right or left, move it to the middle (closed) position.
3. Turn the operating lever for pressure release **E** to the left (in closed position).

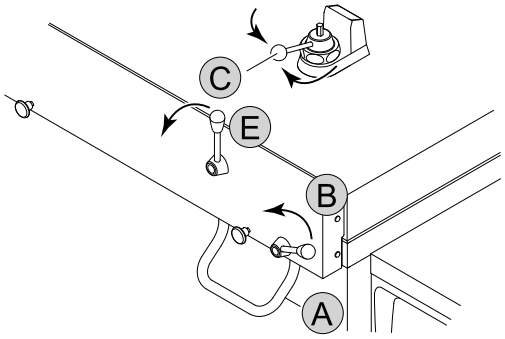

Pressure lid opening

WARNING
Before opening the lid make sure that there is no more pressure in the appliance.

- Turn off the energy supply to the appliance.

- By default, the pressure is automatically reduced after a pressure cooking process, but the safety valve on the lid can also be opened manually taking the appropriate care by turning the lever **C** from the closed position (in the middle) to the open position (left or right).
- Wait until no liquid, splash water or steam escapes through the safety valve on the lid and the pressure indicator **D** has dropped to its lowest position.

Open the lid:

1. Turn the operating lever for pressure release **E** upwards (in open position).
2. Hold the lid down using the handle **A** and turn the closing lever **B** from the left (closed position) to the right (open position).
3. Pull both locking catches **F** out at the same time.
4. Open the lid by holding it by the handle **A**.

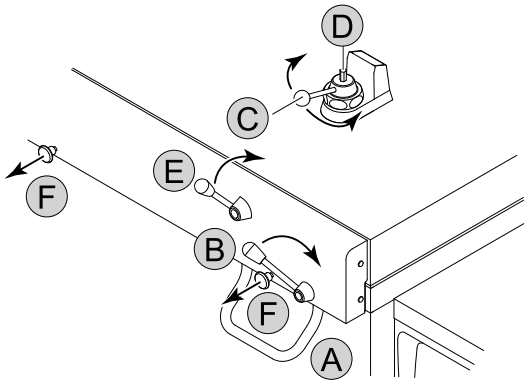

NOTE!
When using the appliance as a normal pan (cooking without pressure), place the lid on the pan without locking the closure.

When the appliance switches to pressure cooking, boiling mode is automatically selected and the temperature is set to 108°C [226°F].

If you are cooking in one of the standard cooking mode and want to add a pressure cooking phase at the end, refer to paragraph L.3.5.5 *Pressure cooking options*.

By default, the pressure is automatically reduced after a pressure cooking process, but the steam can be held inside the appliance by manually selecting the icon in the touch panel, refer to the paragraph L.3.5.5 *Pressure cooking options*.

L.6 Safety valve on the lid

WARNING
Refer to A.4 *ProThermetic general safety*.

The pressure lid is provided with a safety system that prevents opening under pressure.

The safety valve has a function of venting and limiting the pressure of the steam in the cooking chamber at a pressure of 20 mbars.

WARNING

- With an overpressure of 0.45 bar and above, discharge immediately the safety valve.
- Work on the safety valve may only be carried out when the pressure lid is open and therefore depressurised.

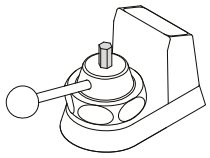

Cooking chamber without pressure

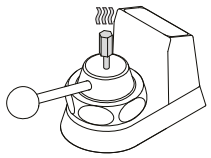

Cooking chamber with pressure

For cleaning instructions, please refer to paragraph *Cavity of lid safety valve*.

L.7 Drain tap

The drain tap (if present) is used to drain the cooked food with a specific dosage.

If the handle is on the left, the drain tap is closed, otherwise if it's on the right, the tap is open.

WARNING
In pressure appliances, never open the drain tap under pressure. Before operating the drain tap, open the lid to release pressure.
Keep your body in distance when opening the drain tap and emptying the appliance. We strongly recommend the use of safety gloves / safety clothes to avoid any risk of burning, refer to A.2 *Personal protection equipment*.

IMPORTANT
Do not remove the cover of the drain tap when emptying food / liquid.

L.7.1 Opening the drain tap

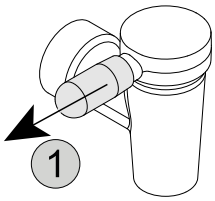

1. Hold the handle of the cover and pull it gently to unlock it.

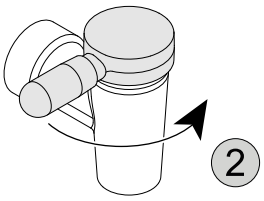

2. Turn the handle completely to the right.

To close the drain tap, turn the cover with the handle from the right to the left.

L.7.2 Dismounting the drain tap

Turn the drain tap counterclockwise and remove it.

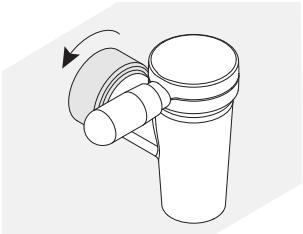

L.7.3 Dismounting the drain tap cover

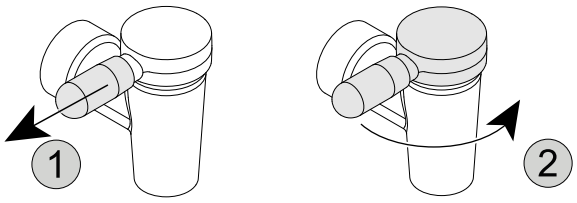

1. Hold the handle of the cover and pull it gently to unlock it.
2. Turn the handle completely to the right.

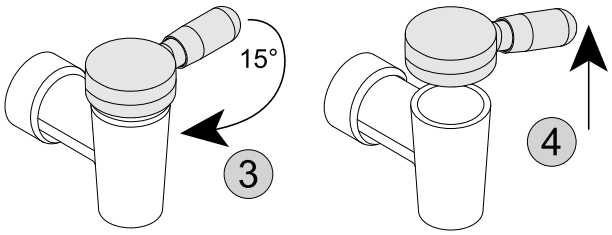

3. Turn again the handle a little to the left (about 15°).
4. Lift the cover of the drain tap with the handle.

To mount the drain tap cover proceed in reverse order.

L.8 Tilting the appliance

The appliance can be tilted over 90°.

Refer to the paragraph K.2 *Appliance overview*.

Before tilting the appliance, make sure that:

- The swivel arm of the mixing tap (if present) is facing forward;
- The lid is fully open;
- There are no people or objects in the tilting area underneath the appliance.

To tilt the appliance, turn the knob to the right.

The appliance tilts at a variable speed and continues until the knob is held in the tilting position (turned to the right).

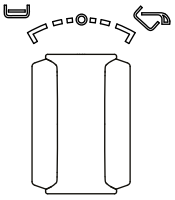

When you release the knob, it returns to the neutral middle position and the appliance remains tilted as it is. To bring it back to the horizontal position, turn the knob counterclockwise (left).

Select the tilting speed so that the food can drain out while remaining within the emptying area of the appliance.

NOTE!
During the tipping, the heating element is temporarily switched off.

WARNING
Keep your body in distance when tilting and emptying the appliance. We strongly recommend the use of safety gloves / safety clothes to avoid any risk of burning, refer to A.2 *Personal protection equipment*.

M APPLIANCE CLEANING AND MAINTENANCE

WARNING
Refer to "*WARNING AND SAFETY INFORMATION*".

M.1 Care information

Care operations have to be carried out by the owner and/or user of the appliance.

IMPORTANT
Problems resulting from poor or lack of care as hereinafter described will not be covered by the warranty.

M.2 Cleaning introduction

To help reduce environmental impact, we recommend using Electrolux Professional cleaning products designed with sustainability and biodegradability in mind.

If another type of detergent is used, carefully follow the producer's instructions and observe the safety rules given in the information sheets provided with the product or substance.

CAUTION

- Do not use solvent-based detergents (e. g. trichloro-ethylene) or abrasive powders for cleaning.
- Do not use steel brushes, steel wool, copper cloths, sand-based or similar products for cleaning.
- Only start cleaning once the appliance has cooled.
- Do not clean the appliance with flammable liquids.

Accessories such as baskets and containers, if present, must be cleaned outside of the appliance.

WARNING
When using chemicals, comply with the safety notes and dosage recommendations printed on the packaging. Refer to the chapter A.2 *Personal protection equipment* for handling chemical products.

M.3 Stainless steel surfaces

The reason stainless steel can resist corrosion and rust is its passive layer which builds up when oxygen hits the metal surface. There is sufficient oxygen in the air to do this.

If this passive layer is physically broken or damaged by chemical substances, leaving it unable to regenerate itself, even rust-free stainless steel can be subject to corrosion.

It is possible to develop or regenerate the passive layer by treating it with running, oxygen-rich water.

Oxygen-starving abrasives such as hydrochloric acid, chlorides and spice concentrates, mustard, vinegar essences, spice cubes and cooking salt solutions can lead to chemical damage or rupture of the passive layer, depending on the concentration and temperature.

Extraneous rust (iron particles), the formation of galvanic elements and lack of oxygen could cause more damage.

IMPORTANT
Keep stainless steel surfaces clean at all times and make sure they are well ventilated.

Please follow these instructions:

- Remove grime, fat and other cooking residuals from steel surfaces when cool using soapy water, with or without detergent, and a cloth or sponge.
  Dry the surfaces thoroughly after cleaning.
- In case of encrusted grime, fat or food residuals, go over with a cloth or sponge, wipe in the direction of the satin finish and rinse often.
  Rubbing in a circular motion combined with the particles of dirt on the cloth/sponge could spoil the steel's satin finish.
- Metal objects can spoil or damage the steel: damaged surfaces become dirty more easily and are more subject to corrosion.
- Restore the satin finish if necessary.
- Do not let stainless steel parts come into prolonged contact with acids, spices, salts, etc. Even acid fumes which build up from cleaning tiled surfaces can promote corrosion.
  Rinse off work surfaces with fresh water. This applies especially after cooking potatoes, pasta or rice in salted water.

M.4 Daily cleaning

CAUTION

- Do not use a high-pressure cleaner to clean the floor directly in front of, next to and behind the appliance.
- Cleaning of tilting appliances, depending on the model, have to be done in the horizontal position (not tilted) to avoid the entrance of water into the gas chamber.

Control panel

- Clean the control panel with a soft cloth dampened with water and, if necessary, with neutral detergent.

External surfaces

- Wash the external surfaces with warm, soapy water.
- Avoid using detergents containing abrasive substances, steel wool, brushes or steel scrapers.
- Rinse with a damp cloth and dry carefully.
- Avoid using chlorine or ammonia-based products.

Tank

- Remove any residuals of food, grime, fat, other cooking residuals and starch from the tank and baskets using boiled water on a daily basis adding a degreasing cleaning agent if necessary.
- Carefully dry the tank and baskets to avoid the stagnation of liquids.

Food probe, if present

- Clean the food probe using lukewarm water and dish detergent, avoiding tying the cable of the probe and rinsing with water.

Pressure lid, only for pressure models

- Thoroughly clean the lid bottom side and the gasket with lukewarm water and a micro-fiber cloth.
- **Lid bearing:**
  – Clean the casing and plackets of the bearing **BL** with a scraper and mild cleaning agent, rub dry and polish with metal polish if necessary.
  – Clean the gap between bearing and lid with a round sensitive bottle brush or a flat scraper and mild cleaning agent, flush with hot water and rub dry

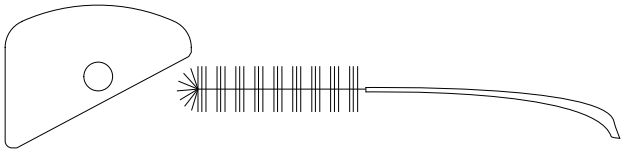

- **Pressure release connector PR:**
  – Unscrew cap.
  – Clean with a round sensitive bottle brush and mild cleaning agent, flush with hot water and rub dry.
  – Rescrew cap.

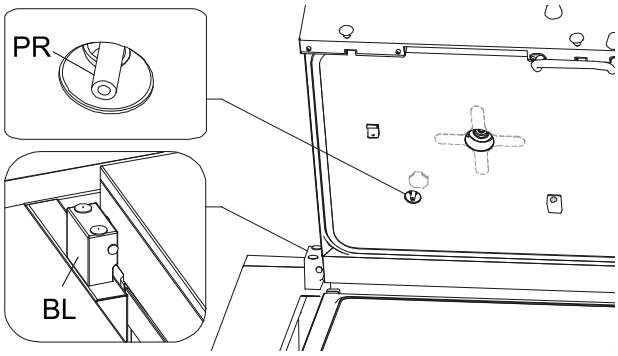

Cavity of lid safety valve

- Open the lid and unroll the food temperature probe cable from its seat.
- Unhooking the cross by turning it anti-clockwise a quarter turn.
- Clean the cavity **CA** with a round sensitive bottle brush provided with the appliance and mild cleaning agent, flush with hot water and rub dry with a cloth or absorbent paper.
- Hooking the cross by turning it clockwise a quarter turn rewind the probe cable.

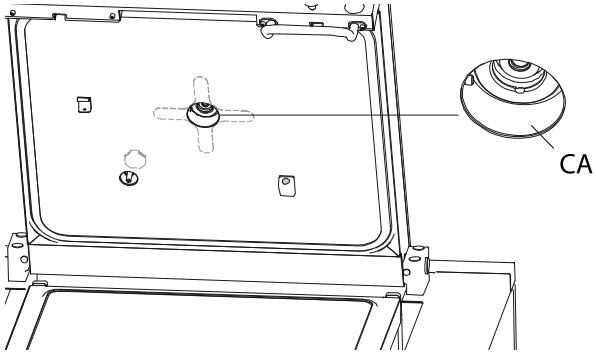

M.5 Drain tap

If the cooking appliance has a drain tap, this must be cleaned and grease every day after the last use of the appliance, depending on the frequency of use:

- dismantle the drain tap unit, refer to the paragraph L.7 *Drain tap*;
- clean with a mild cleaning agent;

- dry and grease lightly with a special odourless, tasteless grease:

  We recommend:
  - grease for taps and fittings (for taps with seal/O ring) = code 0S2118.
  - lubricant for taps with metal seals (for taps without seal/O ring) = code 0S2277.

M.6 Descaling

WARNING
Refer to "*Personal protection equipment*".

IMPORTANT
Remove limescale, fat, starch and protein layers with regular cleaning to avoid corrosion.

- Use a solution of 10% vinegar, 10% phosphoric acid or a suitable de-scaling solution available for purchase.
- Never use steel wool or other abrasive materials which can scratch the surface of the stainless steel.

M.7 Periods of non-use

If the appliance is not going to be used for some time, take the following precautions:
- close the water supply tap(s), if present;
- close the gas valves;
- disconnect the power supply or remove the plug from the power socket, if present;
- carefully clean the internal parts of the appliance;
- clean the cabinet, going over all the stainless steel surfaces vigorously with a rag moistened with paraffin oil to create a protective film;
- never store the appliance where the temperature can drop below 0°C [32°F];
- periodically air the premises.

IMPORTANT
The warranty does not cover any damages caused by ice formations in the appliance pipes.

M.8 Informations for maintenance

Preventive Maintenance reduces downtime and maximizes machines efficiency.

Customer Care Service can provide advice on the best maintenance plan to be purchased based on the intensity of use and the age of the equipment.

During service, repair and maintenance work, distractions and stress factors must be avoided.

As such, unauthorised persons must be kept away from the appliance.

IMPORTANT
- Repairs and service on the appliances must be carried out when heating elements have cooled down.
- After completion of the maintenance and repair work, the service technician must carry out checks to ensure all operating modes of all functional and safety components are in accordance with the operating instructions.

M.9 Maintenance intervals

It is advisable to carry out the checks with the frequency given in the following table:

Maintenance, inspections, checks and cleaning	Frequency	Responsability
Ordinary cleaning • general cleaning of appliance and surrounding area	• Daily	• Operator
Mechanical parts • check the mechanical parts, for cracks or deformations, tightening of screws: check the readability and condition of words, stickers and symbols and restore if necessary • if present, check hydraulic system condition, e. g. leakages	• According to the message prompted by the display / At least once a year	• Service
Electrical components • check the electrical components inside the appliance • check wirings and connections	• According to the message prompted by the display / At least once a year	• Service
General appliance overhaul • check all components, electrical equipment, corrosion, pipes…	Every 10 years[1]	• Service
Appliance internal cleaning • remove any deposits of dirt inside the appliance.	• According to the message prompted by the display / At least once a year	• Service

1. The appliance is designed and built for a duration of about 10 years. After this period of time (from commissioning) the appliance must undergo a general inspection and overhaul.

N TROUBLESHOOTING

N.1 Introduction

Certain faults may occur during normal use of the appliance. In some cases, faults can be eliminated easily and quickly by following the indication below.

The display, if present, always shows a warning message or alarm describing the occurring fault.

⚠	Warnings icon
⊗	Alarms signalling icon

If the fault persists, contact the Customer Care Service:

1. Disconnect the appliance from the main power supply;
2. Switch off the safety circuit breaker ahead of the appliance;
3. Close the gas and water tap(s), if they are present;
4. Remember to specify:
   - the type of fault
   - the appliance PNC (product number code)
   - the Ser. No. (appliance serial number).

IMPORTANT
The appliance PNC and serial number are essential for identifying the type of appliance and date of manufacture.

N.2 Troubleshooting

Anomaly	Possible causes	Actions
Alarm messages on the touch panel		
EOTS1	Internal sensor overtemperature	Cool food before cooking.
EOTS2	Internal sensor overtemperature	Cool the appliance before cooking.
EOTS3		
EOTS4	Internal sensor overtemperature	Cool the appliance by removing steam before cooking.
ESCH	Temperature too high on electronic power board	Allow appliance to cool before cooking. If error persist, contact Customer Care Service.
EWFA	Lack of water in Water Filling Automatic system	Verify water inlet or outlet. If error persist, contact Customer Care Service.
EGAS	Gas burners alarm	Verify gas supply. If error persist, contact Customer Care Service.
For all other error messages, contact Customer Care Service.		

O APPLIANCE DISPOSAL

WARNING
Refer to "*WARNING AND SAFETY INFORMATION*".

O.1 Procedure regarding appliance disposal

At the end of the product's life-cycle, make sure it is not dispersed in the environment. Different regulations are in force in the various countries, therefore comply with the provisions of the laws and competent bodies in the country where appliance disposal takes place.

The appliance's parts must be disposed of in a differentiated way, according to their different characteristics (e. g. metals, oils, greases, plastic, rubber, etc.).

Before disposing of the appliance, make sure to carefully check its physical condition, and in particular any parts of the structure that can give or break during dismantling.

NOTE!
When dismantling the appliance, any marking, this manual and other documents concerning the appliance must be destroyed.

Electrolux Professional SPA
Viale Treviso 15
33170 Pordenone
www.electroluxprofessional.com