Stationary boiling pan

ProThermetic

PBEN electric



EN Installation and operating manual *

*Original instructions

599A1B102- 2026.09

Foreword

Read the following instructions, including the warranty terms before installing and using the appliance.

Visit our website www.electroluxprofessional.com and open the Support section to:

Register your product

Get hints & tips of your product, service and repair information

The installation, use and maintenance manual (hereinafter Manual) provides the user with information necessary for correct and safe use of the appliance.

The following must not be considered a long and exacting list of warnings, but rather a set of instructions suitable for improving appliance performance in every respect and, above all, preventing injury to persons and animals and damage to property due to improper operating procedures.

All persons involved in appliance transport, installation, commissioning, use and maintenance, repair and disassembly must consult and carefully read this manual before carrying out the various operations, in order to avoid wrong and improper actions that could compromise the appliance's integrity or endanger people. Make sure to periodically inform the user regarding the safety regulations. It is also important to instruct and update personnel authorised to operate on the appliance, regarding its use and maintenance.

The manual must be available to operators and carefully kept in the place where the appliance is used, so that it is always at hand for consultation in case of doubts or whenever required.

If, after reading this manual, there are still doubts regarding appliance use, do not hesitate to contact the Manufacturer or the authorised Service Centre to receive prompt and precise assistance for better operation and maximum efficiency of the appliance. During all stages of appliance use, always respect the current regulations on safety, work hygiene and environmental protection. It is the user's responsibility to make sure the appliance is started and operated only in optimum conditions of safety for people, animals and property.

IMPORTANT

- The manufacturer declines any liability for operations carried out on the appliance without respecting the instructions given in this manual.
- The manufacturer reserves the right to modify the appliances presented in this publication without notice.
- No part of this manual may be reproduced.
- This manual is available in digital format by:
  - contacting the dealer or reference customer care;
  - downloading the latest and up to date manual on the web site www.electroluxprofessional.com;
- The manual must always be kept in an easily accessed place near the appliance. Appliance operators and maintenance personnel must be able to easily find and consult it at any time.

QR Code

Find the QR code identification sticker on the first page of this guide or on appliance to access the website and free open data/files (PNC/serial number, video, documentation etc.).

Make sure to have the application for QR code reading on your device and an internet connection.

Scan the QR code to consult the available documents for this appliance.

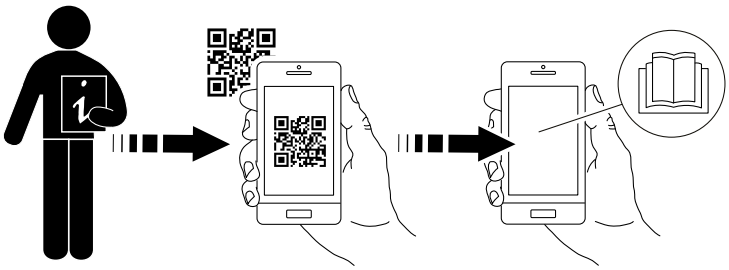

Contents

A WARNING AND SAFETY INFORMATION 5
A.1 General information 5
A.2 Personal protection equipment 6
A.3 General safety 6
A.4 ProThermetic general safety 7
A.5 Protection devices installed on the appliance 8
A.6 Safety signs to be placed on the appliance or near its area 8
A.7 Reasonably foreseeable improper use 8
A.8 Residual risks 9
A.9 Transport, handling and storage 9
A.10 Installation and assembly 10
A.11 Electrical connection 10
A.12 Water connection 10
A.13 Positioning 11
A.14 Appliance space limitations 11
A.15 Appliance cleaning 11
A.16 Preventive Maintenance 11
A.17 Parts and accessories 11
A.18 Precautions for use and maintenance 11
A.19 Appliance maintenance 12
A.20 Appliance disposal 12
B WARRANTY TERMS AND EXCLUSIONS 12
C TECHNICAL DATA 13
C.1 Data plate position 13
C.2 Appliance and manufacturer's identification data 13
C.3 How to interpret the factory description 13
C.4 Technical data 14
D GENERAL INFORMATION 14
D.1 Introduction 14
D.2 Intended use and restrictions 14
D.3 Testing and inspection 14
D.4 Copyright 14
D.5 Keeping the manual 14
D.6 Recipients of the manual 14
D.7 Definitions 14
D.8 Responsibility 15
D.9 Customer packaging checks 15
D.10 Storage 15
E INSTALLATION DIAGRAMS 15
E.1 Installation type 15
E.2 Dimension drawing for floor and wall installation 16
E.2.1 Installation points 16
E.2.2 Dimensions 16
E.3 Drain floor 16
E.3.1 Floor diagram 16
E.3.2 Dimensions 16
E.4 Installation and connection diagram 17
E.5 Accessing the appliance’s internal components 18
F INSTALLATION AND ASSEMBLY 18
F.1 Introduction 18
F.2 Customer's responsibilities 18
F.3 Before installation 18
F.4 Installing on plinth or adjustable feet 18
F.5 Disposal of packing 19
F.6 Securing or adjusting to the floor (optional) 19
F.7 Fixing on concrete plinth (optional) 19
F.8 Wall installation 19
F.8.1 Preparing the brackets 19
F.8.2 Positioning 20
F.8.3 Securing and set up 20
F.9 Sealing 20
G ELECTRICAL INSTALLATION 20
G.1 Mains connection 20
G.2 Power cable 21
G.3 Potential equalisation 21
G.4 Connect to power supply 21
H CONNECTING THE WATER SUPPLY 21
H.1 Water connection 21
H.2 Backflow protection 21
H.3 Drinking water supply 21
H.4 Mixing tap 21
H.5 Water filling automatic 22

I NORMAL APPLIANCE USE 22
I.1 Characteristics of personnel enabled to operate on the appliance 22
I.2 Basic requirements for appliance use 22
J PRODUCT DESCRIPTION 22
J.1 Use 22
J.2 Appliance overview 23
J.3 Control panel 23
J.4 Double jacket 23
J.5 Emergency stop (optional) 23
K OPERATING INSTRUCTIONS 23
K.1 First use 23
K.2 Switching on/off 24
K.3 Touch control panel 24
K.3.1 Starting page 24
K.3.2 Main menu 24
K.3.3 Manual mode 24
K.3.4 Drawer area 25
K.3.5 Additional functions 25
K.3.6 Programs mode 26
K.3.7 Start a cooking cycle 27
K.3.8 End cycle 28
K.3.9 Settings 28
K.3.10 Alarm messages 30
K.3.11 Preventive maintenance 30
K.4 Connectivity kit 30
K.5 Drain tap 31
K.5.1 Opening the drain tap 31
K.5.2 Dismounting the drain tap 31
K.5.3 Dismounting the drain tap cover 31
L APPLIANCE CLEANING AND MAINTENANCE 31
L.1 Care information 31
L.2 Cleaning introduction 31
L.3 Stainless steel surfaces 32
L.4 Daily cleaning 32
L.5 Drain tap 32
L.6 Descaling 32
L.7 Periods of non-use 32
L.8 Informations for maintenance 33
L.9 Maintenance intervals 33
M TROUBLESHOOTING 33
M.1 Introduction 33
M.2 Troubleshooting 34
N APPLIANCE DISPOSAL 34
N.1 Procedure regarding appliance disposal 34
N.1.1 Recyclability 34
N.1.2 Procedure regarding appliance disposal and component / material recovery 34

A WARNING AND SAFETY INFORMATION

A.1 General information

To ensure safe use of the appliance and a proper understanding of the manual it is necessary to be familiar with the terms and typographical conventions used in the documentation. The following symbols are used in the manual to indicate and identify the various types of hazards:



WARNING
Danger for the health and safety of operators.



WARNING
Danger of electrocution - dangerous voltage.



CAUTION
Risk of damage to the appliance or the product.



IMPORTANT
Important instructions or information on the product



Equipotentiality



Read the instructions before using the appliance



Clarifications and explanations

- Only specialised personnel are authorised to operate on the appliance.
- This appliance is to be intended for commercial and collective use, for example in kitchens of restaurants, canteens, hospitals and in commercial enterprises such as bakeries, butcheries, etc., not for continuous mass production of food. Any other use is deemed improper.
- The appliance is not intended to be used in an area open to the public.
- This appliance must not be used by minors and adults with limited physical, sensory or mental abilities or without adequate experience and knowledge regarding its use.
- Do not let children play with the appliance.
- Keep all packaging and detergents away from children.
- For your safety do not store or use gasoline or other flammable materials, vapours and liquids in the vicinity of this or any other appliance.
- Do not store explosive substances, such as pressurized containers with flammable propellant, in this appliance.
- Refer to the data given on the appliance’s data plate for relations with the Manufacturer (e.g. when ordering spare parts, etc.).
- When scrapping the appliance, the marking CE must be destroyed.
- Save these instructions carefully for further consultation by the various operators.

A.2 Personal protection equipment

Summary table of the Personal Protection Equipment (PPE) to be used during the various stages of the appliance's service life.

Stage	Protective garments 	Safety footwear 	Gloves 	Glasses 	Safety helmet 
Transport	—	●	○	—	○
Handling	—	●	●	—	—
Unpacking	○	●	●	—	—
Installation	—	●	●[1]	—	—
Normal use	○	○	○[2]	○	—
Adjustments	—	○	—	—	—
Routine cleaning	○	●	●[1–3]	○	—
Extraordinary cleaning	○	●	●[1–3]	○	—
Maintenance	○	●	●	—	—
Dismantling	○	●	●	—	—
Scrapping	○	●	●	—	—
Key:					
●	**PPE REQUIRED**				
○	**PPE AVAILABLE OR TO BE USED IF NECESSARY**				
—	**PPE NOT REQUIRED**				

1. During these operations, gloves must be cut-resistant. Failure to use the personal protection equipment by operators, specialized personnel or users can involve exposure to harm to health (depending on the model).
2. During these operations, gloves must be heatproof to protect hands from contact with hot food or hot parts of the appliance and/or when removing hot items from it. Failure to use the personal protection equipment by operators, specialised personnel or users can involve exposure to chemical risk and cause possible harm to health (depending on the model).
3. During these operations, gloves must be suitable for contact with chemical substances used (refer to the safety data sheet of the substances used for information regarding the required PPE). Failure to use the personal protection equipment by operators, specialized personnel or users can involve exposure to chemical risk and cause possible harm to health (depending on the model).

A.3 General safety

- The appliances are provided with electric and/or mechanical safety devices for protecting workers and the appliance itself.
- Never operate the appliance, removing, modifying or tampering with the guards, protection or safety devices.
- Do not make any modifications to the parts supplied with the appliance.
- Several illustrations in the manual show the appliance, or parts of it, without guards or with guards removed. This is purely for explanatory purposes. Do not use the appliance without the guards or with the protection devices deactivated.

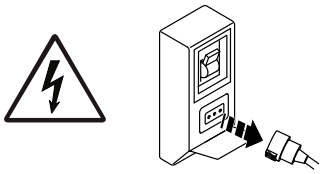

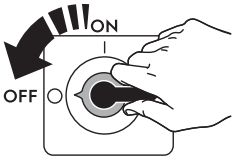

Disconnect the appliance from the power supply before carrying out any installation, assembly, cleaning or maintenance procedure.

- Do not remove, tamper with or make illegible the CE marking, the safety, danger and instruction signs and labels on the appliance.
- The A-weighted emission sound pressure level does not exceed 70 dB(A).
- Do not use products (even if diluted) containing chlorine (sodium hypochlorite, hydrochloric or muriatic acid, etc.) to clean the appliance or the floor under it.
- Carefully avoid exposure of the equipment to ozone - do not use ozonizers in the rooms where the equipment is installed.
- Do not spray aerosols in the vicinity of this appliance while it is in operation.
- The following operations have to be carried out by specialised authorised personnel or Customer Care Service provided with all the appropriate personal protection equipment (A.2 *Personal protection equipment*), tools, utensils and ancillary means, who can ask the manufacturer to supply a servicing manual:
  - Installation and assembly
  - Positioning
  - Electrical connection
  - Appliance cleaning, repair and extraordinary maintenance
  - Appliance disposal
  - Work on electrical equipment

A.4 ProThermetic general safety

- The maximum filling level must not exceed the relevant marking.
  Exceeding the maximum fill mark may cause scalding as a result of hot food spilling and/or flowing over the edge of the pot.
- Do not place any objects on the closed lid during operation.
- Do not heat closed containers inside the appliance to avoid the risk of explosion.
- Do not use the appliance to dry tea towels and other textiles.
- Be careful when you open the lid, because hot steam could pour out.
- Be careful when emptying the appliance as there is a risk of burns.
- Overheated oil/fat can self-ignite. Never put water on burning oil or fat.
- Be careful when introducing oil, grease, water or other food into the preheated hot appliance as it can cause splashes.
- Pay special attention to the presence of foam. If the lid is opened at a low residual overpressure, hot food can flow out and injure the operating personnel.
  Depending on the food to be cooked, reduce the filling level to avoid foam overflowing.
- Never use this appliance for frying.
- If the stirrer is present, always keep the lid closed while it is operating.
- Do not put any objects (spoon, ladle, etc.) into the appliance during stirrer operation.
- In case of malfunctions, blocking of the stirrer or if unusual noises occur, immediately press the emergency stop. The stirrer must no longer be used.
- In pressure appliances, after cooking with the lid closed, first release the pressure from the cooking chamber and do not open the lid until the pressure is completely exhausted inside the appliance.

A.5 Protection devices installed on the appliance

Guards

The appliance has:

- fixed guards (e.g. casings, covers, side panels, etc.), fixed to the appliance and/or frame with screws or quick-release connectors that can only be removed or opened with tools; therefore the user must not remove or tamper with such devices. The Manufacturer declines any liability for damage due to tampering or their non-use;
- appliance electrical equipment access panels or doors, made from hinged panels openable with tools. The panel or the door must not be opened when the appliance is connected to the power supply.

A.6 Safety signs to be placed on the appliance or near its area

Prohibition	Meaning
	do not remove the safety devices
	do not use water to extinguish fires (placed on electrical parts)
	Keep the area around the appliance clear and free from combustible materials. Do not keep flammable materials in the vicinity of the appliance

Danger	Meaning
	danger of crushing hands
	caution hot surface
	danger of electrocution (shown on electrical parts with indication of voltage)

A.7 Reasonably foreseeable improper use

Improper use is any use different from that specified in this manual. During appliance operation, other types of work or activities deemed improper and that in general can involve risks for the safety of operators and damage to the appliance are not allowed. Reasonably foreseeable improper use includes:

- lack of appliance maintenance, cleaning and periodical checks;
- structural changes or modifications to the operating logic;
- tampering with the guards or safety devices;
- failure to use personal protection equipment by operators, specialised personnel and maintenance personnel;
- failure to use suitable accessories (e.g. use of unsuitable equipment or ladders);
- keeping combustible or flammable materials, or in any case materials not compatible with or pertinent to the work, near the appliance;

- wrong appliance installation;
- placing in the appliance any objects or things not compatible with its use, or that can damage the appliance, cause injury or pollute the environment;
- climbing on the appliance;
- non-compliance with the requirements for correct appliance use;
- other actions that give rise to risks not eliminable by the Manufacturer.

A.8 Residual risks

The appliance has several risks that were not completely eliminated from a design standpoint or with the installation of adequate protection devices. Nevertheless, through this manual the Manufacturer has taken steps to inform operators of such risks, carefully indicating the personal protection equipment to be used by them. In order to reduce the risks, provide for sufficient spaces while installing the unit.

To preserve these conditions, the areas around the appliance must always be:

- kept free of obstacles (e.g. ladders, tools, containers, boxes, etc.);
- clean and dry;
- well lit.

For the Customer's complete information, the residual risks remaining on the appliance are indicated below: such actions are deemed improper and therefore strictly forbidden.

Residual risk	**Description of hazardous situation**
Slipping or falling	The operator can slip due to water, any liquid or dirt on the floor
Burns/abrasions (e.g. heating elements, cold pan, cooling circuit plates and pipes)	The operator deliberately or unintentionally touches some components inside the appliance without using protective gloves.
Electrocution	Contact with live parts during maintenance operations carried out with the electrical panel powered
Crushing or injury	For tipping appliances only and during tilting, the operator may be crushed between the pan and the parts that remain stationary.
Tipping of loads	When handling the appliance or the packing containing it, using unsuitable lifting systems or accessories or with the unbalanced load
Chemical	Contact with chemical substances (e.g. detergent, rinse aid, scale remover, etc.) without taking adequate safety precautions. Therefore always refer to the safety cards and labels on the products used.
Sudden closure	The operator for normal appliance use could suddenly and deliberately close the lid.

A.9 Transport, handling and storage

- Transport (i.e. transfer of the appliance from one place to another) and handling (i.e. transfer inside workplaces) must occur with the use of special and adequate means.
- Please refer to indications on packaging for stackability during transport, handling and storage.
- Do not stand under suspended loads during loading or unloading operations. Unauthorized personnel must not enter the work area.

- The weight of the appliance alone is not sufficient to keep it steady.
- For appliance handling, do not lift and anchor it to movable or weak parts such as: casings, electrical raceways, pneumatic parts, etc.
- Do not push or pull the appliance to move it, as it may tip over. Use proper tool to lift the appliance.
- Arrange a suitable area with flat floor for appliance unloading and storage operations.
- Appliance transport, handling, shifting and storage personnel must be adequately instructed and trained regarding the safely use of lifting systems and personal protection equipment suitable for the type of operation carried out.
- When removing the anchoring systems, make sure the stability of the appliance parts does not depend on the anchoring and, therefore, that this operation does not cause the load to fall off the vehicle. Before unloading the appliance components, make sure all the anchoring systems are removed.

A.10 Installation and assembly

- The operations described must be carried out in compliance with the current safety regulations and provisions in force in the country of use.
- The plug, if present, must be accessible after positioning the appliance in the place of installation.
- The appliance is not suitable for installation outdoors and/or in places exposed to atmospheric agents (rain, direct sunlight, etc.).

A.11 Electrical connection

- The power supply system must be suitable for the rated current of the connected appliance; the connection must be carried out in compliance with the regulations and provisions in force in the country of use.
- The information regarding the appliance power supply voltage and frequency is given on the data plate.
- Install between the power cable and the electric line a differential thermal-magnetic switch suitable for the absorption specified on the data plate, with contact gap enabling complete disconnection in category III overvoltage conditions and complying with the regulations in force.

  For the correct sizing of the switch or plug, refer to the absorbed current specified on the appliance data plate.
- If the power cable is damaged or too short, it must be replaced by the Customer Care Service or in any case by specialised personnel, in order to prevent any risk.
- The manufacturer declines any liability for damage or injury resulting from breach of the above rules or non-compliance with the electrical safety regulations in force in the country where the appliance is used.
- Verify that a safety circuit breaker is installed between the power cable of the appliance and the mains electric line. The contact opening max. distance and leakage current must comply with the local safety regulations.
- In case of electrical permanent connection: the device must be lockable in the open position and accessible even after the appliance is installed in its place.

A.12 Water connection

- **Water connection must be carried out in compliance with the regulations and provisions in force with the country.**
- The appliance must be supplied with drinking water at a pressure of maximum 6 bar (600 kPa).
-

- **WARNING!** The manufacturer declines any liability if the safety regulations are not respected.

A.13 Positioning

- Install the appliances, taking all the safety precautions required for this type of operation, also respecting the relevant fire-prevention measures.
- The installation diagram gives the appliance overall dimensions and the position of connections (gas, electricity, water). Check that they are available and ready for making all the necessary connections.
- Prevent the areas where the appliance is installed to be polluted with corrosive substances (chlorine, etc.). The manufacturer declines any liability for corrosive effects due to external causes.

A.14 Appliance space limitations

- Do not install the appliance on flammable walls. If an appliance is set up next to or against temperature-sensitive walls, maintain an adequate space to enable subsequent servicing or maintenance operations.
- A suitable space must be left around the appliance (for operations, maintenance, etc.).
- This space must be increased in case of use and/or transfer of other equipment and/or means or if exit routes are necessary inside the workplace.

A.15 Appliance cleaning

- Do not touch the appliance with wet hands or feet or when barefoot.
- Put the appliance in safe conditions before starting any cleaning operation.
- Do not allow oil or grease to come into contact with plastic parts. Do not allow dirt, fat, food or other residuals to form deposits on the appliance.
- Respect the requirements for the various routine and extraordinary maintenance operations. Non-compliance with the instructions can create risks for personnel.
- Do not spray water or use water jets, steam cleaner or high pressure cleaner.

A.16 Preventive Maintenance

In order to ensure the safety and performance of your equipment, it is recommended that service is undertaken by Electrolux Professional authorised engineers every 12 months, in accordance with Electrolux Professional Service Manuals. Please contact your local Electrolux Professional Service Centre for further details.

A.17 Parts and accessories

Use only original accessories and/or spare parts. Failure to use original accessories and/or spare parts will invalidate the original manufacturer warranty and may render the appliance not compliant with the safety standard.

A.18 Precautions for use and maintenance

- Risks mainly of a mechanical, thermal and electrical nature exist in the appliance. Where possible the risks have been neutralised:
  - directly, by means of adequate design solutions.
  - indirectly by using guards, protection and safety devices.
- Any anomalous situations are signalled on the control panel display.
- During maintenance several risks remain, as these could not be eliminated, and must be neutralised by adopting specific measures and precautions.
- Do not carry out any checking, cleaning, repair or maintenance operations on moving parts. Workers must be informed of this prohibition by means of clearly visible signs.

- Make sure to periodically check correct operation of all the safety devices and the insulation of electrical cables, which must be replaced if damaged.

In case of a significant anomaly (e.g. short circuits, wires coming out of the terminal block, motor breakdowns, worn electrical cable sheathing, etc.) the operator for normal appliance use must:

- immediately deactivate the appliance and disconnect all the supplies (electricity, gas, water).

Before carrying out any operation on the appliance, always consult the manual which gives the correct procedures and contains important information on safety.

A.19 Appliance maintenance

- The inspection and maintenance intervals depend on the actual appliance operating conditions and ambient conditions (presence of dust, damp, etc.), therefore precise time intervals cannot be given. In any case, careful and periodical appliance maintenance is advisable in order to minimise service interruptions.
- It is advisable to stipulate a preventive and scheduled maintenance contract with the Customer Care Service.
- Put the appliance in safe conditions before starting any maintenance operation.

A.20 Appliance disposal

- Make the appliance unusable by removing the power cable and any compartment closing devices, to prevent the possibility of someone becoming trapped inside.

B WARRANTY TERMS AND EXCLUSIONS

If the purchase of this product includes warranty coverage, warranty is provided in line with local regulations and subject to the product being installed and used for the purposes as designed, and as described within the appropriate equipment documentation.

Warranty will be applicable where the customer has used only genuine spare parts and has performed maintenance in accordance with Electrolux Professional user and maintenance documentation made available in paper or electronic format.

Electrolux Professional strongly recommends using Electrolux Professional approved cleaning, rinse and descaling agents to obtain optimal results and maintain product efficiency over time.

The Electrolux Professional warranty does not cover:

- service trips cost to deliver and pick up the product;
- installation;
- training on how to use/operate;
- replacement (and/or supply) of wear and tear parts unless resulting from defects in materials or workmanship reported within one (1) week from the failure;
- correction of external wiring;
- correction of unauthorized repairs as well as any damages, failures and inefficiencies caused by and/or resulting from;
  - insufficient and/or abnormal capacity of the electrical systems (current/voltage/frequency, including spikes and/or outages);
  - inadequate or interrupted water supply, steam, air, gas (including impurities and/or other that does not comply with the technical requirements for each appliance);
  - plumbing parts, components or consumable cleaning products that are not approved by the manufacturer;
  - customer's negligence, misuse, abuse and/or non-compliance with the use and care instructions detailed within the appropriate equipment documentation;
  - improper or poor: installation, repair, maintenance (including tampering, modifications and repairs carried out by third parties not authorized) and modification of safety systems;
  - Use of non-original components (e. g.: consumables, wear and tear, or spare parts);
  - environment conditions provoking thermal (e. g. overheating/freezing) or chemical (e. g. corrosion/oxidation) stress;
  - foreign objects placed in- or connected to- the product;
  - accidents or force majeure;
  - transportation and handling, including scratches, dents, chips, and/or other damage to the finish of the product, unless such damage results from defects in materials or workmanship and is reported within one (1) week of delivery unless otherwise agreed;
- product with original serial numbers that have been removed, altered or cannot be readily determined;
- replacement of light bulbs, filters or any consumable parts;
- any accessories and software not approved or specified by Electrolux Professional.

Electrolux Professional warranty will be void and manufacturer shall have no liability related thereto in case of any modification of the product or related hardware/ software/programming.

Warranty does not include scheduled maintenance activities (including the parts required for it) or the supply of cleaning agents unless specifically covered within any local agreement, subject to local terms and conditions.

Check on Electrolux Professional website the list of authorized customer care.

C TECHNICAL DATA

C.1 Data plate position

The data plate is located in the lower left corner (see fig. below).

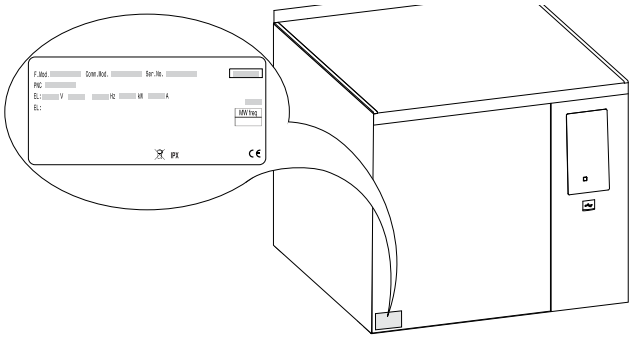

C.2 Appliance and manufacturer's identification data

The data plate gives the product identification and technical data.

An example of the marking or data plate on the appliance is given below:

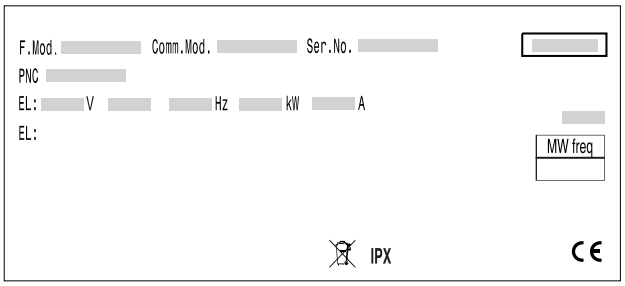

The meaning of the various information given on it is listed below:

F.Mod.	factory description of product
Comm.Mod.	commercial description
PNC	production number code
Ser.No.	serial number
Type ref.	certification group of the appliance
V	power supply voltage
Hz	power supply frequency
kW	power input
A	absorbed current
CE	CE marking
	WEEE symbol
IPX6	dust and water protection rating

C.3 How to interpret the factory description

The factory description on the data plate has the following meaning:

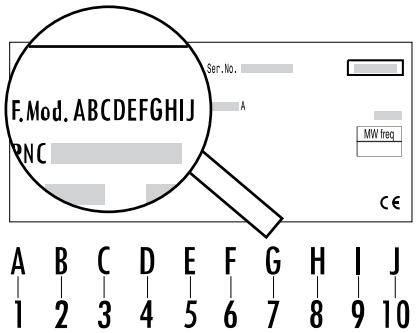

1 - Product line

P	ProThermetic

2 - Family

P	Boiling pan

3 - Pan shape

E	Rectangular

4- Type

N	Stationary, not tilting

5 + 6 - Capacity

08	80 litres
20	200 litres
30	300 litres
40	400 litres

7 - Power supply

E	electric

8 - Configuration

A	floorstanding, depth 800 mm, height 700 mm
B	floorstanding, depth 850 mm, height 700 mm
C	floorstanding, depth 900 mm, height 700 mm
E	floorstanding, depth 800 mm, height 800 mm
G	floorstanding, depth 900 mm, height 800 mm
J	standing against the wall with splashback, depth 800 mm, height 700 mm
K	standing against the wall with splashback, depth 850 mm, height 700 mm
L	standing against the wall with splashback, depth 900 mm, height 700 mm
M	standing against the wall with splashback, depth 800 mm, height 800 mm
P	standing against the wall with splashback, depth 900 mm, height 800 mm

9 - Electrical connection

E	400 V / 3N ~

10 - Option

M	with mixing tap included
O	No options
P	mixing tap and accessories included

C.4 Technical data

	PBEN 08	PBEN 20	PBEN 30	PBEN 40
Internal pan dimensions (mm): width	380	680	1080	1380
Internal pan dimensions (mm): depth	550	550	550	550
Internal pan dimensions (mm): height	460	568	568	568
Dimension of heating surface (mm): width	380	680	1050	1380
Dimension of heating surface (mm): depth	550	550	550	550
Max. operating pressure (bar)	1.5	1.5	1.5	1.5
Max. permissible pressure (bar)	1.7	1.7	1.7	1.7
Time required to reach the boiling point (min)	32	44	50	55

	Electrical power kW	Voltage / Phases V / Nr	Frequency Hz	Power supply cable section mm²	Amperage A
P B E N 0 8 * * * *	18.2	400 V / 3N	50 – 60	6	26
P B E N 2 0 * * * *	30.2	400 V / 3N	50 – 60	10	43.4
P B E N 3 0 * * * *	36.2	400 V / 3N	50 – 60	10	52.1
P B E N 4 0 * * * *	48.2	400 V / 3N	50 – 60	16	69.5

D GENERAL INFORMATION

D.1 Introduction

This manual contains information relevant to various appliances. The product images in this guide are only an example.

The drawings and diagrams given in the manual are not in scale. They supplement the written information with an outline, but are not intended to be a detailed representation of the appliance supplied.

The numerical values given on the appliance installation diagrams refer to measurements in millimeters and/or inches.

D.2 Intended use and restrictions

This appliance is designed for cooking food. It is intended for collective use.

Any other use is deemed improper.

NOTE!
The manufacturer declines any liability for improper use of the product.

D.3 Testing and inspection

Our appliances have been designed and optimized, with laboratory testing, in order to obtain high performance and efficiency.

The appliance is shipped ready for use.

Passing of the tests (visual inspection - gas/electrical test - functional test) is guaranteed and certified by the specific enclosures.

To ensure protection class compliance, all seals must remain in perfect condition and all components must be properly assembled after installation, repairs and maintenance work.

D.4 Copyright

This manual is intended solely for consultation by the operator and can only be given to third parties with the permission of Electrolux Professional.

D.5 Keeping the manual

The manual must be carefully kept for the entire life of the appliance, until scrapping. The manual must stay with the appliance in case of transfer, sale, hire, granting of use or leasing.

D.6 Recipients of the manual

This manual is intended for:

- the carrier and handling personnel;
- installation and commissioning personnel;
- the employer of appliance users and the workplace manager;
- operators for normal appliance use;
- specialised personnel - Customer Care service (see service manual).

D.7 Definitions

Listed below are the definitions of the main terms used in the manual. It is advisable to read them carefully before use.

Operator	appliance installation, adjustment, use, maintenance, cleaning, repair and transport personnel.
Manufacturer	Electrolux Professional or any other service centre authorised by Electrolux Professional.
Operator for normal appliance use	an operator who has been informed and trained regarding the tasks and hazards involved in normal appliance use.
Customer Care service or specialised personnel	an operator instructed/trained by the Manufacturer and who, based on his professional and specific training, experience and knowledge of the accident-prevention regulations, is able to appraise the operations to be carried out on the appliance and recognise and prevent any risks. His professionalism covers the mechanical, electrotechnical and electronics fields etc.
Danger	source of possible injury or harm to health.
Hazardous situation	any situation where an operator is exposed to one or more hazards.
Risk	a combination of probabilities and risks of injury or harm to health in a hazardous situation.
Protection devices	safety measures consisting of the use of specific technical means (guards and safety devices) for protecting operators against risks.
Guard	an element of a appliance used in a specific way to provide protection by means of a physical barrier.

Safety device	a device (other than a guard) that eliminates or reduces the risk; it can be used alone or in combination with a guard.
Customer	the person who purchased the appliance and/or who manages and uses it (e. g. company, entrepreneur, firm).
Electrocution	an accidental discharge of electric current on a human body.
Emergency stop device	a group of components intended for the emergency stop function; the device is activated with a single action and prevents or reduces damage to persons/ appliances/property/animals.

D.8 Responsibility

The Manufacturer declines any liability for damage and malfunctioning caused by:

- non-compliance with the instructions contained in this manual;
- repairs not carried out in a workmanlike fashion, and replacements with parts different from those specified in the spare parts catalogue (the fitting and use of non-original spare parts and accessories can negatively affect appliance operation and invalidates the original manufacturer warranty);
- operations carried out by non-specialised personnel;
- unauthorized modifications or operations;
- missing, lack or inadequate maintenance;
- improper appliance use;
- unforeseeable extraordinary events;
- use of the appliance by uninformed and / or untrained personnel;
- non-application of the current provisions in the country of use, concerning safety, hygiene and health in the workplace.

The Manufacturer declines any liability for:

- damage caused by arbitrary modifications and conversions carried out by the user or the Customer;
- inaccuracies contained in the manual, if due to printing or translation errors.

The employer, workplace manager or service technician are responsible for identifying and choosing adequate and suitable personal protection equipment to be worn by operators, in compliance with regulations in force in the country of use.

Any supplements to the installation, use and maintenance manual the Customer receives from the Manufacturer will form an integral part of the manual and therefore must be kept together with it.

D.9 Customer packaging checks

- The forwarder is responsible for the goods during transport and delivery.
- Make a complaint to the forwarder in case of visible or hidden damage.
- Specify any damage or shortages on the dispatch note.
- The driver must sign the dispatch note: the forwarder can reject the claim if the dispatch note is not signed (the forwarder can provide the necessary form).
- For hidden damage or shortages becoming apparent only after unpacking, request the forwarder for inspection of the goods within and no later than 15 days after delivery.

After packaging checks

1. Remove the packaging.
   Take care when unpacking and handling of the appliance to not cause any shocks on itself.
2. Keep all the documentation contained in the packaging.

D.10 Storage

The appliance and/or its parts must be stored and protected from damp, in a non-aggressive place, free of vibrations and with room temperatures between 5°C and 50°C.

The place where the appliance is stored must:

- can take the appliance load,
- have a flat support surface to avoid deforming the appliance or damage to the support feet.

E INSTALLATION DIAGRAMS

E.1 Installation type

The appliance must always be installed in its intended location according to the relevant installation and connection diagrams (xxxx).

The appliance should be connected to fixed cables.

Installation options:

1. **Standing against the wall**
   - on adjustable feet
   - on steel bases
   - on concrete plinth
2. **Free standing**
   - on adjustable feet
   - on steel bases
   - on concrete plinth
3. **Wall mounted**
   (with an accessory kit)

The appliances are suitable for setting up as single appliances or as a group of appliances.

NOTE!
When installing the appliance on a steel or concrete plinth, the bottom plate must not be mounted.

The ventilation engineer is responsible for assessing/planning a technically correct ventilation.

E.2 Dimension drawing for floor and wall installation

E.2.1 Installation points

Floor installation

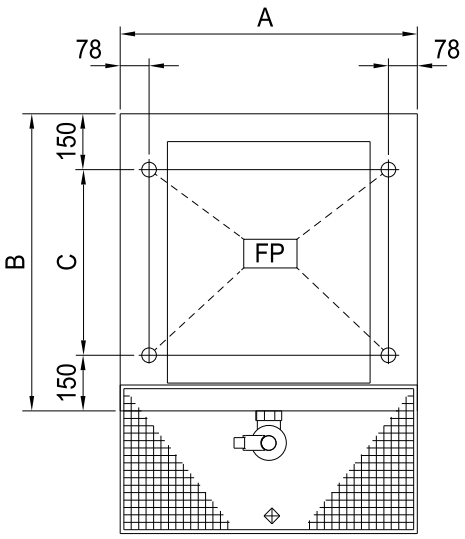

FP = floor attachment points

Wall installation

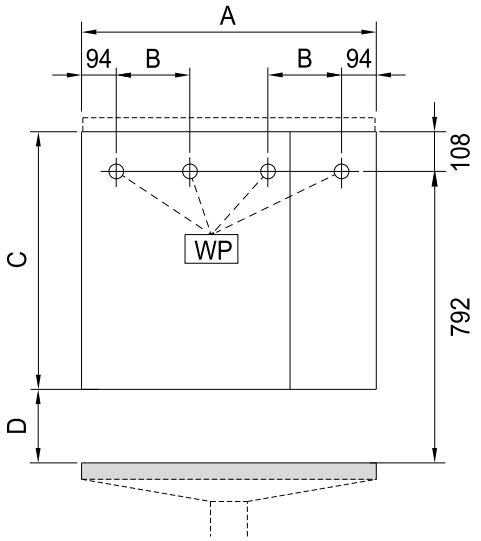

WP = wall attachment points

E.2.2 Dimensions

A
700
1000
1400
1700

B	C
800	500
850	550
900	600

A	B
700	150
1000	300
1400	2x 216[1]
1700	3x 216[2]

C	D
700	200
800	100

1. Total six wall attachment points
2. Total eight wall attachment points

E.3 Drain floor

E.3.1 Floor diagram

For these appliances, the emptying area is provided with tanks equipped with a movable upper grate and a floor drain, to be used during cleaning.

Floor tanks can be manufactured for a single appliance or for an entire group of appliances.

The tanks are normally cemented in the floor.

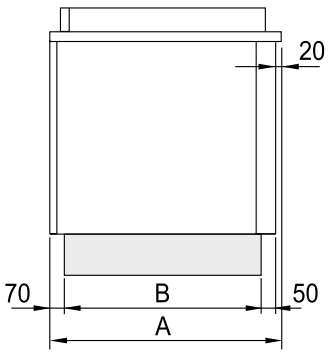

Freestanding

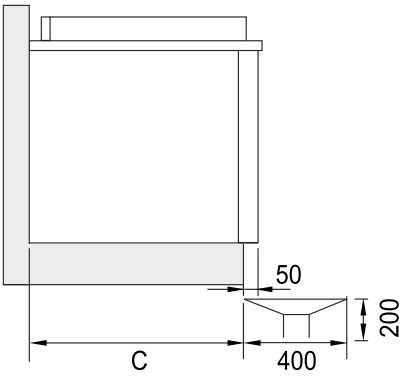

Against the wall

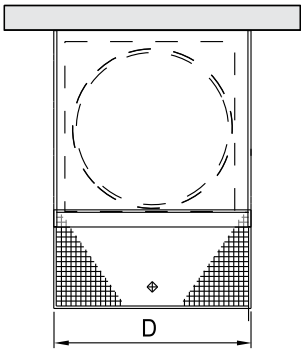

E.3.2 Dimensions

A	B	C
800	660	730
850	710	780
900	760	830

D
700
1000
1400
1700

E.4 Installation and connection diagram

Floor mounted appliances

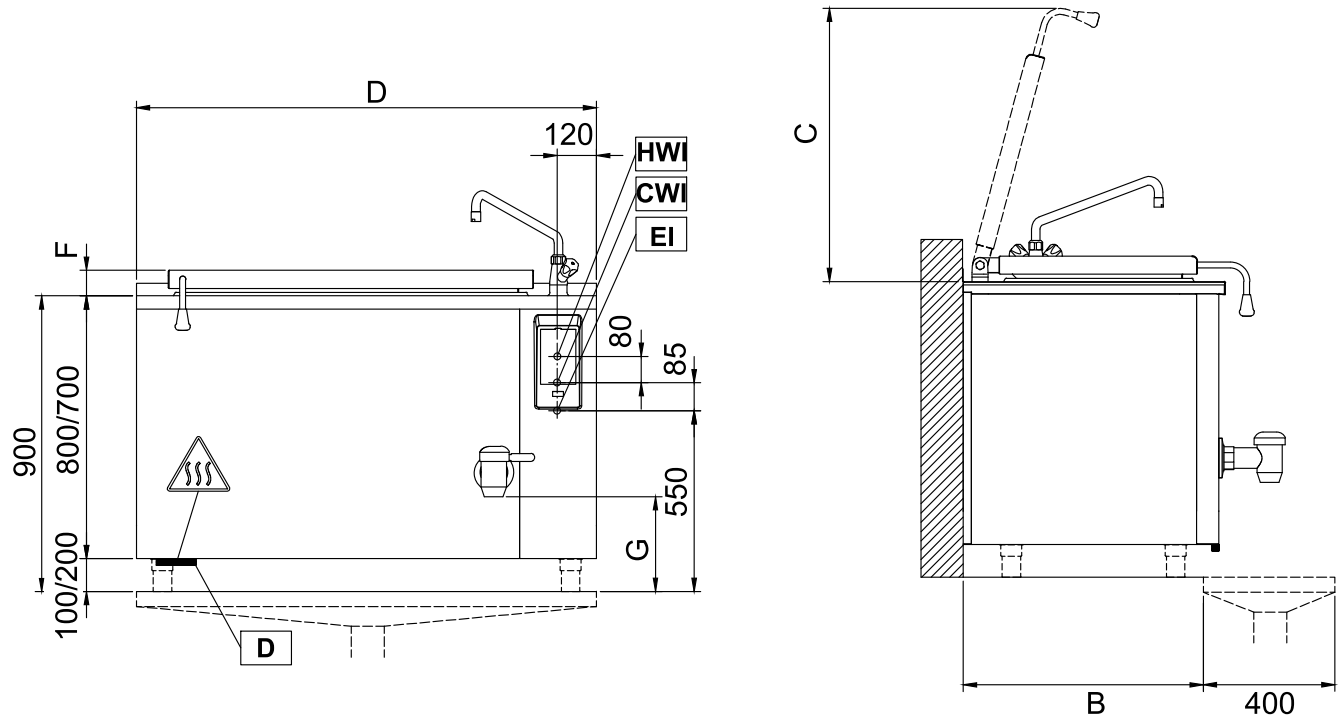

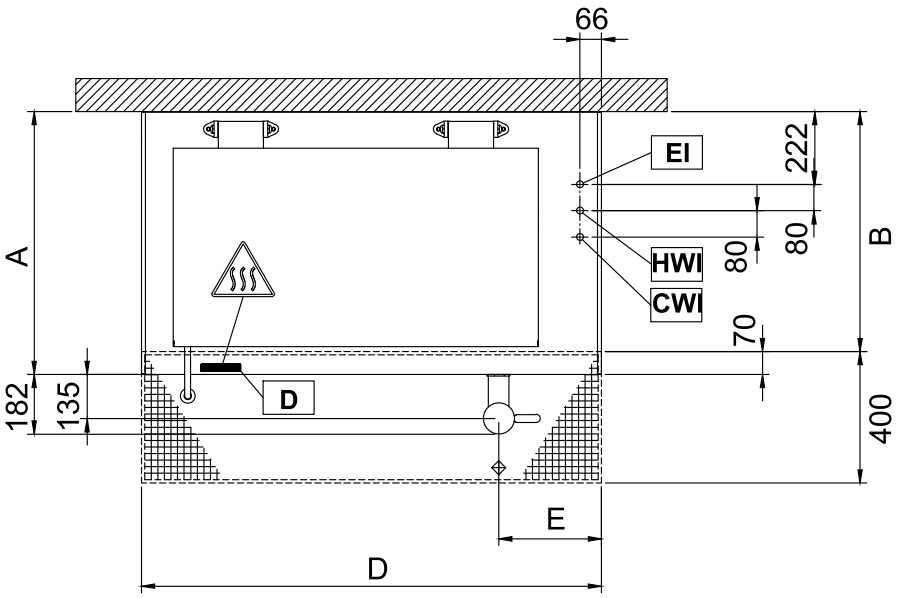

EI = Electrical connection
D = Drain

HWI = Hot water connection
CWI = Cold water connection

	80 L			200 L			300 L			400 L		
A	800	850	900	800	850	900	800	850	900	800	850	900
B	730	780	830	730	780	830	730	780	830	730	780	830
C	831	831	818	831	831	818	831	831	818	831	831	818
D	700	700	700	1000	1000	1000	1400	1400	1400	1700	1700	1700
E	313	313	313	283	283	300	313	313	313	297	283	303
F	78	78	65	74	74	61	78	78	65	78	78	65
G	398	398	398	288	288	288	288	288	288	288	288	288

E.5 Accessing the appliance's internal components

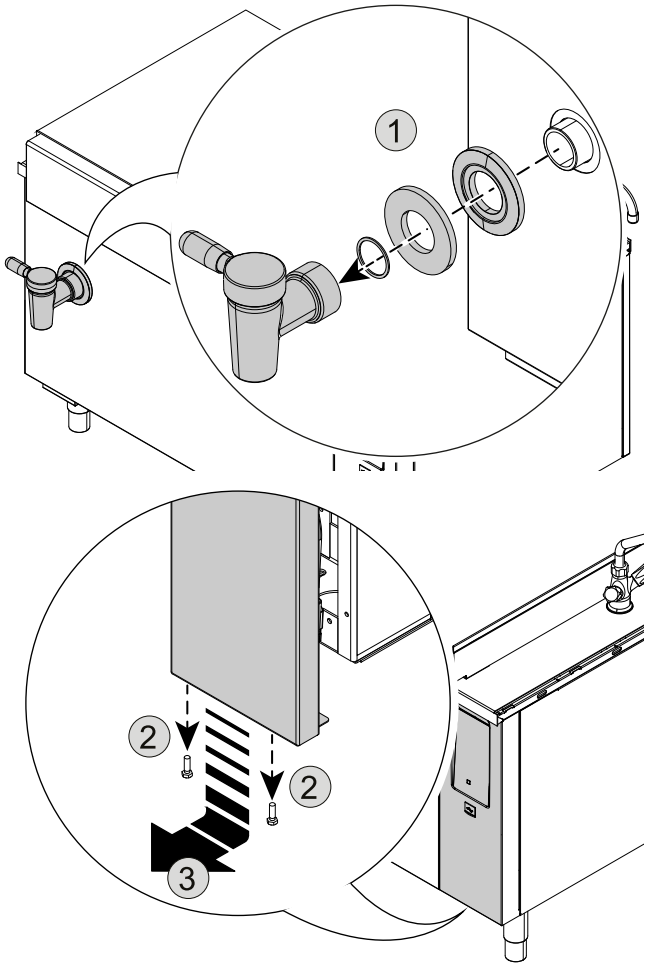

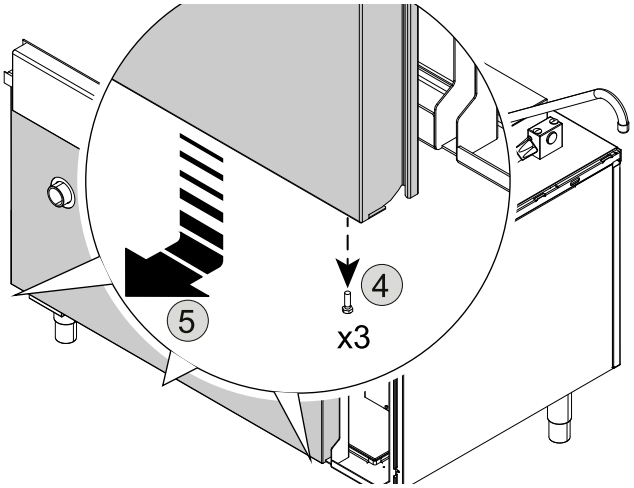

F INSTALLATION AND ASSEMBLY

F.1 Introduction

WARNING
Refer to "*WARNING AND SAFETY INFORMATION*".

To ensure correct operation of the appliance and maintain safe conditions during use, carefully follow the instructions given in this chapter.

Check and, if necessary, level the appliance after positioning. Incorrect levelling can cause appliance malfunctioning.

F.2 Customer's responsibilities

The tasks and works required of the Customer are:

- check the floor planarity on which the appliance is placed;
- arrange an earthed power socket of suitable capacity for the input specified on the data plate;
- prearrange a high-sensitivity manual-reset magneto-thermal circuit-breaker;
- prearrange a device lockable in the open position for the connection to the power supply.
- Do not install the unit in environments where temperatures may fall below 0°C [32°F] or rise above 40°C [104°F].

NOTE!
For information regarding the electrical connection, refer to "A.11 *Electrical connection*".

F.3 Before installation

Depending on your model, prepare the following before the appliance is installed and positioned correctly:

- Fastening elements, i.e. drill holes and insert dowels. You can find accompanying notes in the relevant sections on F.8 *Wall installation*.
- Prepare water, gas and electrical connections and install a shut-off valve, if necessary.

F.4 Installing on plinth or adjustable feet

NOTE!
If installing on a steel plinth or adjustable feet, always make sure these are attached to the appliance beforehand. There are no tools for taking the unit down from the transport pallet and putting it in place; all you need is manpower, with two to four men required depending on the size of the unit.

1. Transport the appliance on its transport pallet directly in front of the point of installation.
   The installation connections that are sticking out of the floor should be as close as possible to the side of the transport pallet.

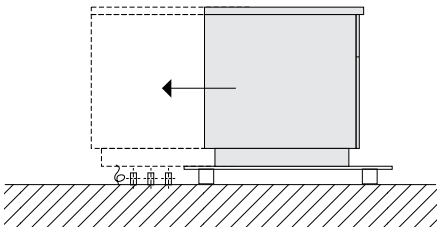

2. Shift the appliance onto the transport pallet such that all of the installation connections lie within the appliance.

3. Tip the appliance until it is standing on the floor. Then lift at the front and remove the transport pallet.

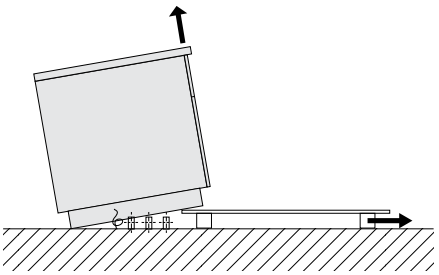

4. Carefully lower the appliance and then move it into the correct position.
5. Align the appliance horizontally and secure it.

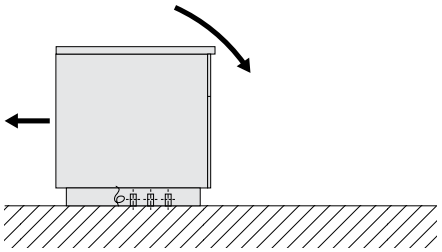

6. Remove the outer protective film and the edge covers, taking care not to scratch the surface of the appliance.
   Very slowly pull off the protective film on the stainless steel surfaces, without ripping, to prevent any adhesive residue.
   Remove any adhesive residue with a non-corrosive solvent. Then rinse and dry the spot thoroughly.

For water and electrical connection, remove the user interface panel and the front panel, refer to paragraph E.5 *Accessing the appliance's internal components*.

When successful installation is complete reattach the panels.

F.5 Disposal of packing

The packing must be disposed of in compliance with the current regulations in the country where the appliance is used. All the packing materials are environmentally friendly.

They can be safely kept, recycled, or burned in an appropriate waste incineration plant. Recyclable plastic parts are marked as follows:

PE	**Polyethylene** • Outer wrapping • Instructions bag
PP	**Polypropylene** • Straps • Top packaging panels
PS	**Polystyrene foam** • Corner protectors

The parts in wood and cardboard can be disposed of, respecting the current regulations in the country where the appliance is used.

F.6 Securing or adjusting to the floor (optional)

If you need to secure it to the floor, the appliance comes with compatible adjustable feet.

We recommend you adjust the feet so you end up with a working height of 900 mm. Level the unit with a spirit level.

A. **Attaching the unit with screws**
   The feet have metal plates which may be secured to the floor using screws .

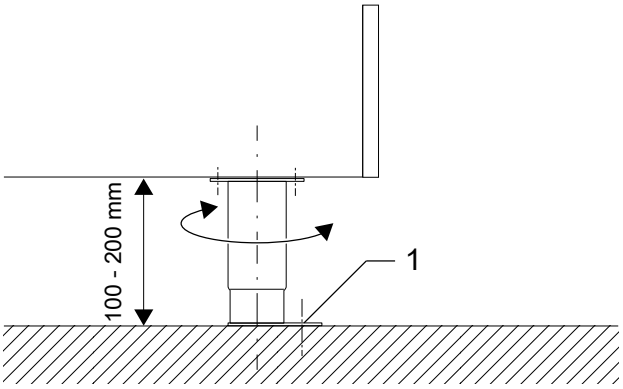

B. **Attaching the unit by welding**
   The metal plate underneath the feet must be welded to the floor with a continuous weld around the outer edge.

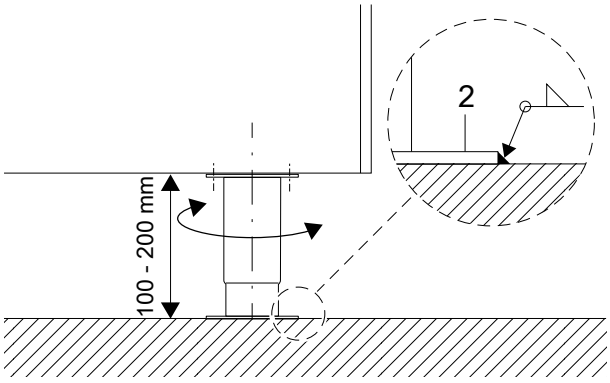

F.7 Fixing on concrete plinth (optional)

IMPORTANT
Before positioning the appliance, prepare the fixing holes according to the installation diagrams in paragraph E.2 *Dimension drawing for floor and wall installation*.

1. Drill the hole with diameter of 10 mm and depth of 80 mm.
2. Clean the hole after drilling.
3. Use the supplied mounting kit to fix the appliance to the floor.

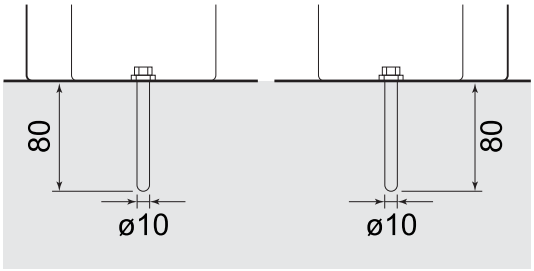

F.8 Wall installation

F.8.1 Preparing the brackets

Before you start, prepare the mounting holes in the wall according to the specifications in the mounting diagram.

1. Use the supplied wall anchors **1** with the threaded rods **2**. The holes must have a diameter of 18 mm [0,71″] and a minimum depth of 145 mm [5,71″].
2. Clean the hole after drilling.
3. Mount the supporting profile **3** with the nuts **4** and the spring washers **5**.
4. Adjust the supporting profile **3** in height and alignment using a spirit level.

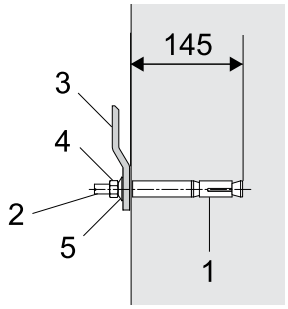

F.8.2 Positioning

We recommend using a lift truck with a stable shelf to take the unit down from the transport pallet and position it into place.

1. Transport the appliance on its transport pallet directly in front of the point of installation.

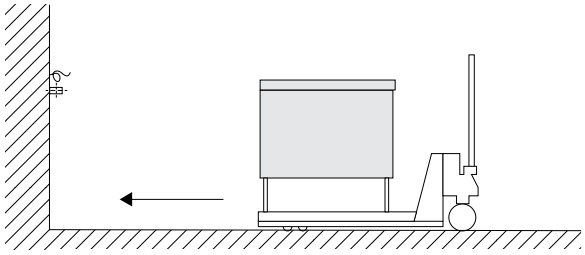

2. Remove the user interface panel and the front panel to allow for electrical and water connections, refer to the paragraph E.5 *Accessing the appliance's internal components*.
3. Carry the appliance on the lifting cart to the prepared position on the wall and lift it to the correct height.

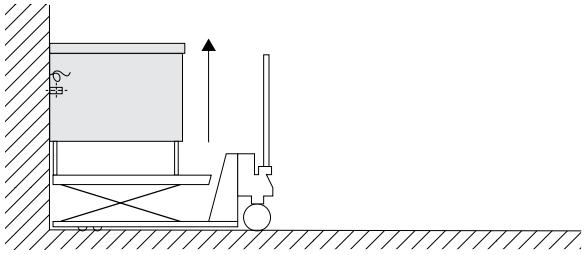

4. Remove the transport pallet.

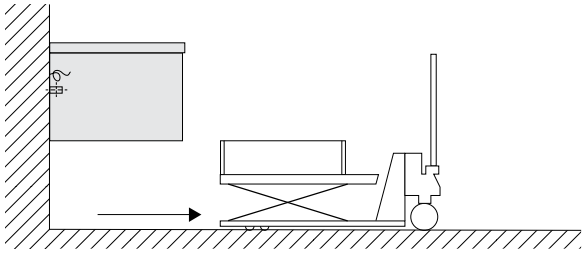

5. Remove the outer protective film and the edge covers, taking care not to scratch the surface of the appliance.
   Very slowly pull off the protective film on the stainless steel surfaces, without ripping, to prevent any adhesive residue.
   Remove any adhesive residue with a non-corrosive solvent.
   Then rinse and dry the spot thoroughly.

CAUTION
When successful installation is complete reattach all the panels.

F.8.3 Securing and set up

Lift the unit on the prepared support profile and level it using a spirit level. Check the height in relation to other devices.

Use the adjusting screws **6** to adjust the device vertically.

Finally, tighten wall anchor nuts **4** to a torque of 80 Nm.

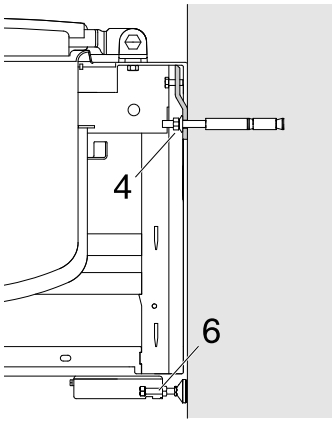

F.9 Sealing

For hygiene reasons, to prevent water and other substances from running under the appliance, seal all around the joints between the appliance and the wall or floor with permanently elastic silicone.

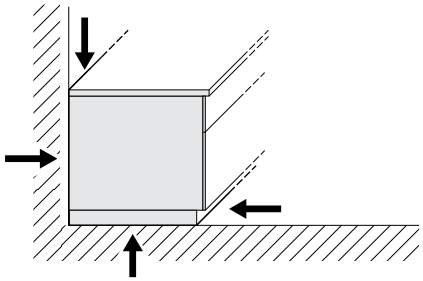

G ELECTRICAL INSTALLATION

WARNING
Refer to "*WARNING AND SAFETY INFORMATION*".

IMPORTANT
If the appliance has the variable speed mode for the stirrer, use type B circuit breakers if residual current circuit breakers are provided.

G.1 Mains connection

WARNING
Refer to A.11 *Electrical connection*.

Each appliance has a specific wiring diagram. It contains the technical specifications (electrical rating, voltage, amperage etc.).

The Installation and Connection Diagram () shows the position of the main terminal board.

It must be possible to block the system in an open position for maintenance purposes, to prevent it from being switched on unintentionally.

Install ahead of the appliance an omnipolar switch of suitable capacity with contact opening distance of at least 3 mm. Install the switch in the building's electrical system, in the immediate vicinity of the appliance.

The mains supply is connected via cable installed during assembly, which protrudes approximately 1,5 m out of the floor or wall.

In case of marine installations: the fluctuation of the voltage must not be higher than ±6 %.

Connect the appliance to an efficient earthing system. For that purpose, the connection terminal block has a terminal with the symbol ⏚ for connecting the earth wire.

The interface for power optimization is in compliance with DIN 18875.

G.2 Power cable

Unless otherwise specified, our appliances are not equipped with a power cable. The installer must use a flexible cable having characteristics not lower than the H05RN-F rubber insulated type.

Connect the AC power cord to the main terminal board using a cable relief, in accordance with the electrical wiring diagram.

G.3 Potential equalisation

The appliance must be connected to a point indicated on a potential equalisation system with a minimum conductor cross section of 10 mm².

When installing multiple appliances, connect them all together through potential equalisation.

1. 6 mm lug
2. M6 nut
3. M6 threaded bolt
4. M6 spring washer
5. M6 washers

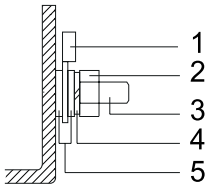

NOTE!
When connecting potential-free contact and energy optimizer it is possible that there is external voltage at the terminals.

G.4 Connect to power supply

1. To connect the appliance, first insert the three phase wires **L1**, **L2**, **L3** into the appropriate terminals and screw them in.
2. Insert and screw the neutral wire into the blue terminal.

IMPORTANT
Not applying to marine versions.

3. Insert and screw the earth wire into the yellow/green terminal.

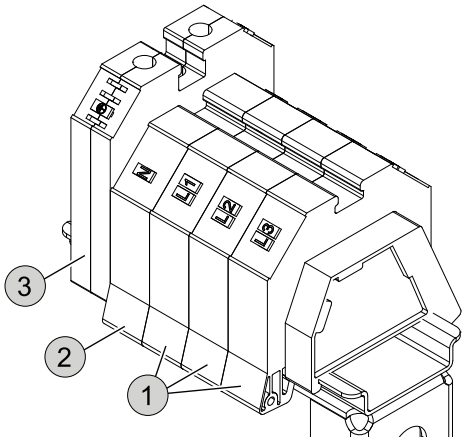

H CONNECTING THE WATER SUPPLY

H.1 Water connection

IMPORTANT
- Carry out the water connection by referring to paragraph A.12 *Water connection*.
- If the water pressure is higher than that specified, use a pressure reducer to avoid damaging the appliance.

For correct installation, the water inlet pipe must be connected to the mains using a mechanical filter and a shutoff valve.

Before connecting the filter, allow a certain amount of water to run in order to clear the pipe of any waste matter.

Connect the appliance with water that has:
- chloride concentration less than 20 ppm. A higher concentration of chlorides can induce localized oxidation phenomena (not covered by warranty);
- hardness between 5 and 25 °fH. Hardness below 5 °fH makes the water undrinkable and hardness above 25 °fH generates limescale deposits that require frequent descaling cycles.

In case the water quality is out of the value ranges reported above, it is advisable to install some water treatment systems.

H.2 Backflow protection

A backflow protection device is required to protect each incoming water connection.

IMPORTANT
Install a single check valve, supplied with the appliance, on the water connection pipe.

H.3 Drinking water supply

The appliance should be connected to fixed lines.

The water connections can be floor mounted.

IMPORTANT
Gain always access to the pipes in accordance with E.4 *Installation and connection diagram*.

1. Feed the hoses through the relevant holes in the base of the appliance frame.
2. Remove the drain tap, the user interface panel and the front panel, refer to paragraph J.2 *Appliance overview*.
3. Connect the flexible hoses with a G 1/2" female thread with a shut-off valve installed, to the water pipes protruding from the floor.
4. Then, re-apply the front panel, the user interface panel and the drain tap.

H.4 Mixing tap

Install the mixing tap on the hole set up by the factory.

Model 1:

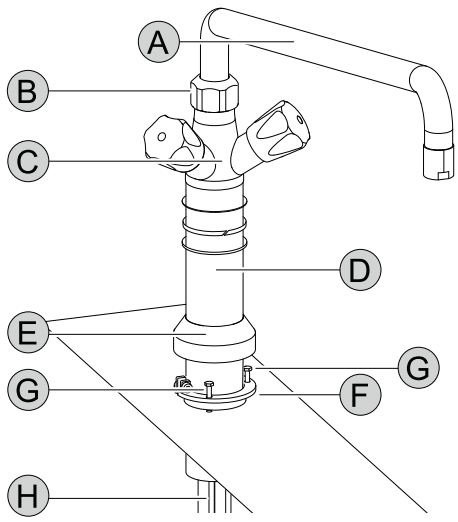

A. Swivel arm
B. Nut
C. Tap body
D. Stand pipe
E. Collar

F. Clamping collar
G. Allen head screw
H. Copper pipes

Installation:

1. Thread the copper pipes **H** and the stand pipe **D** through the pre-drilled hole.
2. Place the support **D** and screw it onto the clamping collar **F** using an allen head screw **G**.
3. Push the collar **E** over the clamping collar **F** and down onto the cover.
4. Fit the swivel arm **A** onto the tap body **C** with the nut **B**.

Model 2:

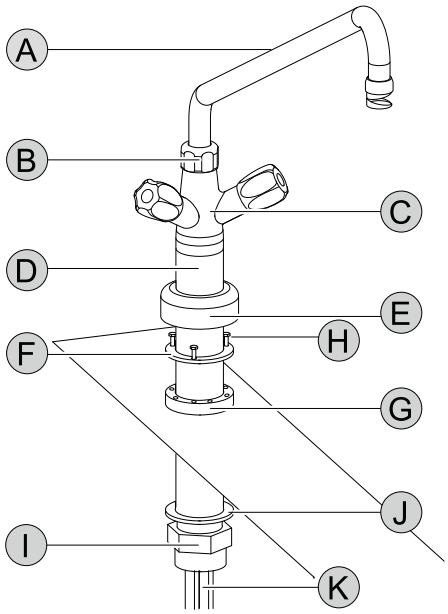

A. Swivel arm
B. Nut
C. Tap body
D. Stand pipe
E. Collar
F. Fixing ring
G. Clamping collar
H. Allen head screws
I. Fixing nut
J. Gasket
K. Copper pipes

Installation:

1. Fasten the clamping collar **G** with the fixing nut **I** and gasket below **J** on the pre-drilled hole.
2. Thread the copper pipes **K** and the stand pipe **D** through the clamping collar **G**.
3. Place the stand pipe **D** and screw the fixing ring **F** onto the clamping collar **G** using the three allen head screws **H**.
4. Push the collar **E** over the clamping collar **G** and down onto the cover.
5. Fit the swivel arm **A** onto the tap body **C** with the nut **B**.

H.5 Water filling automatic

The automatic water filling system, if available on your model, fills up the appliance with a volume of water set by means of the touch panel, refer to K.3.5.4 *Water filling automatic*.

If this option is present, one tap knob is dedicated to automatic water filling and the other is for manual water flow.

You can have an automatic filling of cold water only, or an automatic filling of hot and cold water.

IMPORTANT
Remember that if you want to use the automatic filling function (using the touch panel), the dedicated knob, if present, must be open, otherwise the water cannot flow.

With cold only water filling option:

- The knob dedicated to automatic filling is the **blue** one.
- Through the red knob, you can manually run hot water.

With hot or cold water filling option:

- The knob dedicated to automatic filling is the **red** one.
- If the red knob is open, you can select automatic hot or cold water filling by means of the touch panel.
- Through the blue knob, you can manually run only cold water.

I NORMAL APPLIANCE USE

I.1 Characteristics of personnel enabled to operate on the appliance

The Customer must make sure the personnel for normal appliance use are adequately trained and skilled in their duties.

The operator must:

- read and understand the manual;
- receive adequate training and instruction for their duties in order to operate safely;
- receive specific training for correct appliance use.

IMPORTANT
The Customer must make sure his personnel have understood the instructions received and in particular those regarding work hygiene and safety in use of the appliance.

I.2 Basic requirements for appliance use

- Knowledge of the technology and specific experience in operating the appliance.
- Adequate general basic education and technical knowledge for reading and understanding the contents of the manual, including correct interpretation of the drawings, signs and pictograms.
- Sufficient technical knowledge for safely performing his duties as specified in the manual.
- Knowledge of the regulations on work hygiene and safety.

J PRODUCT DESCRIPTION

J.1 Use

The appliance is intended for industrial use by trained personnel.

This appliance must only be used for its expressly designed purpose, i.e. for cooking, boiling, stewing, steaming food.

Any other use is considered improper.

CAUTION
Do not switch on the appliance when it is empty.

NOTE!
The temperatures required for the cooking processes give rise to intense overheating of some components.
This is not due to a design fault, but is a consequence of the thermal conductivity of stainless steel.

The maximum filling level must not exceed the relevant marking, i.e. not more than 40 mm below the upper edge of the pan.

Refer to A.4 *ProThermetic general safety*.

J.2 Appliance overview

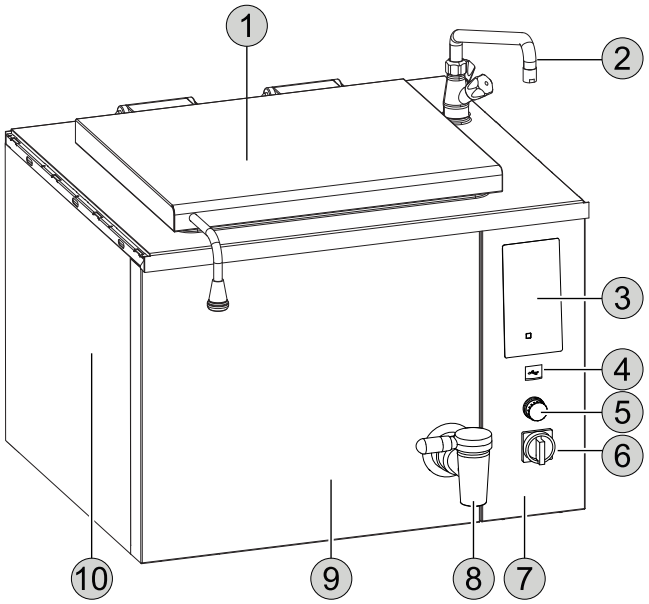

1. Lid
2. Mixing tap
3. Touch control panel
4. USB connection
5. Emergency stop (if available in your model)
6. Main switch (if available in your model)
7. User interface panel
8. Food discharge drainage tap
9. Front panel
10. Side panel

J.3 Control panel

A. Display – Touch screen
B. ON/OFF button
C. USB pendrive in/out

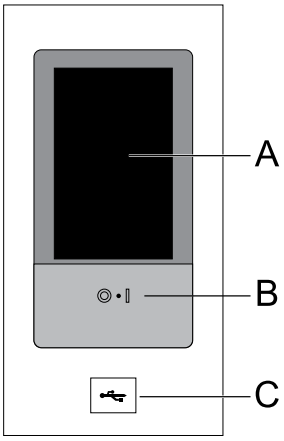

J.4 Double jacket

The appliance has a double jacket where saturated steam is present, which by heating creates the heat necessary for cooking food.

The double jacket is filled in the factory with demineralised water.

Depending on the delivery date (specifically from November to April), the double jacket is delivered emptied and the demineralised water is supplied in a plastic container to prevent frost damage to the heating system.

CAUTION
Before the first use, check the water level in the double jacket and if necessary contact the Customer Service care to fill it with demineralised water.

NOTE!
- The double jacket has an automatic ventilation system and a safety thermostat, which prevents the internal water level from becoming too low.
- A safety valve also prevents overpressure of steam in the double jacket.

J.5 Emergency stop (optional)

Refer to the paragraph J.2 *Appliance overview*.

If present, press emergency stop button to stop the appliance operation immediately.

The entire touch control panel is switched off.

To unlock the emergency stop button turn the switch knob clockwise.

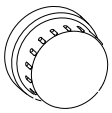

K OPERATING INSTRUCTIONS

K.1 First use

All the appliances are tested in terms of safety and functionality when delivered.

Prior to start operating with the unit, carry out the commissioning according to the specific checklist (refer to “Commissioning Checklist“).

- Clean off any industrial protection grease from all parts of the appliance and accessories before first use.
- To properly perform basic cleaning, note and follow the instructions in L *Appliance cleaning and maintenance*.
- Before first use, fill the appliance with water and heat it at 100°C for 30 minutes. Then allow it to cool completely with the lid open.
- Do not use vegetable oil or fat to treat the pan.
- If present, dismantle the drain tap unit, clean thoroughly with a hot mild cleaning agent, dry and grease lightly with a special odourless, tasteless, food-safe tap grease.

K.2 Switching on/off

Press the proper button:

▯ To switch on the appliance

◎ To switch off the appliance

NOTE!
If present, switch off the appliance completely using the main switch (optional) and all of the displays become inactive.
Refer to the paragraph J.2 *Appliance overview*.

K.3 Touch control panel

K.3.1 Starting page

When the appliance is switched on the display illuminates, loads the software and after a while shows, by default, the starting page in “Manual“ mode.

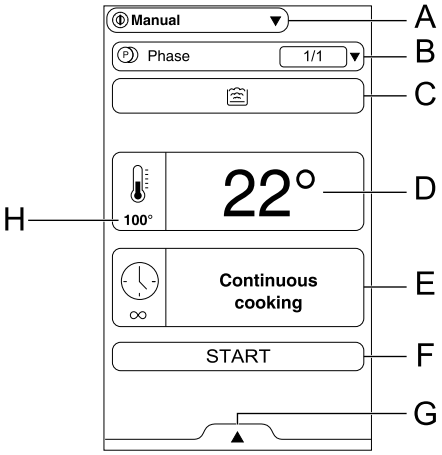

A. Main menu
B. Cooking phase
C. Cooking mode
D. Internal temperature
E. Cooking time
F. Start button
G. Additional functions
H. Set temperature

K.3.2 Main menu

The appliance allows cooking in different cooking modes, store and recall programs.

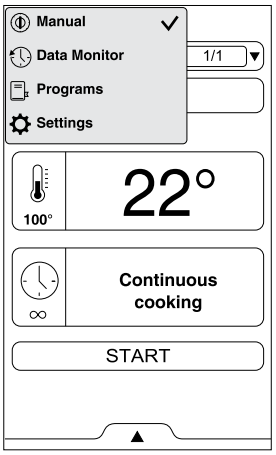

The manual mode customizes the cooking cycles setting the time and temperature or heat power (refer to K.3.3 *Manual mode* chapter).

“Data monitor“ includes only information for Customer Care Service.

Programs mode recalls the recipes previously saved and restores quickly parameters and settings of each cooking cycle avoiding the need to assign them again (see K.3.6 *Programs mode* chapter).

Settings mode allows to customize the appliance functions and options for a better use (refer to K.3.9 *Settings* chapter).

K.3.3 Manual mode

K.3.3.1 Set the required temperature in °C/°F

1. Touch symbol of the temperature value ;
2. Enter the new value on the numeric keypad appearing on the display;
3. Touch the symbol to set the temperature value, or wait for the window to close by itself.

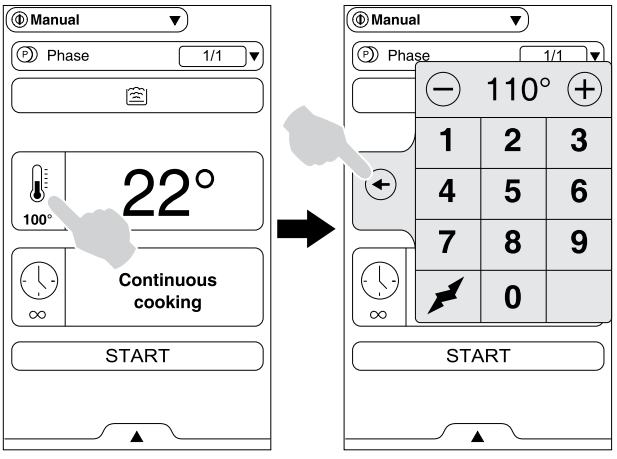

NOTE!
You can choose the temperature between 25°C and 110°C.

K.3.3.2 Set the power levels (where available)

1. Touch symbol of the temperature value ;
2. Touch the symbol of power level on the numeric keypad appearing on the display;

3. Set the power level from 1 to 9: 1 is the minimum and 9 is the maximum;
4. Touch the symbol ⟵ to set the power level.

IMPORTANT

When the cycle starts, the symbol flashes until the set temperature is reached. Then the symbol disappears and the cooking time starts.

K.3.3.3 Set the duration time

1. Touch the symbol of the time value ;
2. Enter the new value on the numeric keypad appearing on the display;
3. Touch the symbol ⟵ to set the duration time.

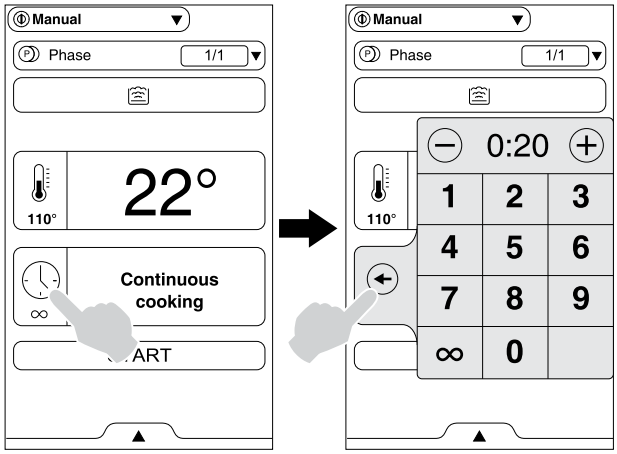

NOTE!
You can also set a continuous cooking by touching the symbol ∞ and then ⟵.

K.3.3.4 Add one or more cooking phases

1. Touch the symbol ▼ to open the phases menu;
2. Add a new phase by tapping the appropriate button;
3. Set temperature and duration as explained in previous paragraphs;

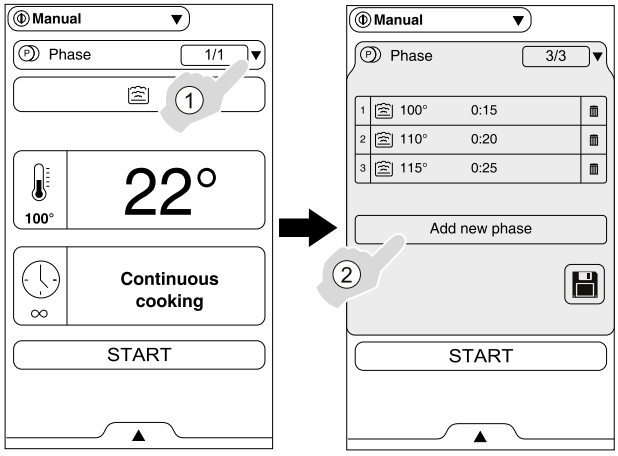

NOTE!
To store the phase sequence in a program, tap the symbol and refer to paragraph K.3.5 *Additional functions*.

K.3.4 Drawer area

The drawer is an expansion located inside several environments of the menu and includes options and functions.

The lower drawer contains further settings, accessory management and advanced features. Its composition depends on the setting parameters and on the phase cycle.



Touch ▲ to open the lower drawer and ▼ to close it.

K.3.5 Additional functions

Touch ▲ to open the lower drawer.

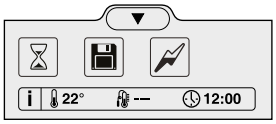

K.3.5.1 Delay start

With this option it will be possible to delay the start of a cycle at a more convenient time.

1. Touch symbol of the delay start;
2. Set the starting time on the appearing keypad;
3. Confirm the delay start time by tapping the start button.

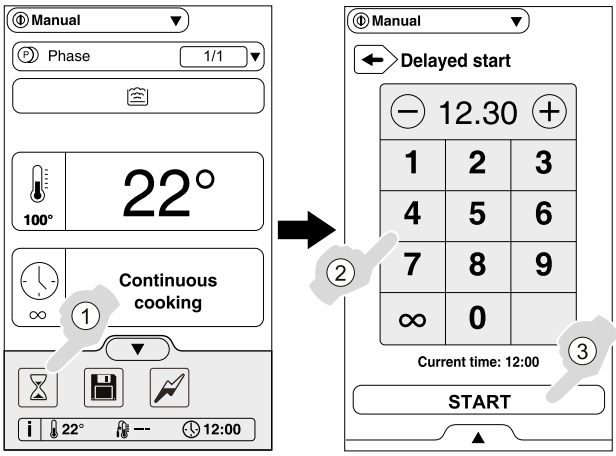

IMPORTANT
At the programmed time the appliance switches on and starts heating to reach the set temperature.

NOTE!

After selecting this function, the icon appears on the main screen.

K.3.5.2 Save program

To save and store customized cooking cycles.

1. In “Manual mode“ set the cooking parameters according to your requirement;
2. Open the lower drawer and touch the relevant icon to save the programme;
3. Edit the program name on the appearing keypad and confirm;
   The new program will be stored in “Programs mode“.

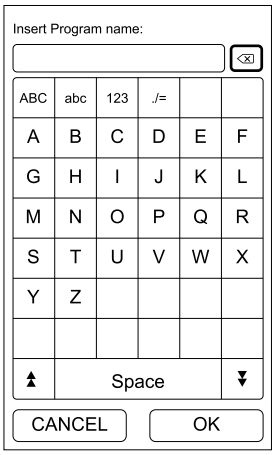

NOTE!
To access the “Programs mode“, refer to paragraph K.3.6 *Programs mode*.

K.3.5.3 Soft cooking

It reduces the power of the cooking cycle, by reaching the set temperature more slowly.
Recommended for delicate foods such as milk, or anything that can burn easily.

The soft cooking function is always arranged in the boiling mode. When the braising cooking mode is available, the function can be activated below 120°C.

1. Touch symbol of the soft cooking;
2. Touch ▼ to close the lower drawer;
3. Start the cycle.

NOTE!
After selecting this function, the icon appears on the main screen.

K.3.5.4 Water filling automatic

If the appliance has the water filling automatic, the proper icons appear in the drawer area.

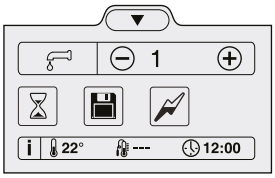

To operate the water filling automatic:

1. Touch ▲ to open the lower drawer;
2. Set the water litres by tapping ⊕ or ⊖.
3. Touch the icon to start water filling.

NOTE!
With hot or cold water filling option you have to choose whether to fill with hot or cold water by touching the red or blue symbol.

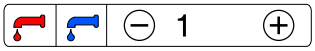

4. Touch ▼ to close the lower drawer;

IMPORTANT
Remember to open the knob for automatic water filling, otherwise the water cannot flow, refer to the paragraph H.5 *Water filling automatic*.

K.3.6 Programs mode

The “Programs Mode“ allows to recall program recipes already stored or to upload/download programs, from or into the appliance by means of the USB pendrive.

- **Choose a saved program:**
  1. Select “Programs mode“ in the main menu;

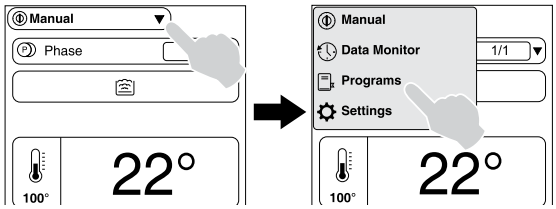

  2. Touch the required program or search it by typing its name near the icon ;



NOTE!
To delete a program touch the icon .

- **Download/upload programs:**
  1. To open the lower drawer touch ▲.
  2. Choose the icon to download programs, or the icon to upload programs.

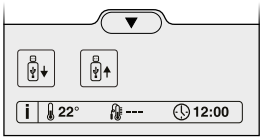

K.3.6.1 Guided cooking programs (if present, depending on your model)

They are preset programs that guide you during cooking cycles by means of hints and pop-ups.

- **Enable guided programs (only the first time):**
  1. After entering “Programs mode“ in the main menu, a pop up appears asking if you want to install the guided programs.

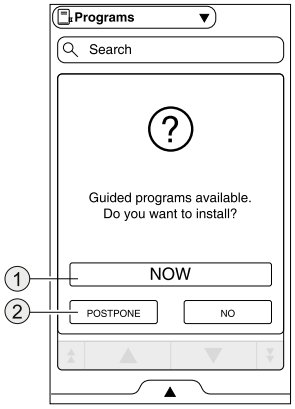

  2. Touch the proper icon if you want to proceed immediately ① or later ②.
     After installation, the display shows the preset guided programs.

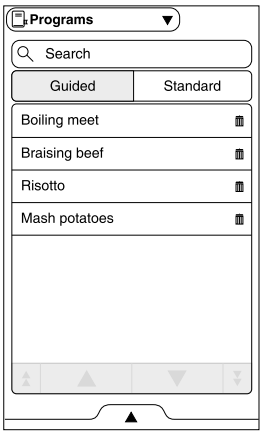

  Now you can edit them, delete them, or make a copy.

  NOTE!
  To restore guided programs refer to paragraph K.3.9 *Settings*.

- **Choice of programs**
  1. Touch the required program or search it by typing its name near the icon 🔍.
  2. A pop-up comes up with a summary of main ingredients for that recipe and if a video is available, a QR code appears and when scanned allows direct access to the video.
  3. Confirm to start the cooking cycle.
- **Water filling automatic** (if present)
  With guided programs, there is the possibility to choose the number of litres of water to be loaded and to be guided in operations through pop-up messages.
  1. Touch ▲ to open the lower drawer before starting the program.
  2. Touch the icon to modify the number of litres of water to be loaded into the appliance in that cycle and confirm.
  3. Touch ▼ to close the lower drawer and start the program.

NOTE!
If you start a guided program as is, a pop-up appears asking if you want to modify the preset features, changing the amount of water to load.

K.3.7 Start a cooking cycle

When a cooking cycle begins, the appliance starts heating up to the set temperature.

If the preheating view is enabled (refer to K.3.9 *Settings*) and available for your model, the display shows the following screen:

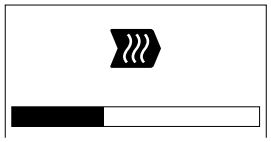

Then it is possible to introduce food.

The cooking time starts when the set temperature is reached.

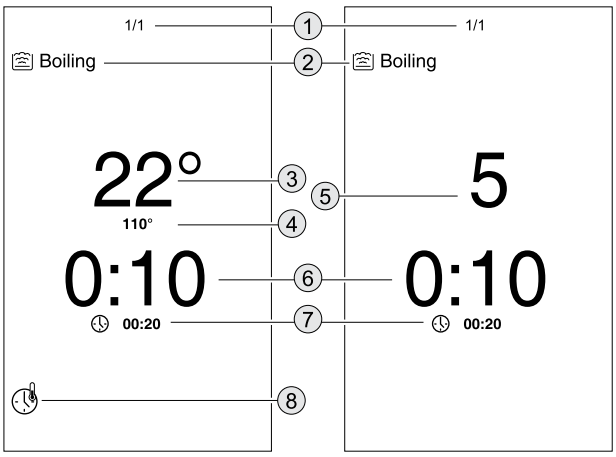

Set temperature ***Set power levels***

1. Current cooking phase number
2. Current cooking mode
3. Current food temperature
4. Set temperature
5. Set power level
6. Remaining time
7. Set cooking time
8. Icon present until the set temperature is reached

More options after starting a cycle

A. **To stop a cycle** before the set time:
touch on the display and then on the “**A**“ button.

B. **To skip the current cooking phase**:
if the cycle has multiple phases, you can skip the current phase by touching on the display and then on ▶| icon.

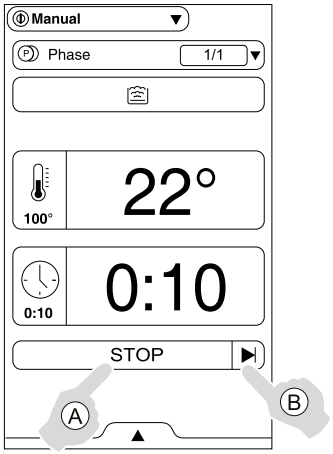

NOTE!
If **B** function is available for your model, enable it referring to K.3.9 *Settings* paragraph, otherwise:

1. Touch the symbol ▼ to open the phases menu;
2. Touch the symbol |◀ to skip the current phases.

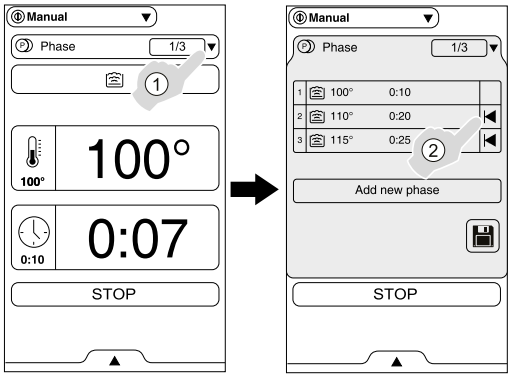

K.3.8 End cycle

When a cooking cycle ends, touch “OK“.



K.3.9 Settings

“Settings“ mode allows to change some usage parameters of the appliance.

1. Select “Settings“ in the main menu;

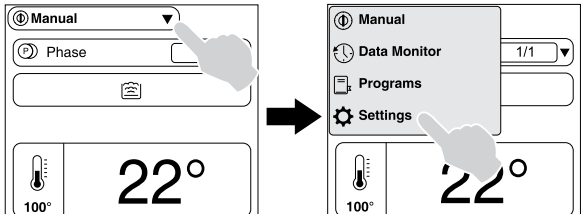

2. The display shows the main menu with settings:

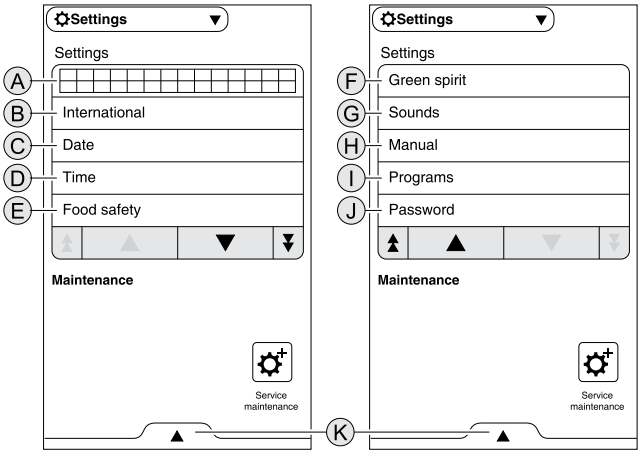

▼▲ scroll buttons

⏬⏫ start/end buttons of scrolling

Service maintenance
This environment is only allowed to an authorized technician.

A. **Language**
This parameter allows to customize all menus in the selected language.
- Touch the strip with flags
- Scroll up or down to find the required language
- Touch ⇦ to return to the “Settings“ menu.

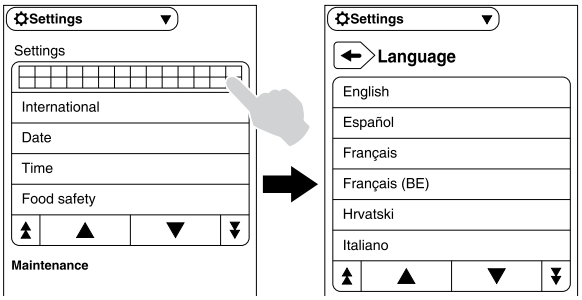

B. **General settings**
This function allows to set a lot of parameters:
- Language: refer to point “A“;
- Date format: DD/MM/YYYY etc.
- Time format: 24H / 12H;
- Temperature measure unit: °C / °F.
- Touch ⇦ to return to the “Settings“ menu.

C. **Date**
This setting allows to set the current date.
- Set the date by tapping ⊕ or ⊖.
- Touch ⇦ to return to the “Settings“ menu.

D. **Time**
This setting allows to set the current time.
- Set the time by tapping ⊕ or ⊖ or by touching the corresponding number on the keypad.
- Touch ⇦ to return to the “Settings“ menu.

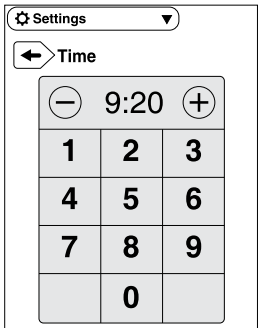

E. **Food safety**

The HACCP feature allows the storage of all the set values identifying a cooking process, and their variation, the cavity temperature and, when used, the food core temperature at specific intervals.

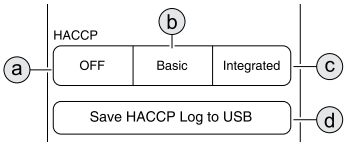

a. Enable / disable HACCP;
b. HACCP available with USB key;
c. HACCP available with integrated kit;
d. To save HACCP values in the USB key.

In “boiling“ mode it records the food temperature from the side sensor.

In “braising“ mode it records the temperature of the bottom plate.

F. **Green Spirit**

This setting allows to set after how many minutes (or seconds) the display enter in standby mode, or to disable the standby mode:

- Touch the arrow ▶ to open the menu;
- Tick the square to set the time for standby mode;
- Set the time and click on “OK“ to confirm.

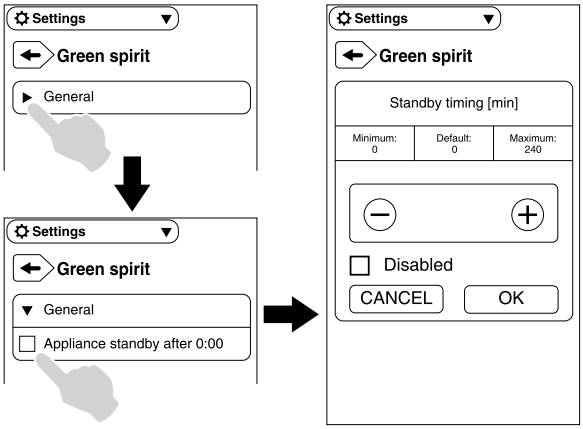

NOTE!
To turn on the display after standby mode, touch it anywhere.

G. **Sounds**

This setting allows to enable / disable sounds and to set the volume level.

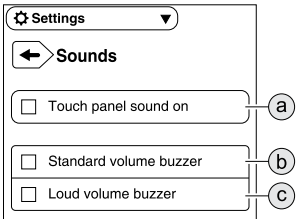

a. Enable / disable touch panel sounds
b. Standard volume
c. Loud volume

Touch ⇦ to return to the “Settings“ menu.

H. **Manual**

This setting allows to enable / disable the manual cooking mode and its options:

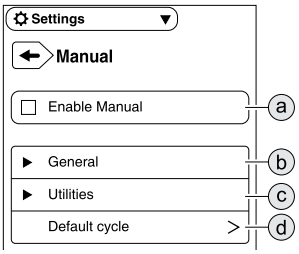

a. Enable / disable manual mode: if manual mode is disable, only saved programs are available.
b. General:
   - To show or hide real and set values;
   - To enable / disable cooking phases;
   - To enable / disable the delay start;
   - To enable / disable the preheating phase view;
   - To enable / disable phase skip on the start button.
c. Utilities: to show / hide the cooking information in the lower drawer.

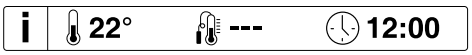

d. Default cycle: to set the cycle of the starting page.

Touch ⇦ to return to the “Settings“ menu.

I. **Programs**

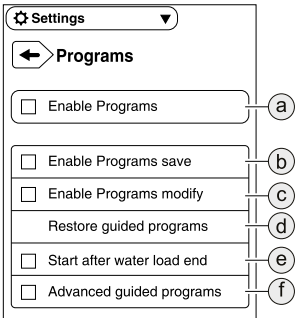

a. Enable / disable programs;
b. Enable / disable the possibility to save programs;
c. Enable / disable the possibility to modify programs;
d. To restore the guided cooking programs;
e. In the case of automatic water filling, you can enable / disable the cycle to start automatically once the amount of water has been loaded;
f. To enable/disable pop-ups for advanced functions or more specific steps in guided programs, such as a step to maintain the desired temperature at the conclusion of a guided program.

Touch ⇦ to return to the “Settings“ menu.

J. **Password**

This setting allows to set, change or remove the password: if enabled, it prevents manual modification of some functions (for example by unintentional touches or unauthorized people).

K. **Additional setting**

Open the lower drawer and select the related icon:

Download/upload programs

Refer to K.3.6 *Programs mode*.

Default setting

If it is required to restore the factory setting, proceed as follows:

- Open the lower drawer and select the related icon;
- Confirm restoring to close the pop-up window.

Touch screen calibration

This setting allows to set the calibration of the screen.

- Touch the screen as close as possible to the centre of the red cross;
- Repeat until the cross turns green;
- Touch and hold to exit.

K.3.10 Alarm messages

Any errors or alarms and their brief description are shown on the display with the icon .

An acoustic signal is played simultaneously.

K.3.11 Preventive maintenance

If available for your model, an alert can be set, which informs you when it is time for maintenance based on the number of cooking cycles, hours the appliance has been in operation, or days/months passed. Refer to the Service Manual or contact Customer Care Service.

K.4 Connectivity kit

If the connectivity kit is present, connect the Ethernet cable and check in the touch panel settings that parameter no. 40 is set correctly, refer to the “Parameter Setting“ document.

First remove the user interface panel referring to E.5 *Accessing the appliance’s internal components*.

Then insert the Ethernet cable into the factory-fitted connector.

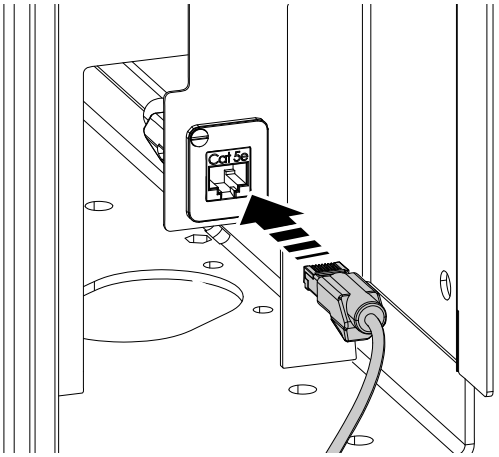

Fig. 1 Ethernet cable into connector

IMPORTANT
If the appliance has feet, insert the Ethernet cable through the cable gland already mounted:

1. Remove the cable gland from its position.

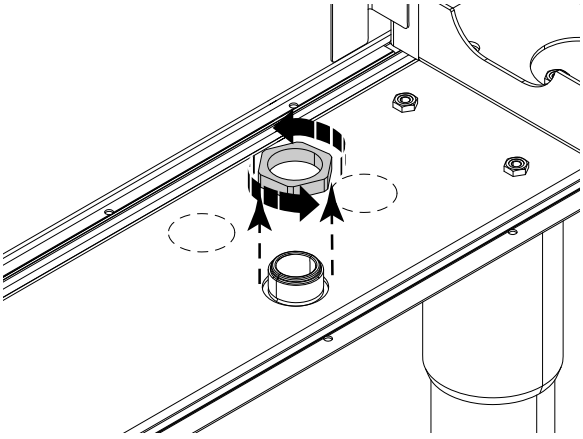

2. Place the Ethernet cable inside the cable gland.

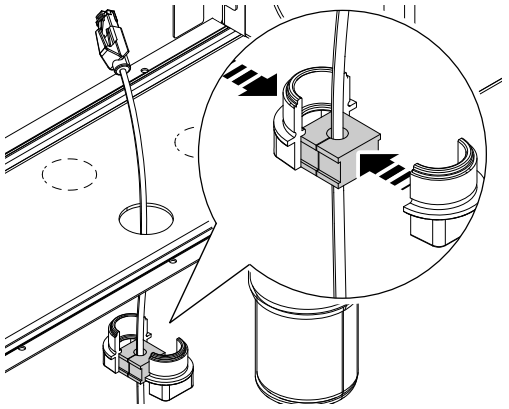

3. Reassemble the cable gland in its original position.

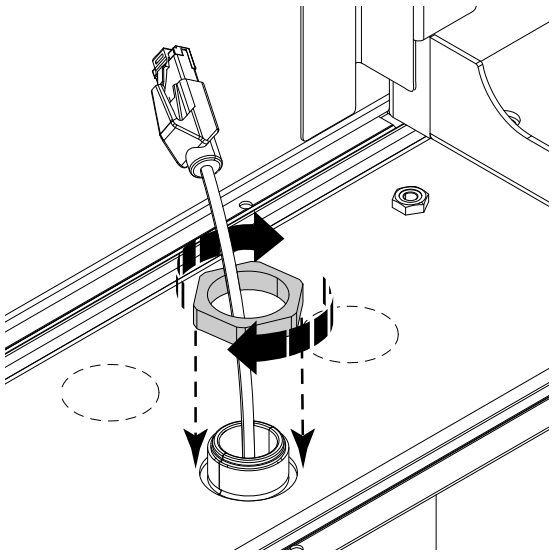

4. Insert the Ethernet cable into the factory-fitted connector, refer to Fig. 1 *Ethernet cable into connector*.
5. Remount the user interface panel.
6. Through the touch panel, enter in “Settings“ mode (referring to K.3.9 *Settings*) and tap on .
7. Insert the password, refer to the Service Manual or “Parameter Settings“ document.
8. Click on “Appliance parameters“ and then scroll down until you reach parameter no. 40.

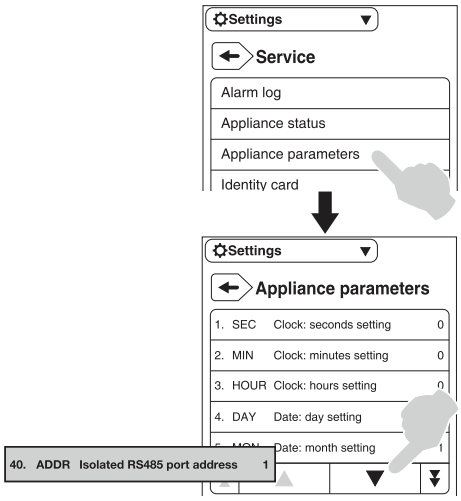

9. Set parameter no. 40 according to the "Parameter Setting" document.

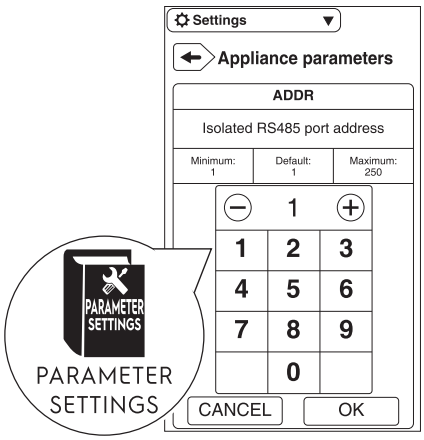

NOTE!
To check if all parameters are set correctly, refer to the “Parameter Settings“ document.

K.5 Drain tap

The drain tap (if present) is used to drain the cooked food with a specific dosage.

If the handle is on the left, the drain tap is closed, otherwise if it’s on the right, the tap is open.

WARNING
In pressure appliances, never open the drain tap under pressure. Before operating the drain tap, open the lid to release pressure.

IMPORTANT
Do not remove the cover of the drain tap when emptying food / liquid.

K.5.1 Opening the drain tap

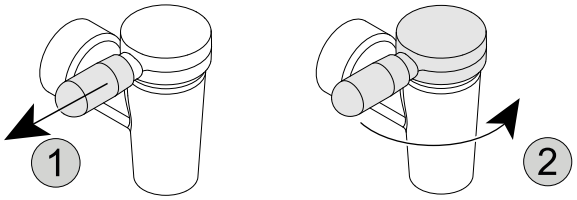

1. Hold the handle of the cover and pull it gently to unlock it.
2. Turn the handle completely to the right.

To close the drain tap, turn the cover with the handle from the right to the left.

K.5.2 Dismounting the drain tap

Turn the drain tap counter-clockwise and remove it.

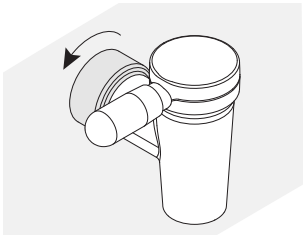

K.5.3 Dismounting the drain tap cover

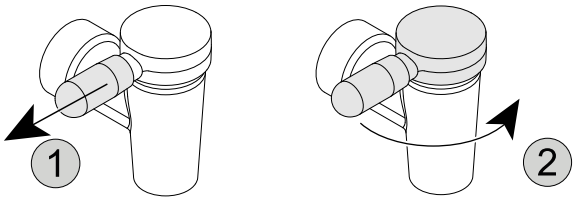

1. Hold the handle of the cover and pull it gently to unlock it.
2. Turn the handle completely to the right.

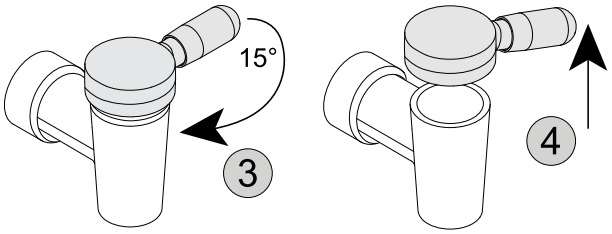

3. Turn again the handle a little to the left (about 15°).
4. Lift the cover of the drain tap with the handle.

To mount the drain tap cover proceed in reverse order.

L APPLIANCE CLEANING AND MAINTENANCE

WARNING
Refer to “*WARNING AND SAFETY INFORMATION*“.

L.1 Care information

Care operations have to be carried out by the owner and/or user of the appliance.

IMPORTANT
Problems resulting from poor or lack of care as hereinafter described will not be covered by the warranty.

L.2 Cleaning introduction

To help reduce environmental impact, we recommend using Electrolux Professional cleaning products designed with sustainability and biodegradability in mind.

If another type of detergent is used, carefully follow the producer’s instructions and observe the safety rules given in the information sheets provided with the product or substance.

CAUTION

- Do not use solvent-based detergents (e. g. trichloro-ethylene) or abrasive powders for cleaning.
- Do not use steel brushes, steel wool, copper cloths, sand-based or similar products for cleaning.
- Only start cleaning once the appliance has cooled.
- Do not clean the appliance with flammable liquids.

Accessories such as baskets and containers, if present, must be cleaned outside of the appliance.

WARNING
When using chemicals, comply with the safety notes and dosage recommendations printed on the packaging. Refer to the chapter A.2 *Personal protection equipment* for handling chemical products.

L.3 Stainless steel surfaces

The reason stainless steel can resist corrosion and rust is its passive layer which builds up when oxygen hits the metal surface. There is sufficient oxygen in the air to do this.

If this passive layer is physically broken or damaged by chemical substances, leaving it unable to regenerate itself, even rust-free stainless steel can be subject to corrosion.

It is possible to develop or regenerate the passive layer by treating it with running, oxygen-rich water.

Oxygen-starving abrasives such as hydrochloric acid, chlorides and spice concentrates, mustard, vinegar essences, spice cubes and cooking salt solutions can lead to chemical damage or rupture of the passive layer, depending on the concentration and temperature.

Extraneous rust (iron particles), the formation of galvanic elements and lack of oxygen could cause more damage.

IMPORTANT
Keep stainless steel surfaces clean at all times and make sure they are well ventilated.

Please follow these instructions:

- Remove grime, fat and other cooking residuals from steel surfaces when cool using soapy water, with or without detergent, and a cloth or sponge.
  Dry the surfaces thoroughly after cleaning.
- In case of encrusted grime, fat or food residuals, go over with a cloth or sponge, wipe in the direction of the satin finish and rinse often.
  Rubbing in a circular motion combined with the particles of dirt on the cloth/sponge could spoil the steel's satin finish.
- Metal objects can spoil or damage the steel: damaged surfaces become dirty more easily and are more subject to corrosion.
- Restore the satin finish if necessary.
- Do not let stainless steel parts come into prolonged contact with acids, spices, salts, etc. Even acid fumes which build up from cleaning tiled surfaces can promote corrosion.
  Rinse off work surfaces with fresh water. This applies especially after cooking potatoes, pasta or rice in salted water.

L.4 Daily cleaning

CAUTION

- Do not use a high-pressure cleaner to clean the floor directly in front of, next to and behind the appliance.

Control panel

- Clean the control panel with a soft cloth dampened with water and, if necessary, with neutral detergent.

External surfaces

- Wash the external surfaces with warm, soapy water.
- Avoid using detergents containing abrasive substances, steel wool, brushes or steel scrapers.
- Rinse with a damp cloth and dry carefully.
- Avoid using chlorine or ammonia-based products.

Tank

- Remove any residuals of food, grime, fat, other cooking residuals and starch from the tank and baskets using boiled water on a daily basis adding a degreasing cleaning agent if necessary.
- Carefully dry the tank and baskets to avoid the stagnation of liquids.

L.5 Drain tap

If the cooking appliance has a drain tap, this must be cleaned and grease every day after the last use of the appliance, depending on the frequency of use:

- dismantle the drain tap unit, refer to the paragraph K.5 *Drain tap*;
- clean with a mild cleaning agent;
- dry and grease lightly with a special odourless, tasteless grease:
  We recommend:
  – grease for taps and fittings (for taps with seal/O ring) = code 0S2118.
  – lubricant for taps with metal seals (for taps without seal/O ring) = code 0S2277.

L.6 Descaling

WARNING
Refer to "*Personal protection equipment*".

IMPORTANT
Remove limescale, fat, starch and protein layers with regular cleaning to avoid corrosion.

- Use a solution of 10% vinegar, 10% phosphoric acid or a suitable de-scaling solution available for purchase.
- Never use steel wool or other abrasive materials which can scratch the surface of the stainless steel.

WARNING
Make sure no water comes into contact with electrical components.

L.7 Periods of non-use

If the appliance is not going to be used for some time, take the following precautions:

- close the water supply tap(s), if present;
- disconnect the power supply or remove the plug from the power socket, if present;
- carefully clean the internal parts of the appliance;

- clean the cabinet, going over all the stainless steel surfaces vigorously with a rag moistened with paraffin oil to create a protective film;
- for the electric heated models: switch on the appliance at the minimum rate of heat for at least 45 minutes; this will allow moisture/humidity accumulated into the heating elements to evaporate without damaging the elements;
- never store the appliance where the temperature can drop below 0°C [32°F];
- periodically air the premises.

IMPORTANT
The warranty does not cover any damages caused by ice formations in the appliance pipes.

L.8 Informations for maintenance

Preventive Maintenance reduces downtime and maximizes machines efficiency.

Customer Care Service can provide advice on the best maintenance plan to be purchased based on the intensity of use and the age of the equipment.

During service, repair and maintenance work, distractions and stress factors must be avoided.

As such, unauthorised persons must be kept away from the appliance.

IMPORTANT
- Repairs and service on the appliances must be carried out when heating elements have cooled down.
- Any internal electrical wiring in the appliance and the connections to the earth cable are in accordance with the respective wiring diagrams and must not be modified.
  All metal parts which have electrical connections on them must remain earthed.
- After completion of the maintenance and repair work, the service technician must carry out checks to ensure all operating modes of all functional and safety components are in accordance with the operating instructions.

L.9 Maintenance intervals

It is advisable to carry out the checks with the frequency given in the following table:

Maintenance, inspections, checks and cleaning	Frequency	Responsability
Ordinary cleaning • general cleaning of appliance and surrounding area	• Daily	• Operator
Mechanical parts • check the mechanical parts, for cracks or deformations, tightening of screws: check the readability and condition of words, stickers and symbols and restore if necessary • if present, check hydraulic system condition, e. g. leakages	• According to the message prompted by the display / At least once a year	• Service
Electrical components • check the electrical components inside the appliance • check wirings and connections	• According to the message prompted by the display / At least once a year	• Service
General appliance overhaul • check all components, electrical equipment, corrosion, pipes…	Every 10 years[1]	• Service
Appliance internal cleaning • remove any deposits of dirt inside the appliance.	• According to the message prompted by the display / At least once a year	• Service

1. The appliance is designed and built for a duration of about 10 years. After this period of time (from commissioning) the appliance must undergo a general inspection and overhaul.

M TROUBLESHOOTING

M.1 Introduction

Certain faults may occur during normal use of the appliance. In some cases, faults can be eliminated easily and quickly by following the indication below.

The display, if present, always shows a warning message or alarm describing the occurring fault.

⚠	Warnings icon
⊗	Alarms signalling icon

If the fault persists, contact the Customer Care Service:

1. Disconnect the appliance from the main power supply;
2. Switch off the safety circuit breaker ahead of the appliance;
3. Close the gas and water tap(s), if they are present;
4. Remember to specify:
   - the type of fault
   - the appliance PNC (product number code)
   - the Ser. No. (appliance serial number).

IMPORTANT
The appliance PNC and serial number are essential for identifying the type of appliance and date of manufacture.

M.2 Troubleshooting

Anomaly	Possible causes	Actions
Double jacket		
Insufficient water in the double jacket	• Faulty seals • Leaking or faulty safety valves, deaeration valves and check valve • Faulty control electronics • Blocked or fused contactors	Contact Customer Care Service to fill it
Alarm messages on the touch panel		
EOTS1 –Internal sensor overtemperature	• The pan is empty or poorly loaded • Connectors issue	Fill food in the pan and/or cool food before cooking
EOTS2 – Internal sensor overtemperature	Double jacket low water level	Cool the appliance before cooking
EOTS3 – Internal sensor overtemperature	Wrong sensor connection	Cool the appliance before cooking
ESCH – Temperature too high on electronic power board	• Ambient temperature too high • Electromechanics compartment heated by another appliance installed by the side.	Allow appliance to cool before cooking. If error persist, contact Customer Care Service
EWFA – Lack of water	• Missing water supply • Failure on water electrovalve • Failure on water fluxmeter	Verify water inlet or outlet. If error persist, contact Customer Care Service

N APPLIANCE DISPOSAL

WARNING
Refer to "*WARNING AND SAFETY INFORMATION*".

N.1 Procedure regarding appliance disposal

N.1.1 Recyclability

Our appliances are manufactured using a significant percentage of recyclable metals (such as stainless steel, mild steel, aluminium, galvanized sheet, copper, etc.), which can be recovered through the local recycling systems, in compliance with the regulations in force in the country of use.

National regulations regarding waste disposal may vary. Disposal of the appliance must therefore be carried out in accordance with the applicable legislation and the directives issued by the competent authorities in the country where the appliance is decommissioned.

The components of the appliance must be separated and disposed of in accordance with their material composition (e.g. metals, oils, greases, plastics, rubber, refrigerant gases, insulating boards and other insulating material, glass wool, LEDs, etc.) and in full compliance with applicable local and international waste management regulations.

N.1.2 Procedure regarding appliance disposal and component / material recovery

This product should not simply be disposed of in the environment at the end of its life cycle; it is imperative instead either to dispose of it in accordance with local environmental regulations, or, preferably, to deliver it whole to an authorized recycling center.

The dismantling/recycling center will apply state of the art technologies and methods available to them to effectively disassemble the products for best recyclability.

Note that printed circuit boards, electrical motors or other components identified in European Union legislation to be of high critical raw materials recovery potential need to be addressed specifically.

In case of doubts or questions, always refer to your reference customer care service.

Before disposing of the appliance, make sure to remove any food and organic residues. Carefully inspect its physical condition and preservation state, checking for potential leaks of liquids or gases, as well as for broken parts that may pose hazards during handling and subsequent dismantling.



The symbol on the product indicates that this product should not be treated as domestic waste, but must be correctly disposed of in order to prevent any negative consequences for the environment and human health. For further information on the recycling of this product, contact the local dealer or agent, the customer care service or the local body responsible for waste disposal.

NOTE!
When dismantling the appliance, any marking, this manual and other documents concerning the appliance must be destroyed.

CE

Electrolux Professional SPA
Viale Treviso 15
33170 Pordenone
www.electroluxprofessional.com