Electrical and Gas COMBI oven

Touch and Digital

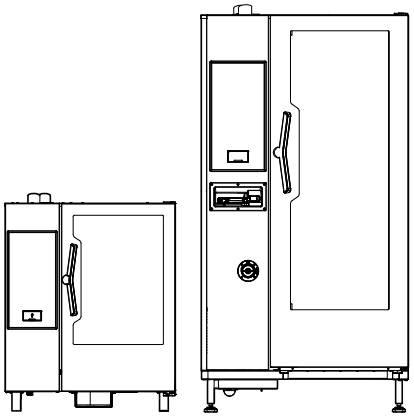

EN-US Installation manual

595407N00- 2026.05

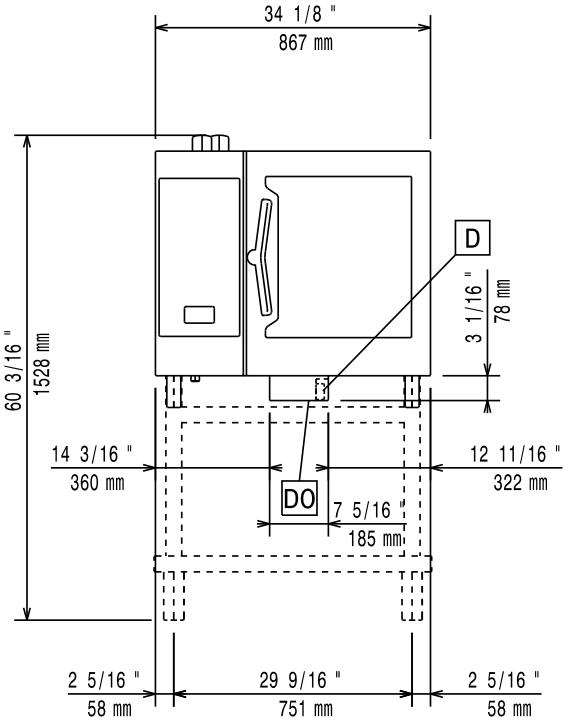
34 1/8 "
867 mm
60 3/16 "
1528 mm
D
3 1/16 "
78 mm
14 3/16 "
360 mm
12 11/16 "
322 mm
DO
7 5/16 "
185 mm
2 5/16 "
58 mm
29 9/16 "
751 mm
2 5/16 "
58 mm

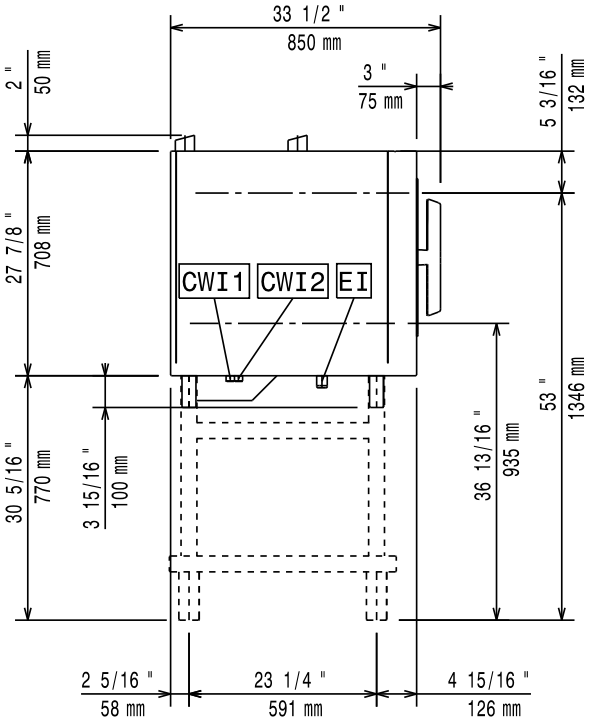
33 1/2 "
850 mm
2 "
50 mm
3 "
75 mm
5 3/16 "
132 mm
27 7/8 "
708 mm
CWI1
CWI2
EI
30 5/16 "
770 mm
3 15/16 "
100 mm
36 13/16 "
935 mm
53 "
1346 mm
2 5/16 "
58 mm
23 1/4 "
591 mm
4 15/16 "
126 mm

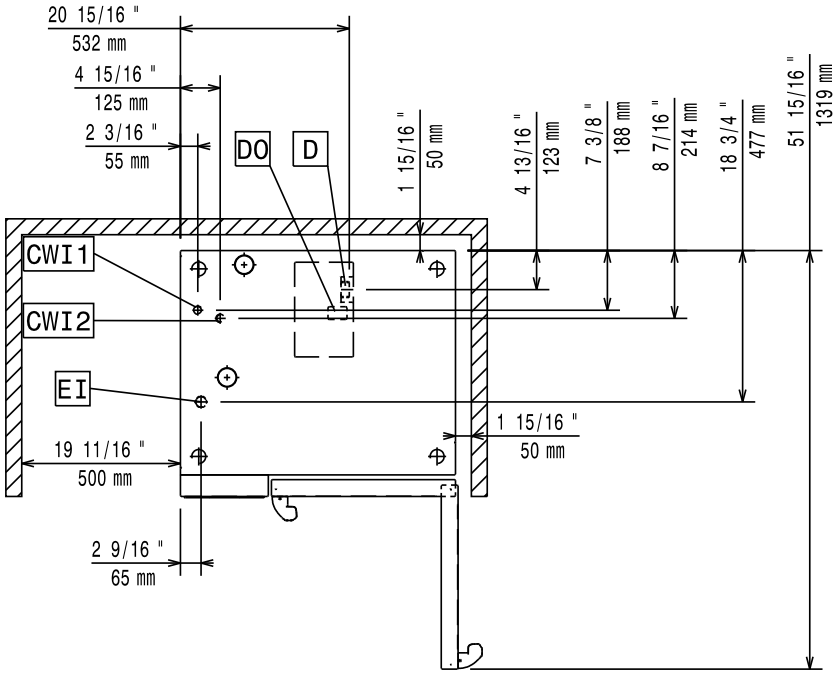
20 15/16 "
532 mm
4 15/16 "
125 mm
2 3/16 "
55 mm
DO
D
1 15/16 "
50 mm
4 13/16 "
123 mm
7 3/8 "
188 mm
8 7/16 "
214 mm
18 3/4 "
477 mm
51 15/16 "
1319 mm
CWI1
CWI2
EI
1 15/16 "
50 mm
19 11/16 "
500 mm
2 9/16 "
65 mm

Installation diagram

6 Grids 1/1 Gas model – with boiler – Touch and Digital

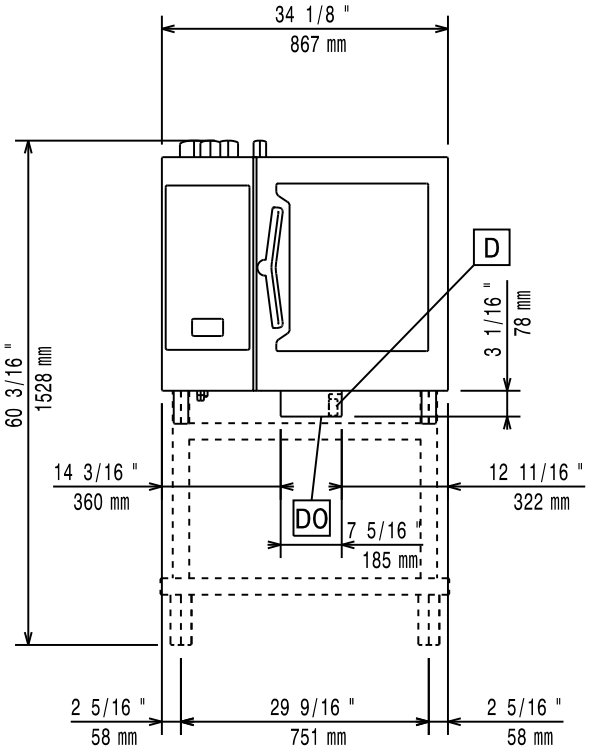

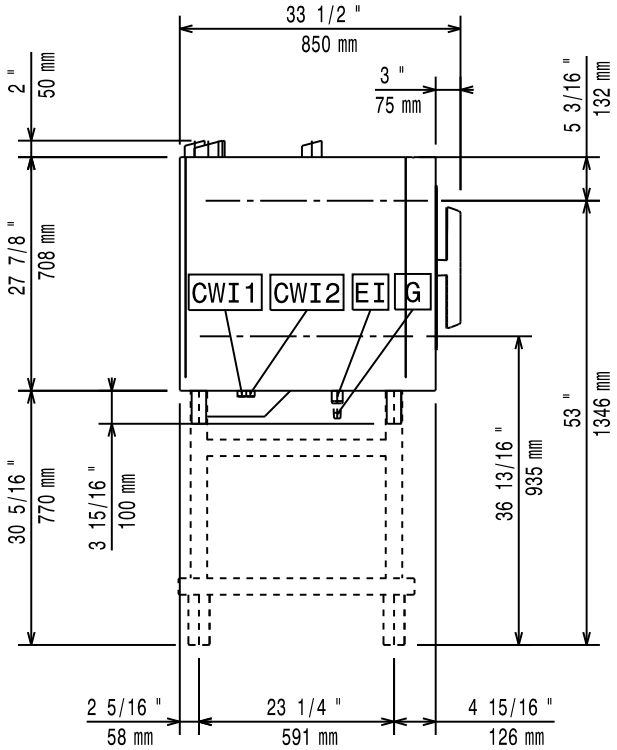

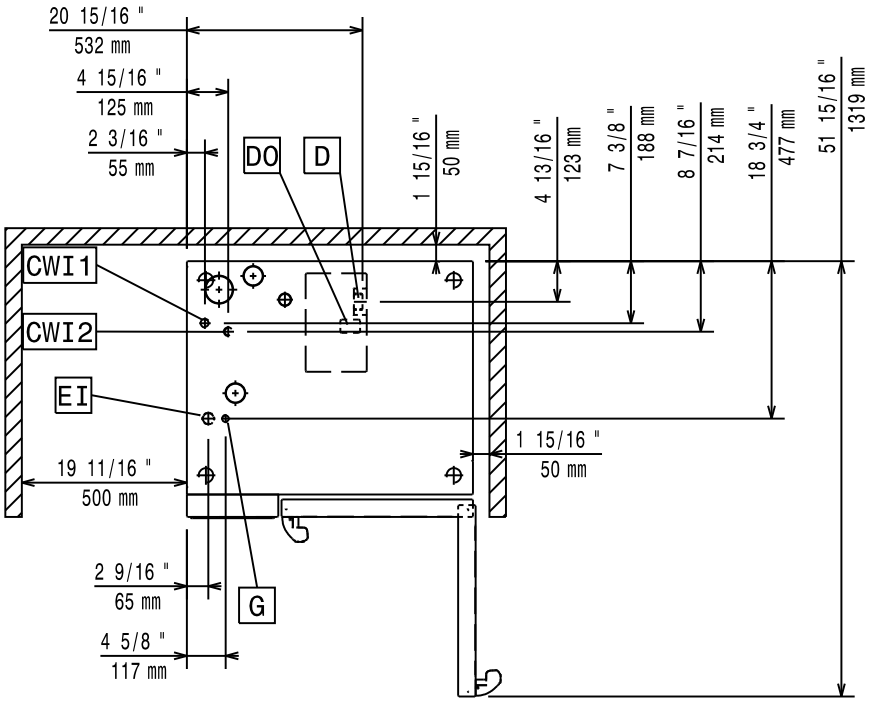

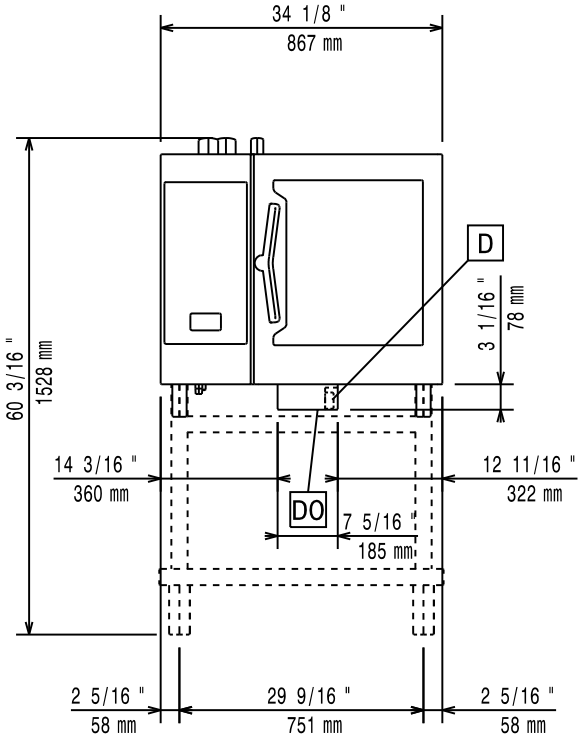
34 1/8 "
867 mm
60 3/16 "
1528 mm
D
3 1/16 "
78 mm
14 3/16 "
360 mm
12 11/16 "
322 mm
DO
7 5/16 "
185 mm
2 5/16 "
58 mm
29 9/16 "
751 mm
2 5/16 "
58 mm

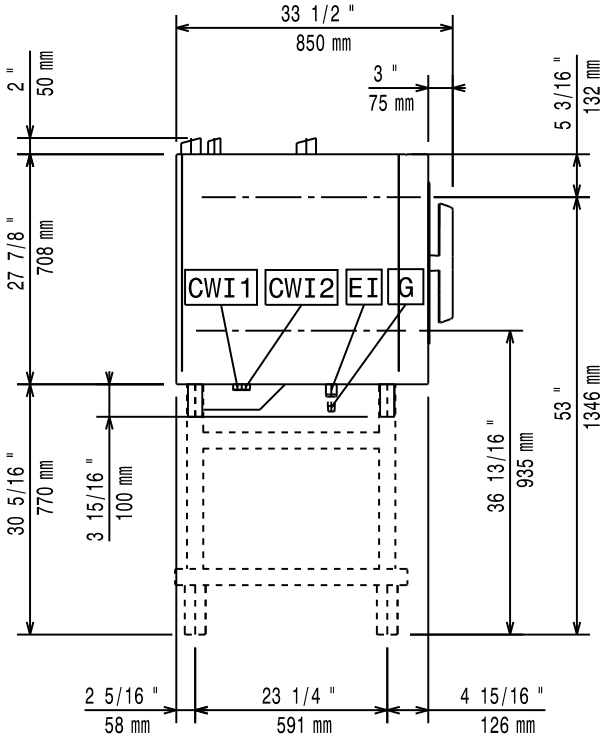
33 1/2 "
850 mm
2 "
50 mm
3 "
75 mm
5 3/16 "
132 mm
27 7/8 "
708 mm
CWI1
CWI2
EI
G
53 "
1346 mm
30 5/16 "
770 mm
3 15/16 "
100 mm
36 13/16 "
935 mm
2 5/16 "
58 mm
23 1/4 "
591 mm
4 15/16 "
126 mm

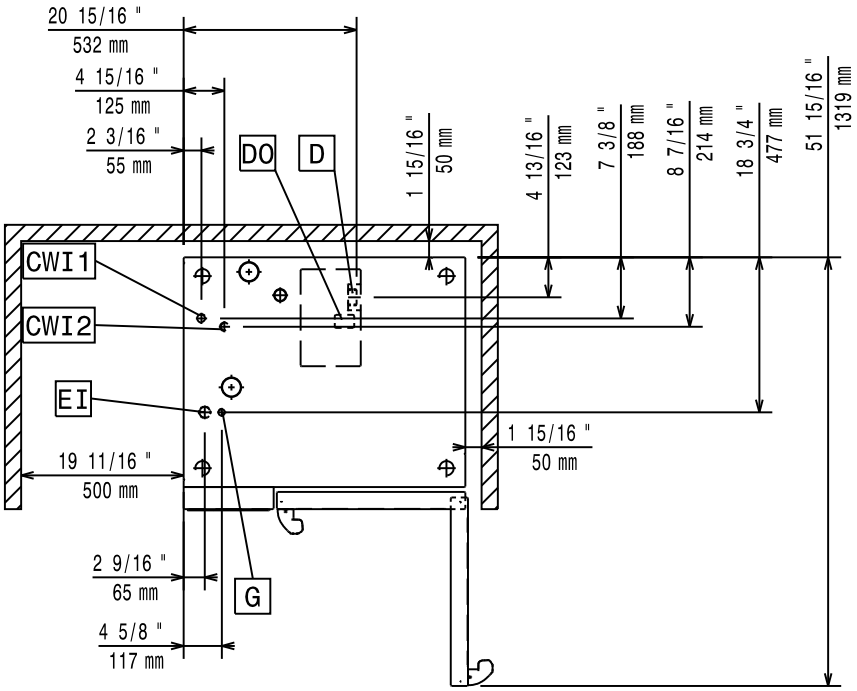
20 15/16 "
532 mm
4 15/16 "
125 mm
2 3/16 "
55 mm
DO
D
1 15/16 "
50 mm
4 13/16 "
123 mm
7 3/8 "
188 mm
8 7/16 "
214 mm
18 3/4 "
477 mm
51 15/16 "
1319 mm
CWI1
CWI2
EI
1 15/16 "
50 mm
19 11/16 "
500 mm
2 9/16 "
65 mm
G
4 5/8 "
117 mm

Installation diagram

6 Grids 2/1 Electric model – with boiler and boilerless – Touch and Digital

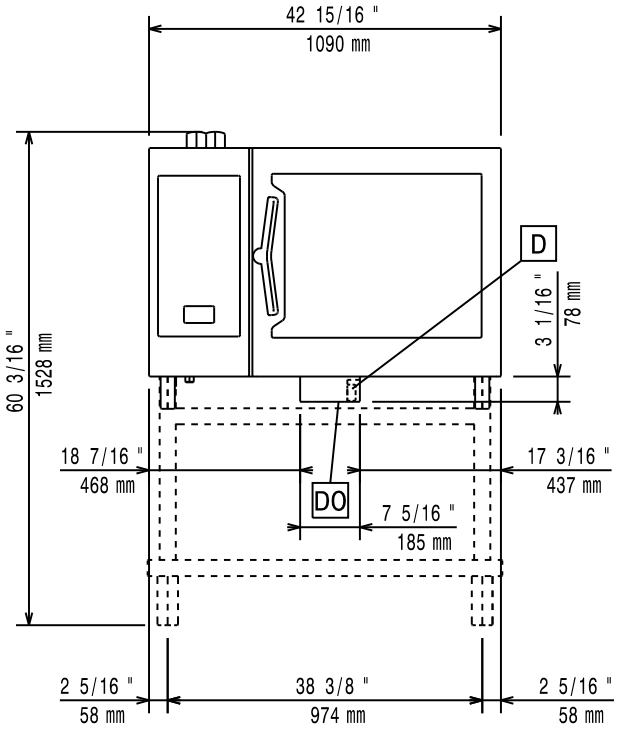

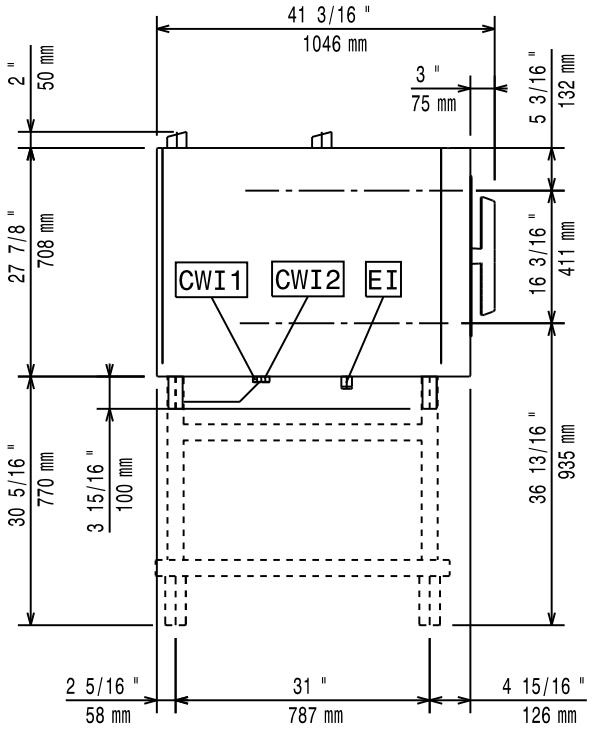

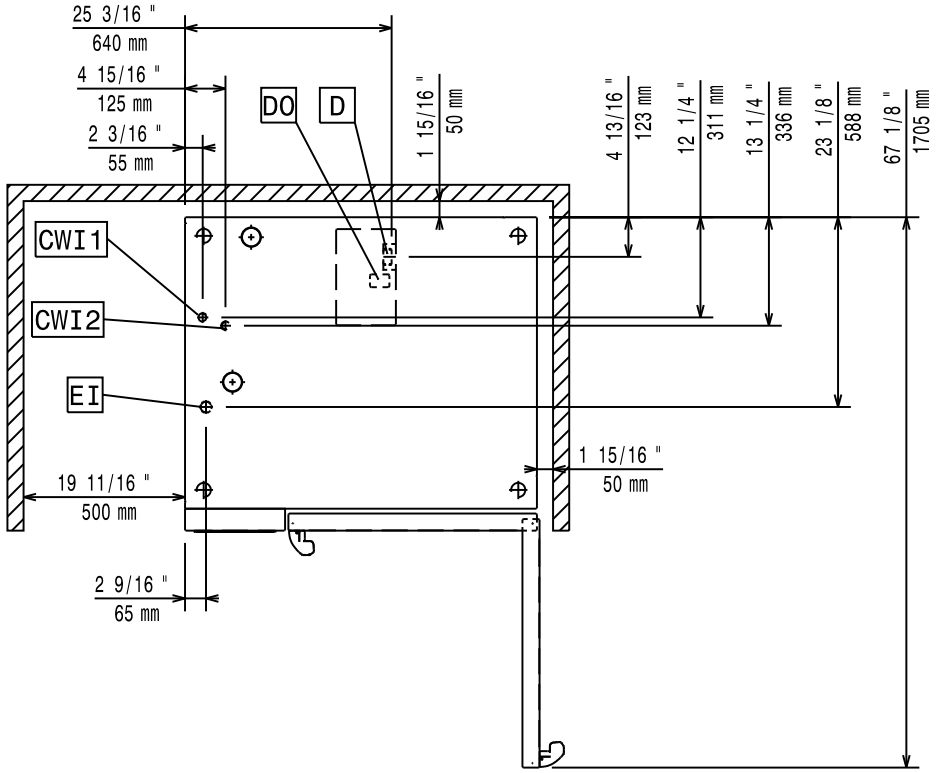

Installation diagram

6 Grids 2/1 Gas model – with boiler – Touch and Digital

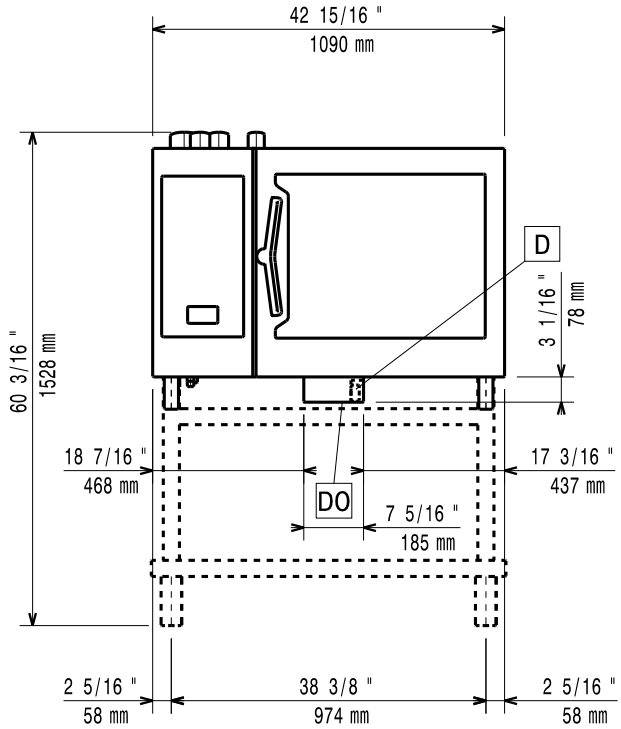

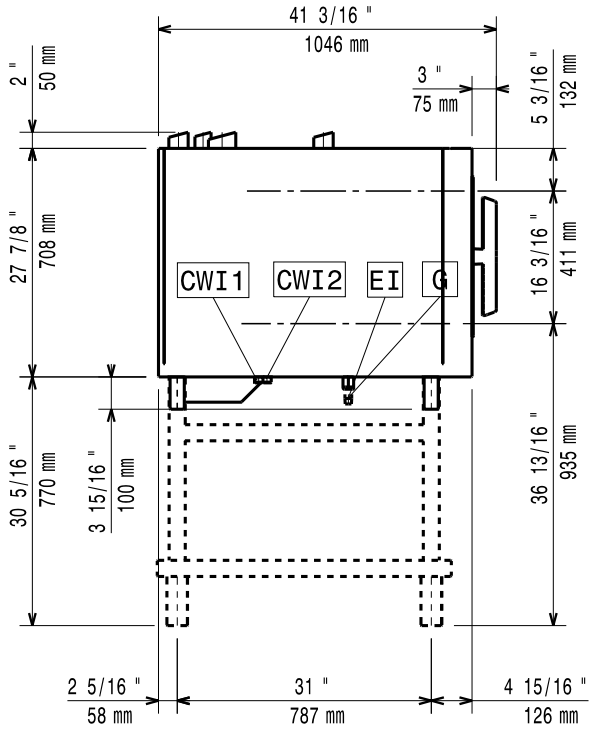

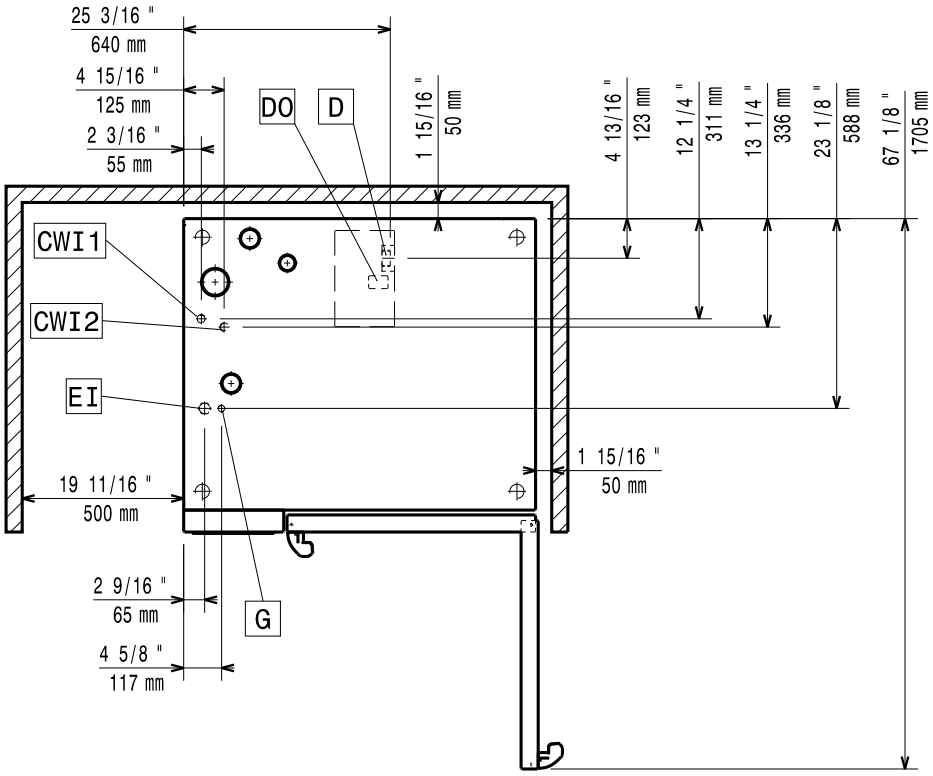

Installation diagram

6 Grids 2/1 Gas model – boilerless – Touch and Digital

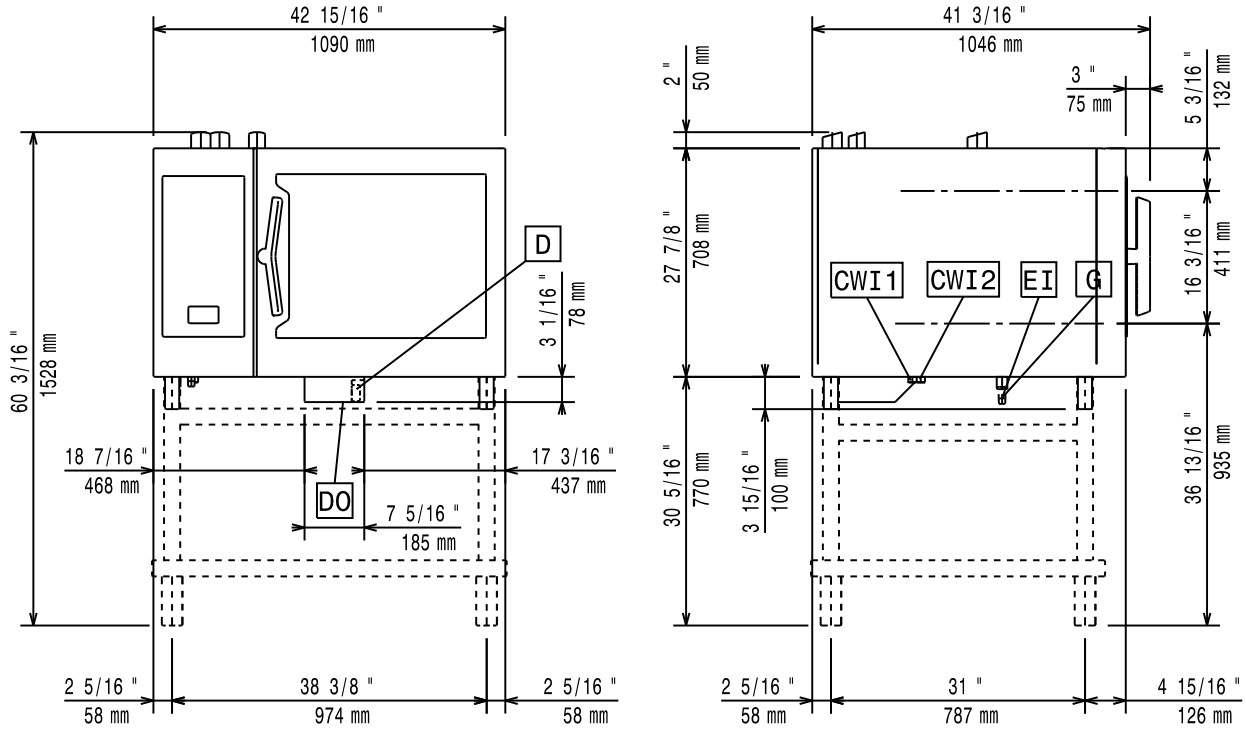

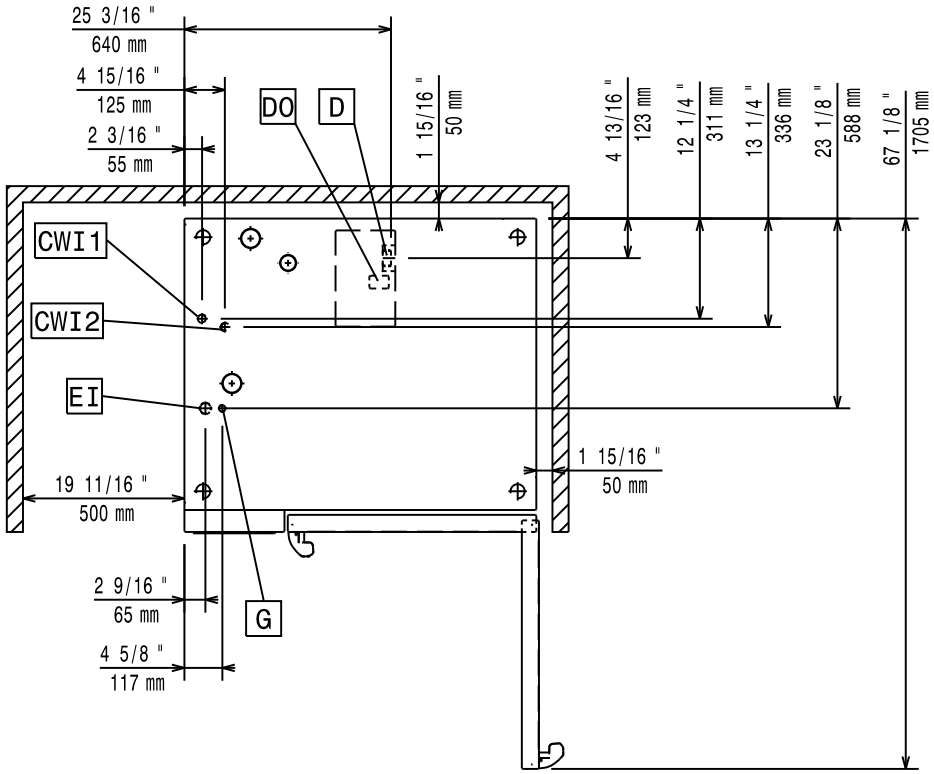

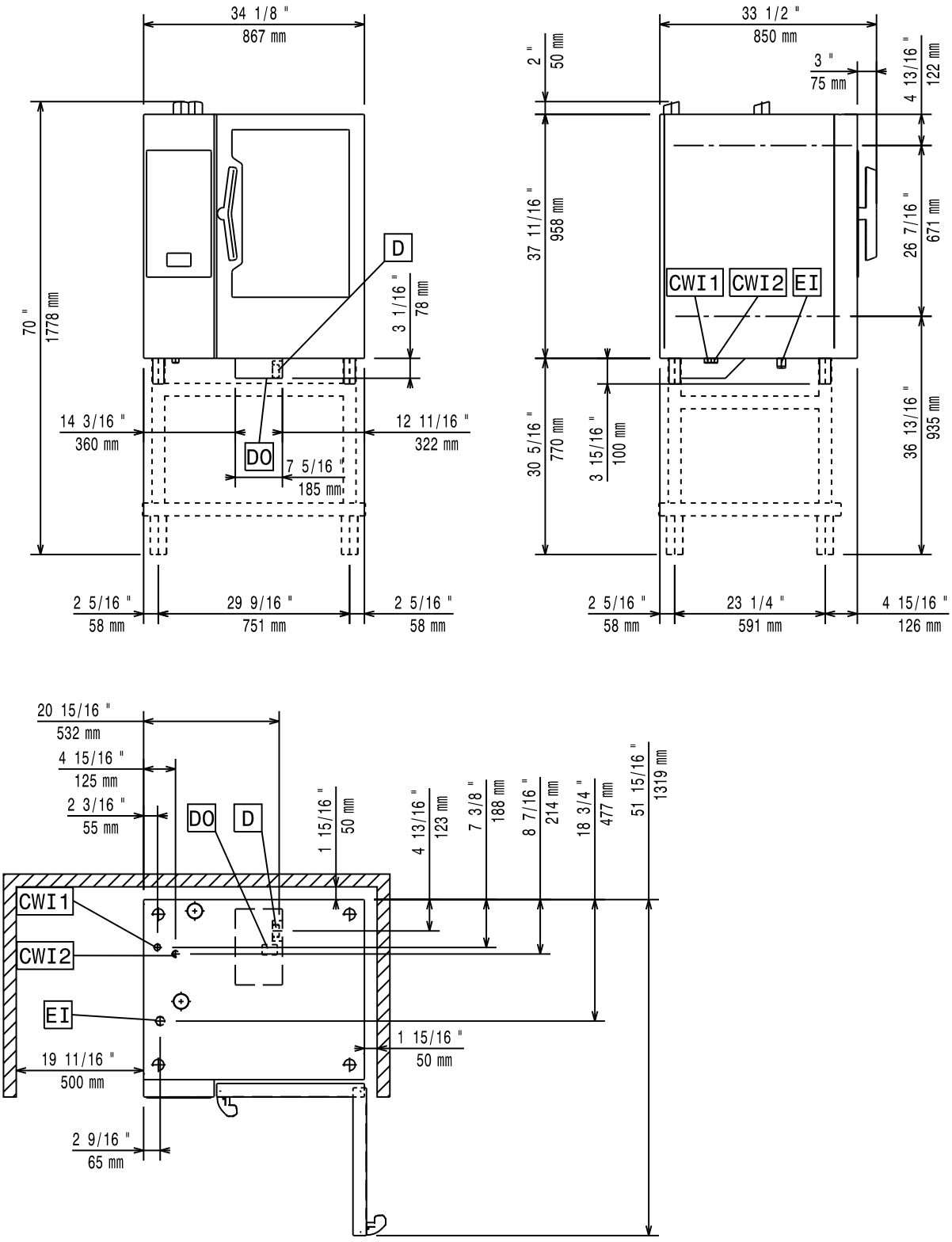
34 1/8 "
867 mm
70 "
1778 mm
D
3 1/16 "
78 mm
14 3/16 "
360 mm
12 11/16 "
322 mm
DO
7 5/16 "
185 mm
2 5/16 "
58 mm
29 9/16 "
751 mm
2 5/16 "
58 mm
33 1/2 "
850 mm
2 "
50 mm
3 "
75 mm
4 13/16 "
122 mm
37 11/16 "
958 mm
26 7/16 "
671 mm
CWI1
CWI2
EI
30 5/16 "
770 mm
3 15/16 "
100 mm
36 13/16 "
935 mm
2 5/16 "
58 mm
23 1/4 "
591 mm
4 15/16 "
126 mm
20 15/16 "
532 mm
4 15/16 "
125 mm
2 3/16 "
55 mm
DO
D
1 15/16 "
50 mm
4 13/16 "
123 mm
7 3/8 "
188 mm
8 7/16 "
214 mm
18 3/4 "
477 mm
51 15/16 "
1319 mm
CWI1
CWI2
EI
1 15/16 "
50 mm
19 11/16 "
500 mm
2 9/16 "
65 mm

Installation diagram

10 Grids 1/1 Gas model – with boiler – Touch and Digital

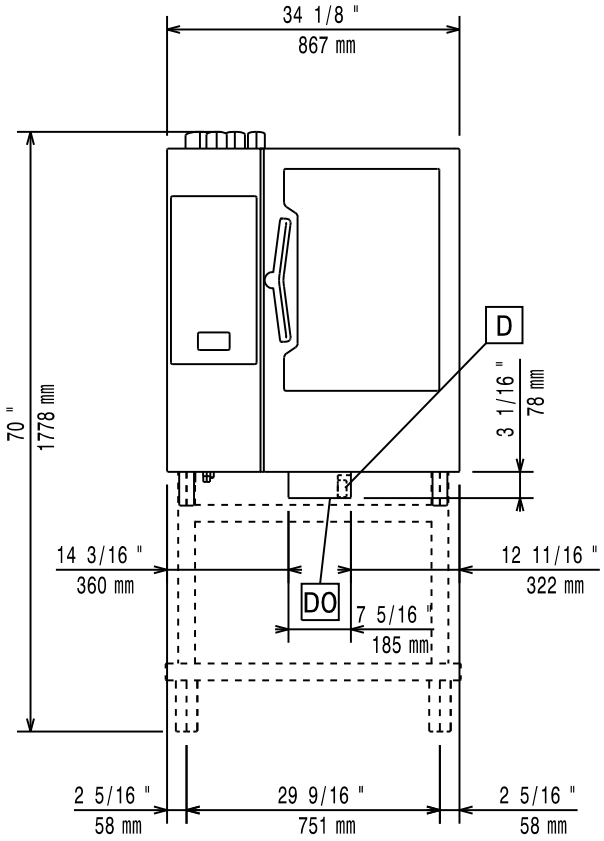

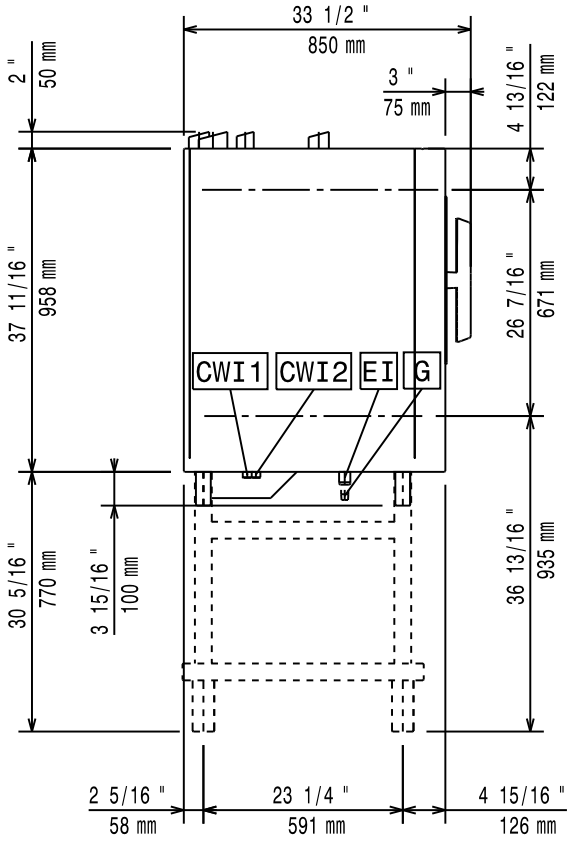

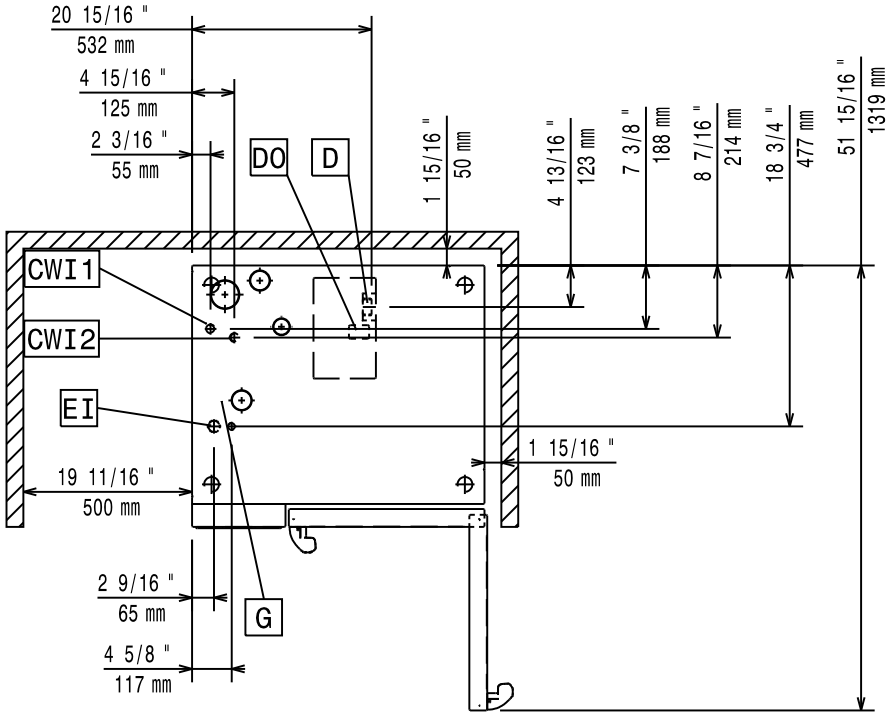

Installation diagram

10 Grids 1/1 Gas model – boilerless – Touch and Digital

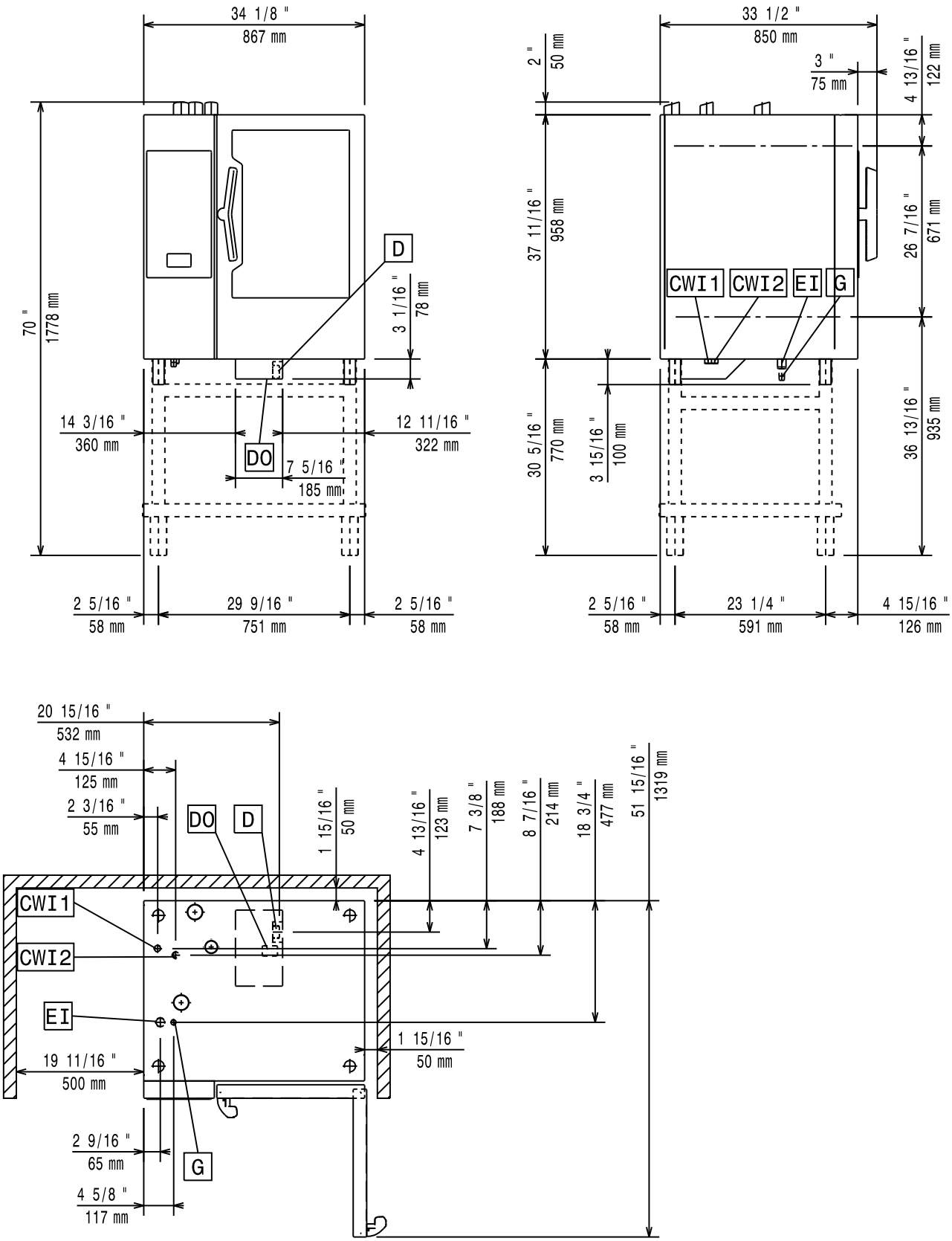

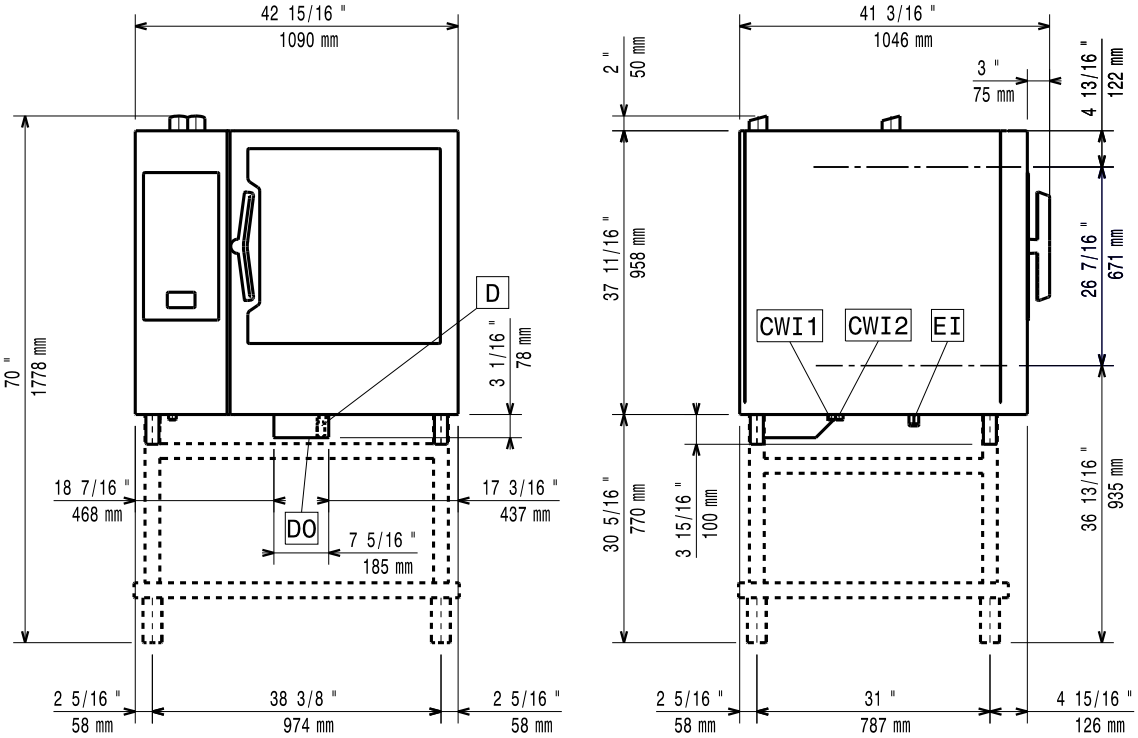
42 15/16 "
1090 mm
41 3/16 "
1046 mm
2 "
50 mm
3 "
75 mm
4 13/16 "
122 mm
70 "
1778 mm
37 11/16 "
958 mm
26 7/16 "
671 mm
D
3 1/16 "
78 mm
CWI1
CWI2
EI
18 7/16 "
468 mm
17 3/16 "
437 mm
DO
7 5/16 "
185 mm
30 5/16 "
770 mm
3 15/16 "
100 mm
36 13/16 "
935 mm
2 5/16 "
58 mm
38 3/8 "
974 mm
2 5/16 "
58 mm
2 5/16 "
58 mm
31 "
787 mm
4 15/16 "
126 mm

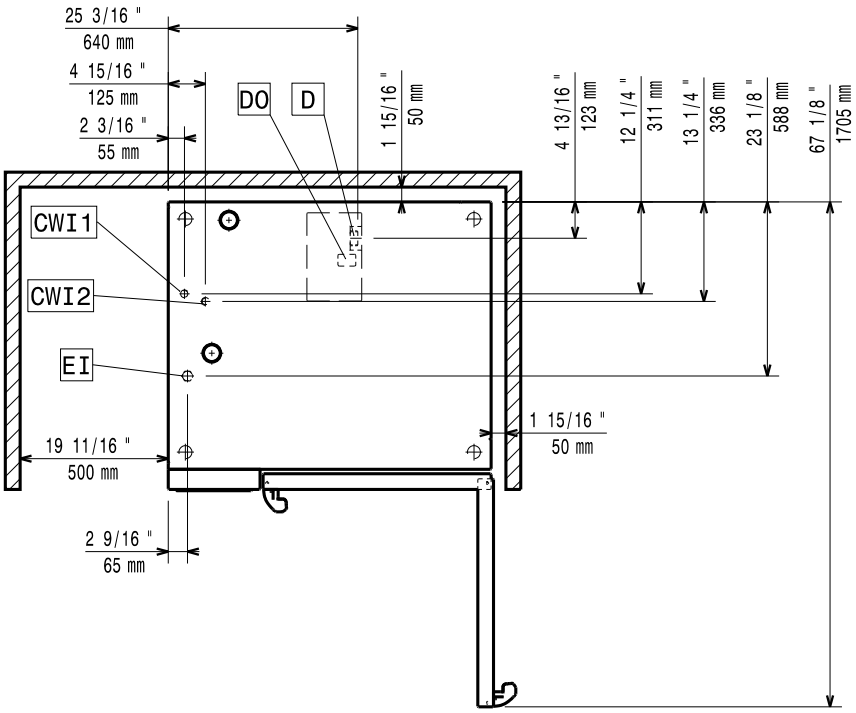
25 3/16 "
640 mm
4 15/16 "
125 mm
2 3/16 "
55 mm
DO
D
1 15/16 "
50 mm
4 13/16 "
123 mm
12 1/4 "
311 mm
13 1/4 "
336 mm
23 1/8 "
588 mm
67 1/8 "
1705 mm
CWI1
CWI2
EI
1 15/16 "
50 mm
19 11/16 "
500 mm
2 9/16 "
65 mm

Installation diagram

10 Grids 2/1 Gas model – boiler – Touch and Digital

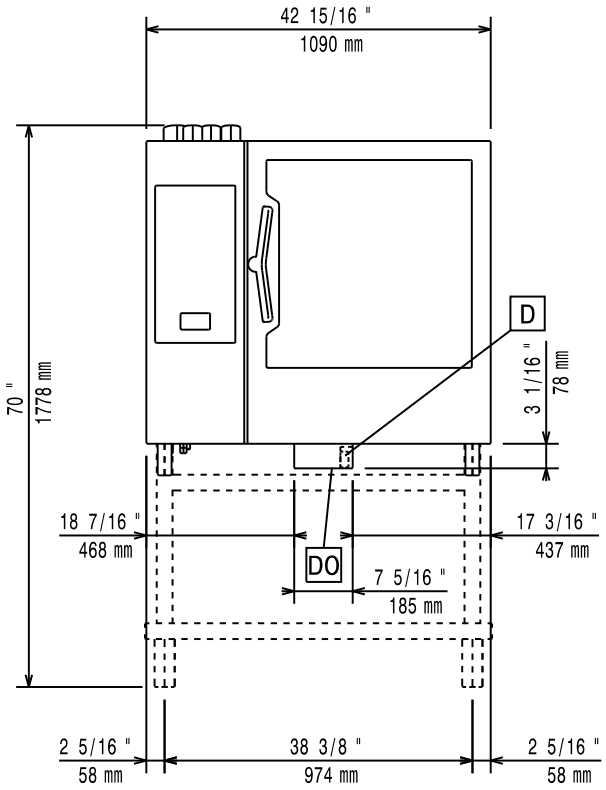

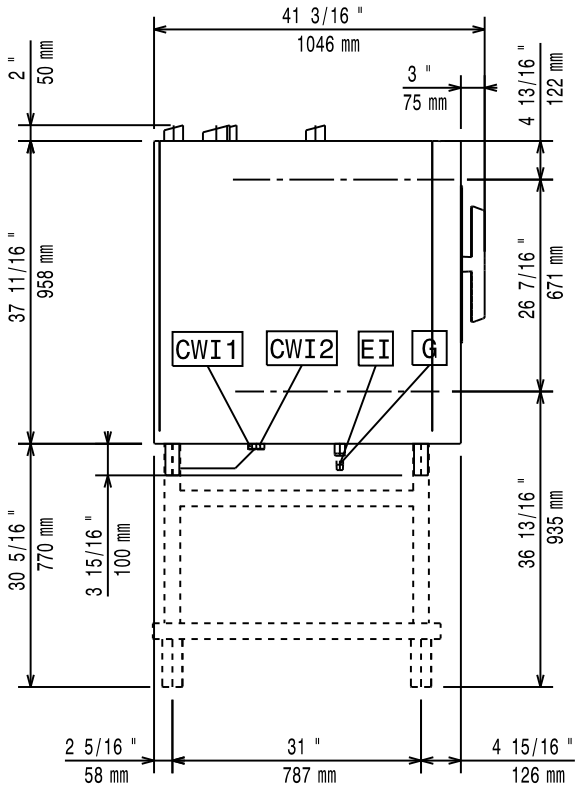

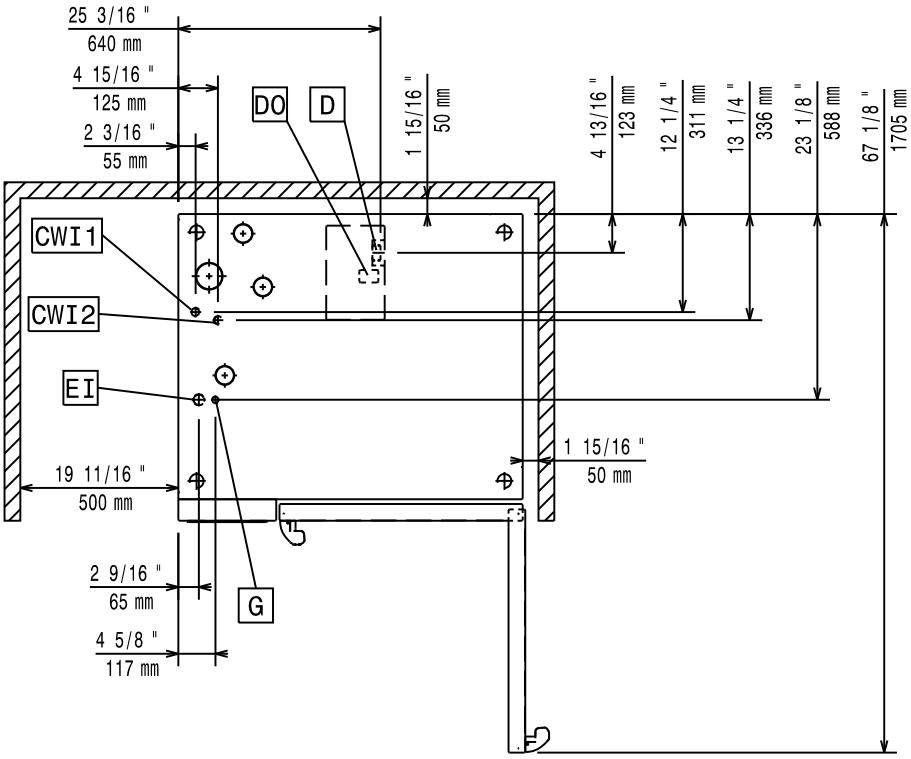

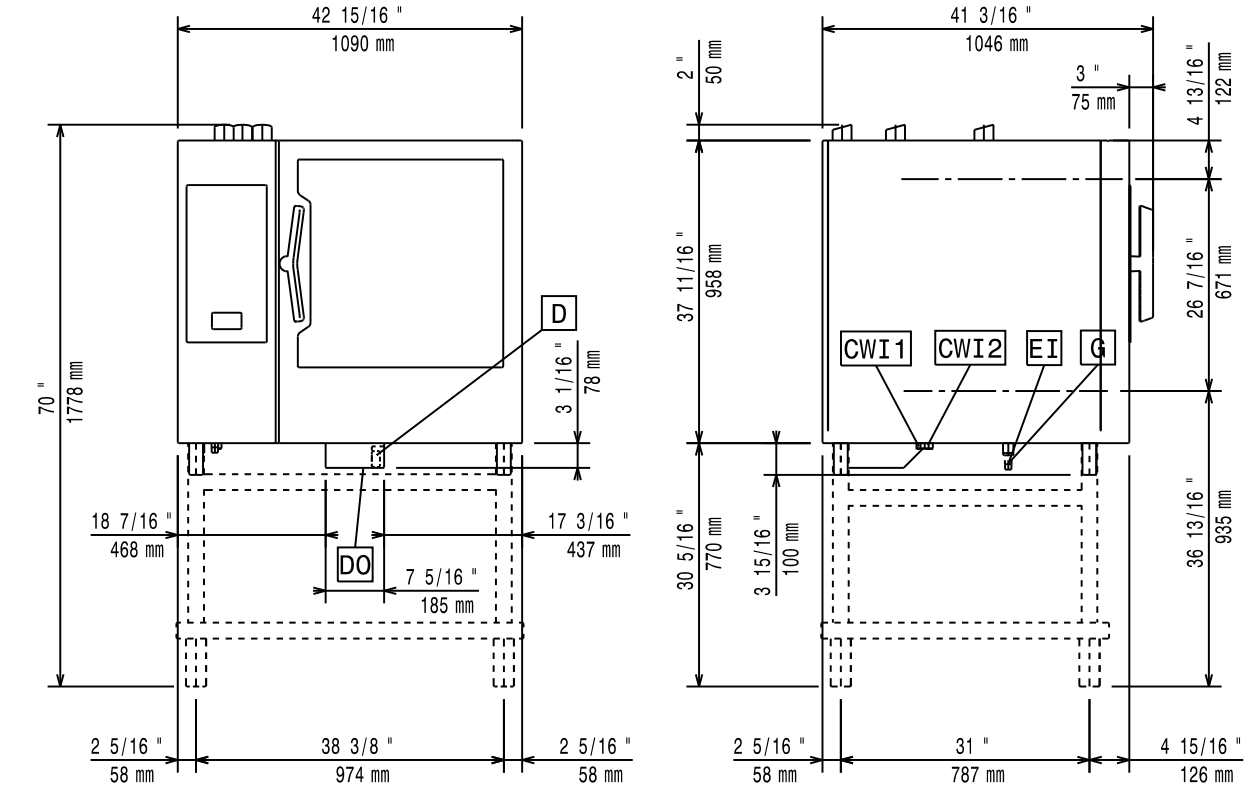
42 15/16 "
1090 mm
70 "
1778 mm
D
3 1/16 "
78 mm
18 7/16 "
468 mm
17 3/16 "
437 mm
DO
7 5/16 "
185 mm
2 5/16 "
58 mm
38 3/8 "
974 mm
2 5/16 "
58 mm
41 3/16 "
1046 mm
2 "
50 mm
3 "
75 mm
4 13/16 "
122 mm
37 11/16 "
958 mm
26 7/16 "
671 mm
CWI1
CWI2
EI
G
30 5/16 "
770 mm
3 15/16 "
100 mm
36 13/16 "
935 mm
2 5/16 "
58 mm
31 "
787 mm
4 15/16 "
126 mm

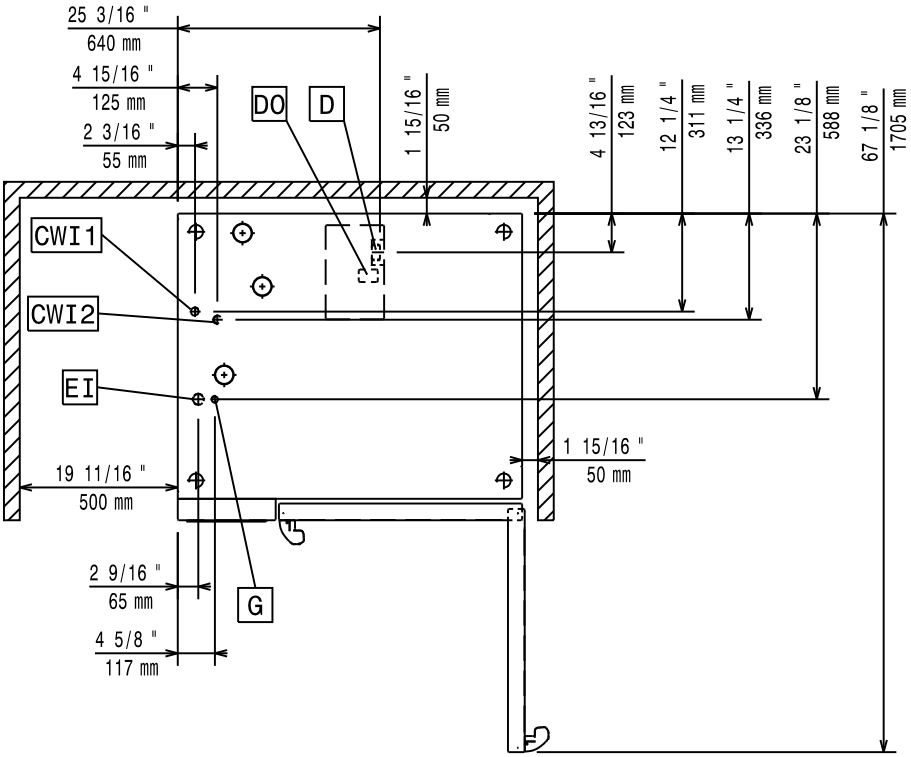
25 3/16 "
640 mm
4 15/16 "
125 mm
2 3/16 "
55 mm
DO
D
1 15/16 "
50 mm
4 13/16 "
123 mm
12 1/4 "
311 mm
13 1/4 "
336 mm
23 1/8 "
588 mm
67 1/8 "
1705 mm
CWI1
CWI2
EI
1 15/16 "
50 mm
19 11/16 "
500 mm
2 9/16 "
65 mm
G
4 5/8 "
117 mm

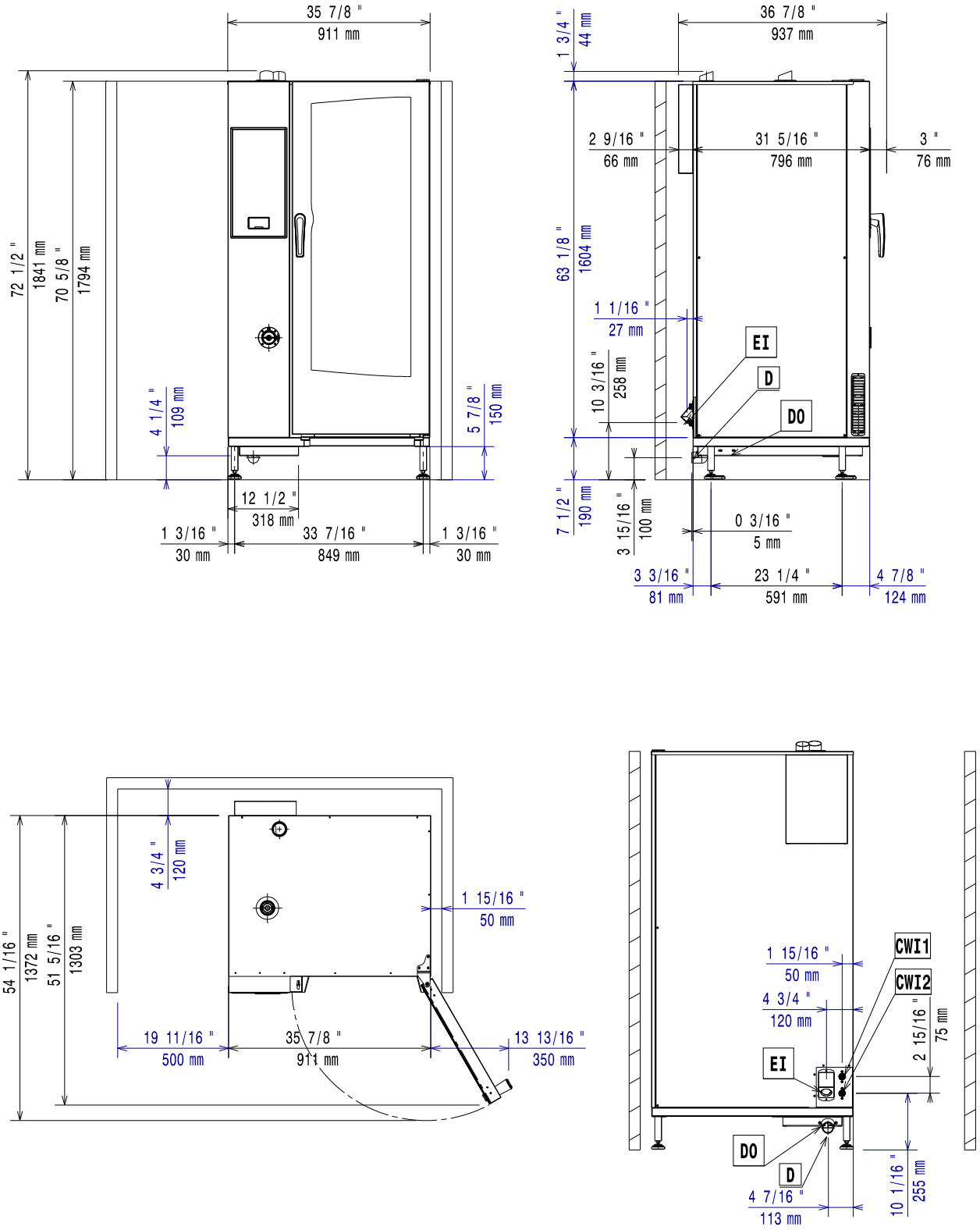
35 7/8 "
911 mm
72 1/2 "
1841 mm
70 5/8 "
1794 mm
4 1/4 "
109 mm
5 7/8 "
150 mm
12 1/2 "
318 mm
1 3/16 "
30 mm
33 7/16 "
849 mm
1 3/16 "
30 mm
36 7/8 "
937 mm
1 3/4 "
44 mm
2 9/16 "
66 mm
31 5/16 "
796 mm
3 "
76 mm
63 1/8 "
1604 mm
1 1/16 "
27 mm
10 3/16 "
258 mm
EI
D
DO
7 1/2 "
190 mm
3 15/16 "
100 mm
0 3/16 "
5 mm
3 3/16 "
81 mm
23 1/4 "
591 mm
4 7/8 "
124 mm
4 3/4 "
120 mm
1 15/16 "
50 mm
54 1/16 "
1372 mm
51 5/16 "
1303 mm
19 11/16 "
500 mm
35 7/8 "
911 mm
13 13/16 "
350 mm
CWI1
CWI2
1 15/16 "
50 mm
4 3/4 "
120 mm
2 15/16 "
75 mm
EI
DO
D
4 7/16 "
113 mm
10 1/16 "
255 mm

597402P01

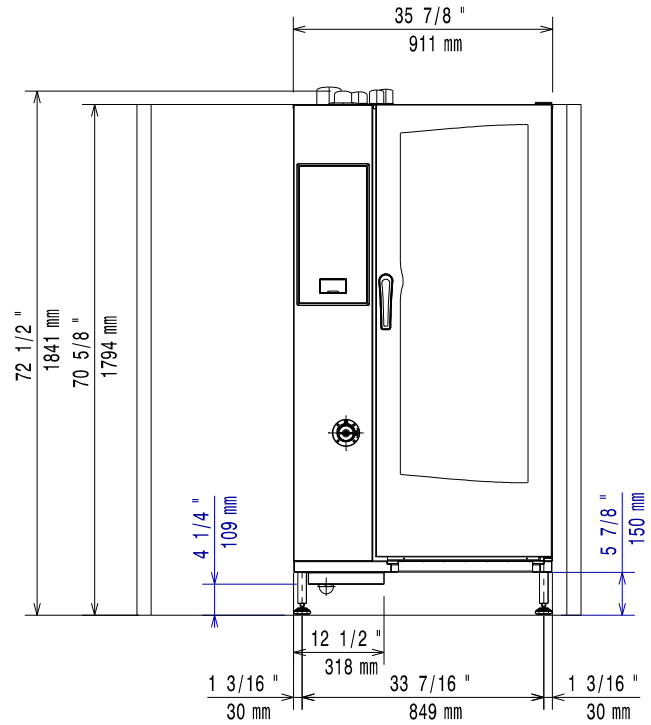
35 7/8 "
911 mm
72 1/2 "
1841 mm
70 5/8 "
1794 mm
4 1/4 "
109 mm
5 7/8 "
150 mm
12 1/2 "
318 mm
1 3/16 "
30 mm
33 7/16 "
849 mm
1 3/16 "
30 mm

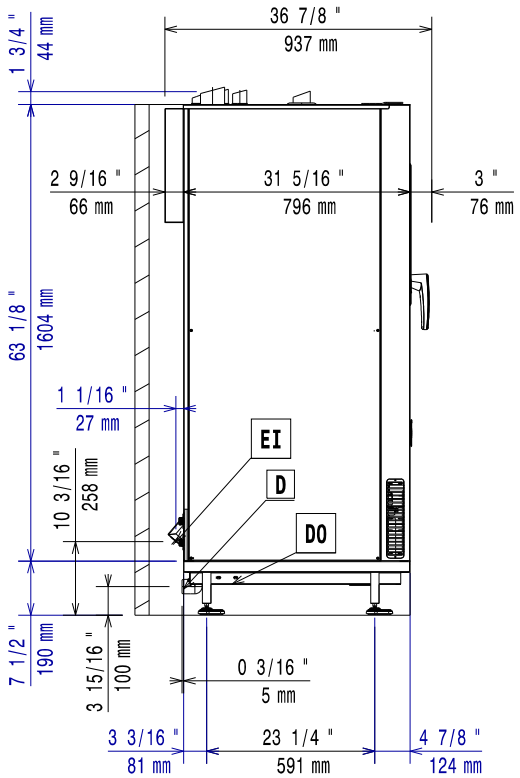
36 7/8 "
937 mm
1 3/4 "
44 mm
2 9/16 "
66 mm
31 5/16 "
796 mm
3 "
76 mm
63 1/8 "
1604 mm
1 1/16 "
27 mm
10 3/16 "
258 mm
EI
D
DO
7 1/2 "
190 mm
3 15/16 "
100 mm
0 3/16 "
5 mm
3 3/16 "
81 mm
23 1/4 "
591 mm
4 7/8 "
124 mm

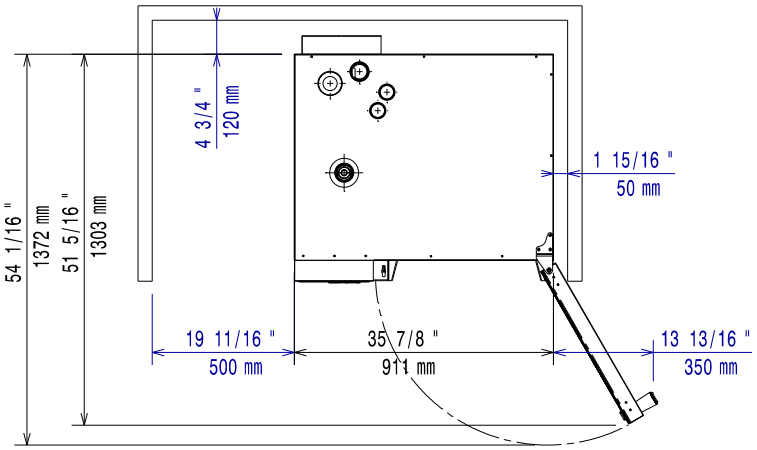
4 3/4 "
120 mm
1 15/16 "
50 mm
54 1/16 "
1372 mm
51 5/16 "
1303 mm
19 11/16 "
500 mm
35 7/8 "
911 mm
13 13/16 "
350 mm

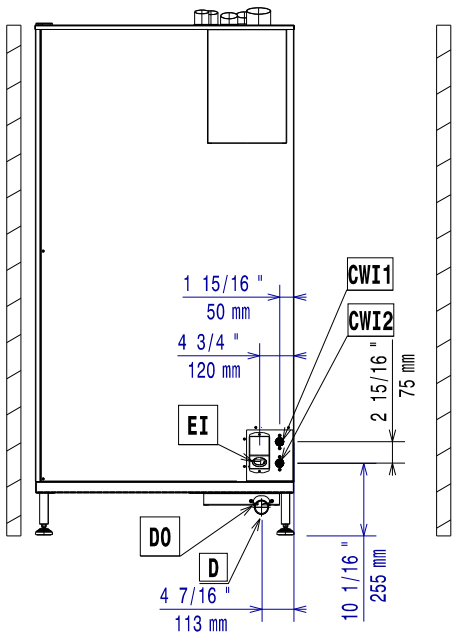
1 15/16 "
50 mm
4 3/4 "
120 mm
CWI1
CWI2
2 15/16 "
75 mm
EI
DO
D
4 7/16 "
113 mm
10 1/16 "
255 mm

597402Q01

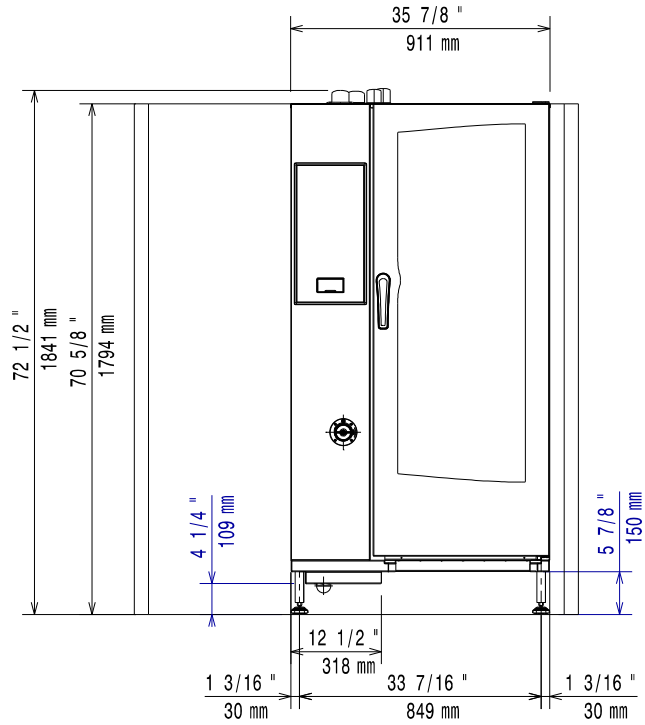
35 7/8 "
911 mm
72 1/2 "
1841 mm
70 5/8 "
1794 mm
4 1/4 "
109 mm
5 7/8 "
150 mm
12 1/2 "
318 mm
1 3/16 "
30 mm
33 7/16 "
849 mm
1 3/16 "
30 mm

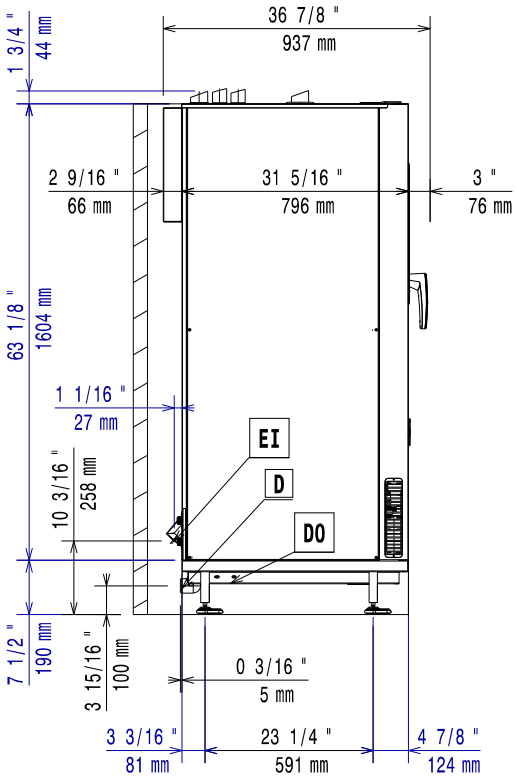
1 3/4 "
44 mm
36 7/8 "
937 mm
2 9/16 "
66 mm
31 5/16 "
796 mm
3 "
76 mm
63 1/8 "
1604 mm
1 1/16 "
27 mm
EI
D
DO
10 3/16 "
258 mm
7 1/2 "
190 mm
3 15/16 "
100 mm
0 3/16 "
5 mm
3 3/16 "
81 mm
23 1/4 "
591 mm
4 7/8 "
124 mm

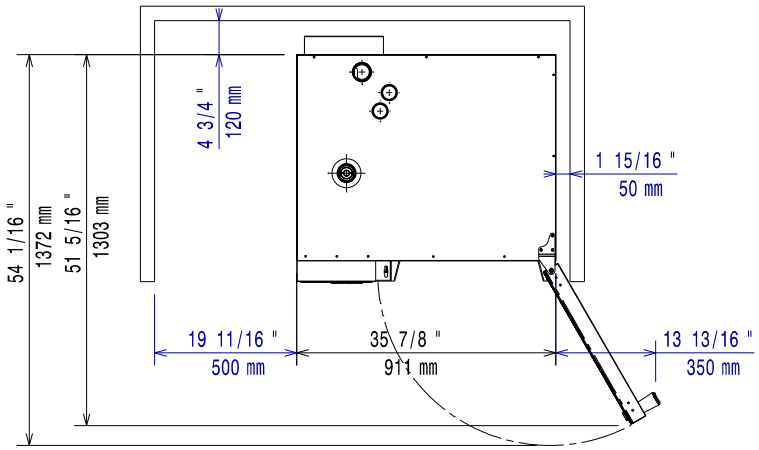
4 3/4 "
120 mm
1 15/16 "
50 mm
54 1/16 "
1372 mm
51 5/16 "
1303 mm
19 11/16 "
500 mm
35 7/8 "
911 mm
13 13/16 "
350 mm

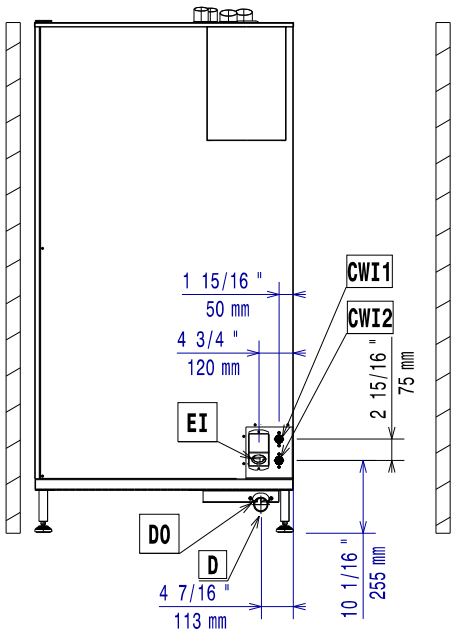
CWI1
CWI2
1 15/16 "
50 mm
4 3/4 "
120 mm
2 15/16 "
75 mm
EI
DO
D
4 7/16 "
113 mm
10 1/16 "
255 mm

597402R01

Installation diagram

20 Grids 2/1 Electrical Model – Touch and Digital (code 597402V01)

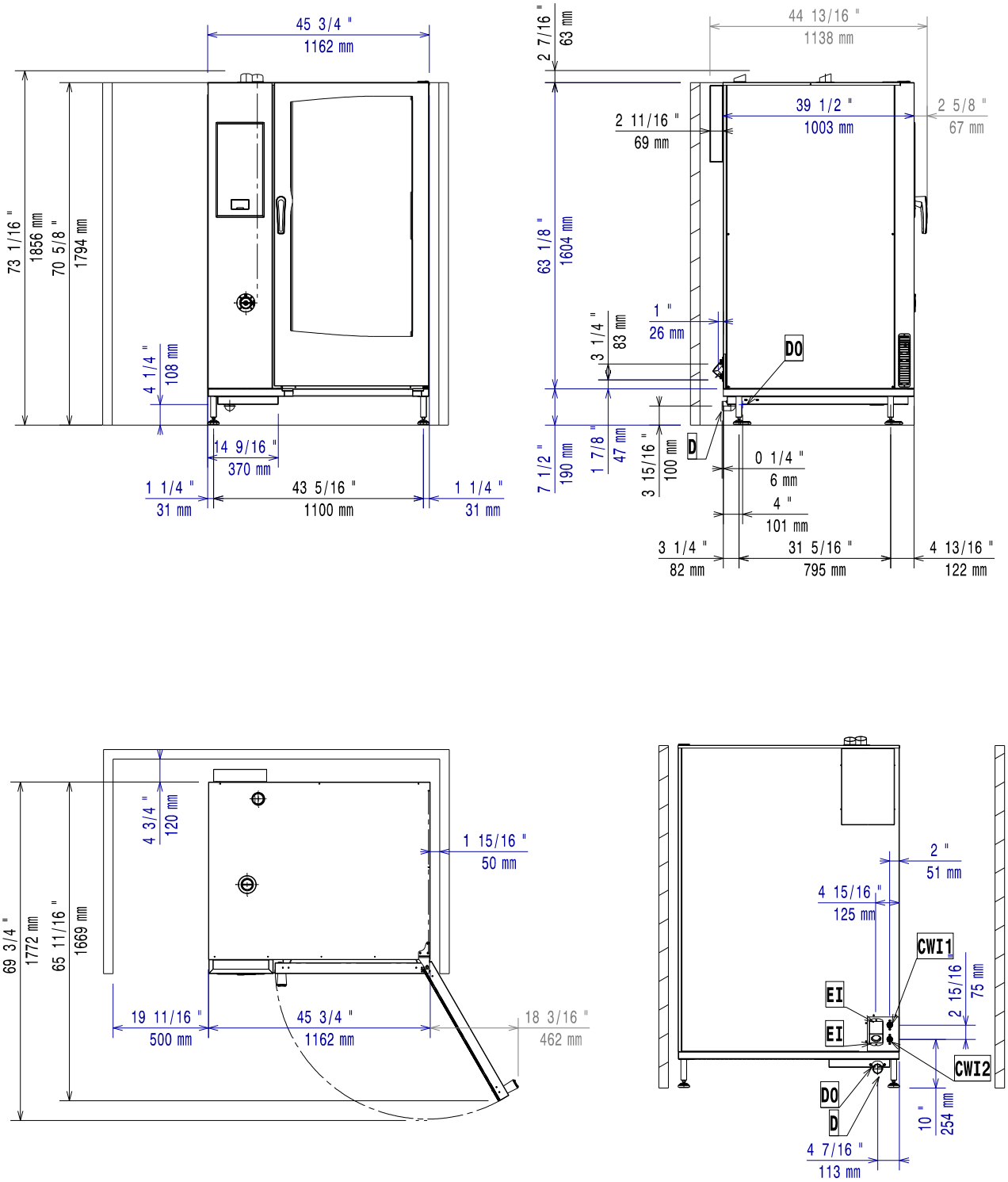

597402V01

Installation diagram

20 Grids 2/1 Gas Model – with boiler – Touch and Digital (code 597402W01)

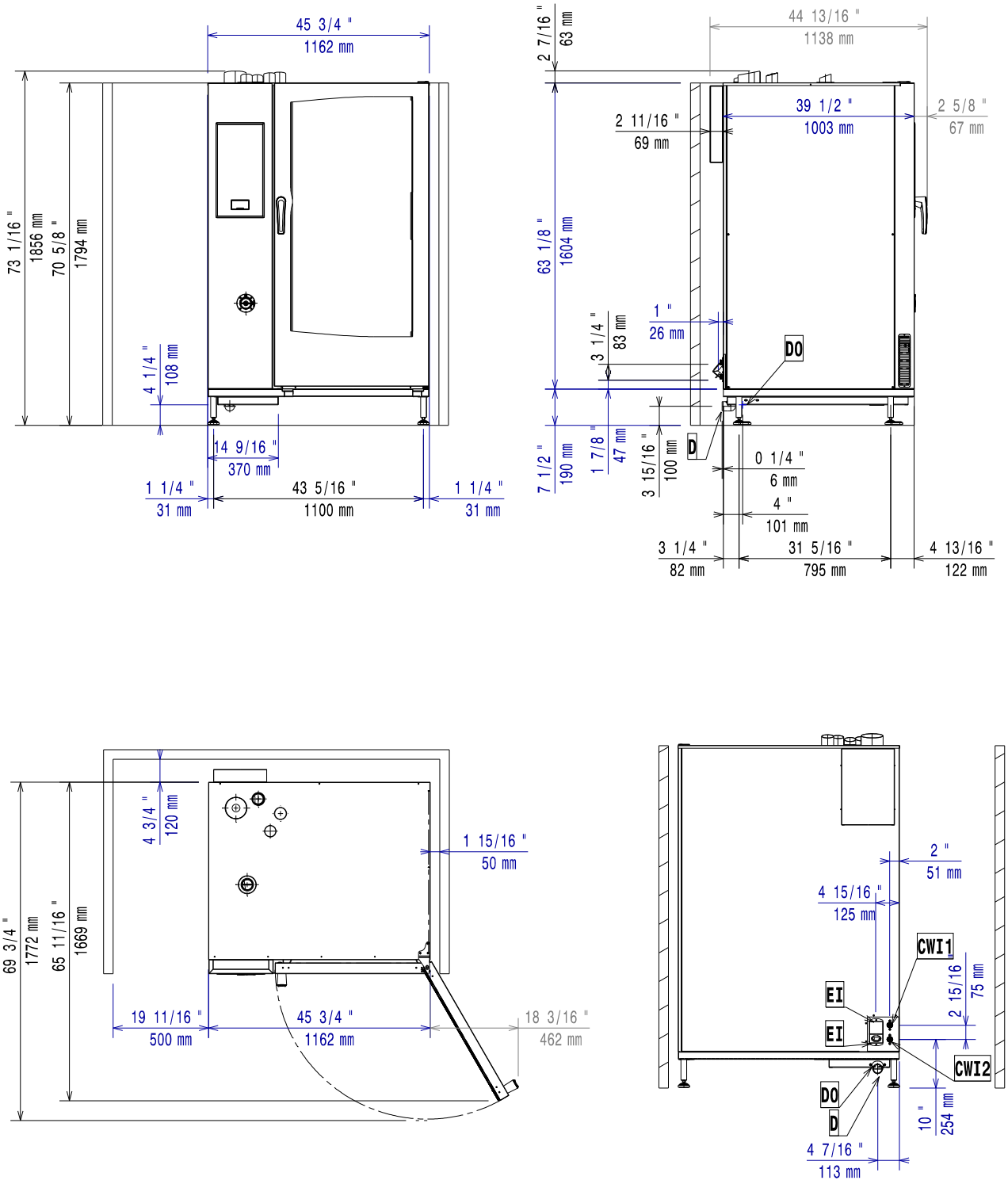

597402W01

Installation diagram

20 Grids 2/1 Gas Model – Boilerless – Touch and Digital (code 597402X01)

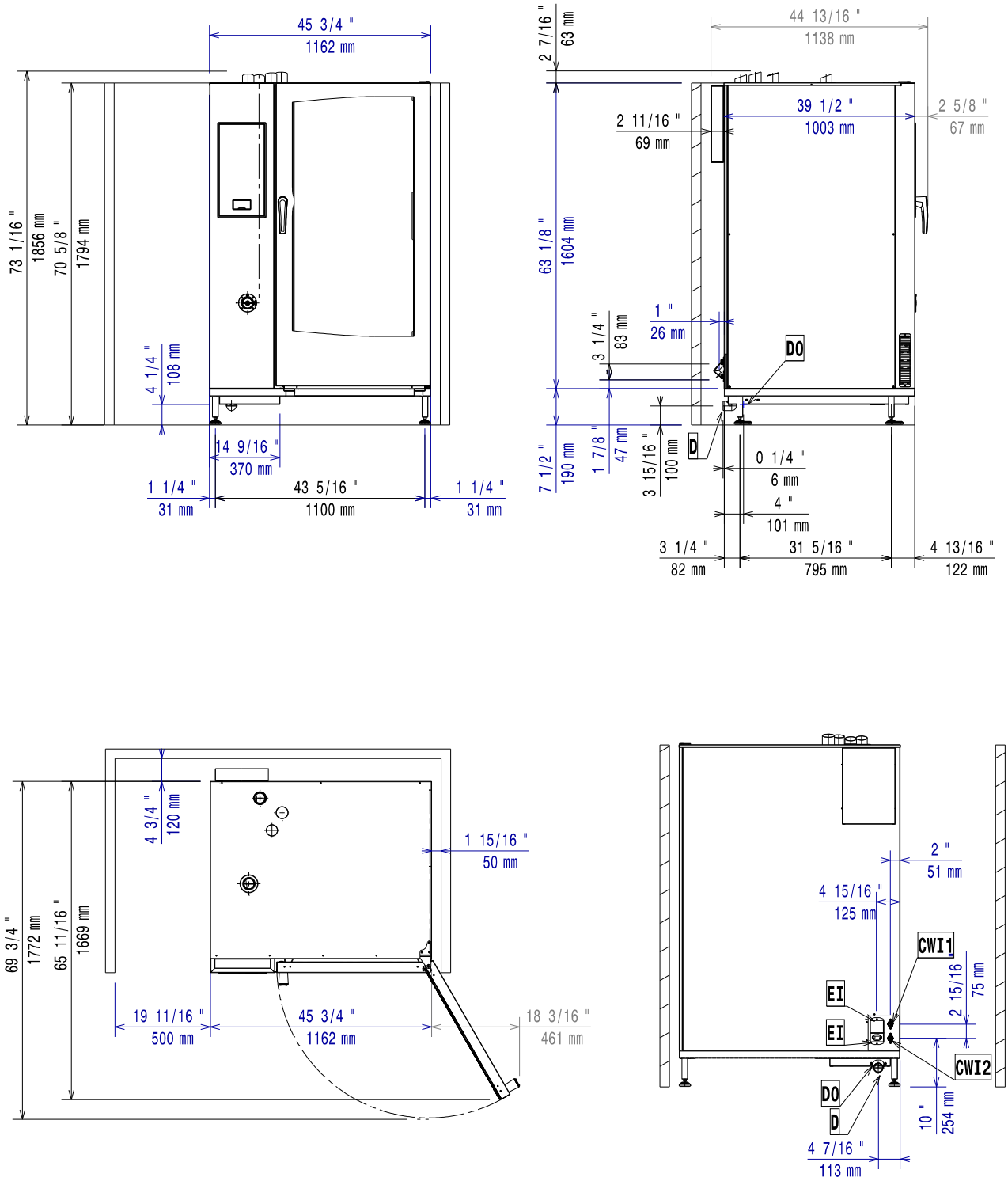

597402X01

D = Drain outlet ⌀50 mm M

EI = Electricity inlet

CW1 = Cold water inlet G 3/4″

CW2 = Cold water inlet G 1/2″ for treated water ISO 228/1

G = Gas connection ⌀1″M (20 Grids 1/1 – 2/1 and 10 Grids 2/1)

G = Gas connection ⌀1/2″M (6 Grids 1/1 – 2/1 and 10 Grids 1/1 models)

Foreword

Read the following instructions, including the warranty terms before installing and using the appliance.

Visit our website www.electroluxprofessional.com and open the Support section to:

Register your product

Get hints & tips of your product, service and repair information

The installation, use and maintenance manual (hereinafter Manual) provides the user with information necessary for correct and safe use of the appliance.

The following must not be considered a long and exacting list of warnings, but rather a set of instructions suitable for improving appliance performance in every respect and, above all, preventing injury to persons and animals and damage to property due to improper operating procedures.

All persons involved in appliance transport, installation, commissioning, use and maintenance, repair and disassembly must consult and carefully read this manual before carrying out the various operations, in order to avoid wrong and improper actions that could compromise the appliance's integrity or endanger people. Make sure to periodically inform the user regarding the safety regulations. It is also important to instruct and update personnel authorised to operate on the appliance, regarding its use and maintenance.

The manual must be available to operators and carefully kept in the place where the appliance is used, so that it is always at hand for consultation in case of doubts or whenever required.

If, after reading this manual, there are still doubts regarding appliance use, do not hesitate to contact the Manufacturer or the authorised Service Centre to receive prompt and precise assistance for better operation and maximum efficiency of the appliance. During all stages of appliance use, always respect the current regulations on safety, work hygiene and environmental protection. It is the user's responsibility to make sure the appliance is started and operated only in optimum conditions of safety for people, animals and property.

IMPORTANT

- The manufacturer declines any liability for operations carried out on the appliance without respecting the instructions given in this manual.
- The manufacturer reserves the right to modify the appliances presented in this publication without notice.
- No part of this manual may be reproduced.
- This manual is available in digital format by:
  - contacting the dealer or reference customer care;
  - downloading the latest and up to date manual on the web site www.electroluxprofessional.com;
- The manual must always be kept in an easily accessed place near the appliance. Appliance operators and maintenance personnel must be able to easily find and consult it at any time.

Contents

A WARNING AND SAFETY INFORMATION 25
A.1 General information 25
A.2 Personal protection equipment 25
A.3 General safety 26
A.4 Safety signs to be placed on the appliance or near its area 27
A.5 Residual risks 27
A.6 Transport, handling and storage 28
A.7 Installation and assembly 28
A.8 Electrical connection 28
A.9 Water connection 28
A.10 Positioning 29
A.11 Appliance space limitations 29
A.12 Appliance disposal 29
B APPLIANCE AND MANUFACTURER’S IDENTIFICATION DATA 29
B.1 Data plate position 29
B.2 Appliance and manufacturer's identification data 29
C GENERAL INFORMATION 30
C.1 Introduction 30
C.2 Testing and inspection 30
C.3 Copyright 30
C.4 Keeping the manual 30
C.5 Recipients of the manual 30
C.6 Definitions 30
C.7 Responsibility 31
D TRANSPORT, HANDLING AND STORAGE 31
D.1 Introduction 31
D.2 Handling 31
D.2.1 Procedures for handling operations 31
D.2.2 Shifting 31
D.2.3 Placing the load 31
D.3 Customer packaging checks 32
D.4 Storage 32
E TECHNICAL DATA 32
E.1 ELECTRICAL models data 32
E.2 ELECTRICAL and GAS models data 32
E.3 GAS models data 32
E.4 Appliance dimensions 34
E.5 Conversion tables 34
F PRODUCT DESCRIPTION 35
F.1 Appliance overview 35
F.2 Trolley in 20GN models 35
G INSTALLATION AND ASSEMBLY 36
G.1 Introduction 36
G.2 Customer's responsibilities 36
G.3 Installation 36
G.3.1 Place of installation 36
G.3.2 Unpacking 37
G.3.3 Disposal of packing 38
G.3.4 Positioning 38
G.3.5 Installation on castors 40
G.3.6 Tabletop models 40
G.3.7 20GN models adjustments 40
G.3.8 Stacking installations 41
G.3.9 Fixing oven systems 42
G.3.10 Hygienic requirements 43
G.4 Water connection 44
G.4.1 General information on water connection 44
G.4.2 Water characteristics for inlet “CWI2“ 45
G.4.3 Check supply pressure 46
G.4.4 Water draining system 47
G.5 Electrical connection 48
G.5.1 General precautions for electrical connection 48
G.5.2 Power cable installation 48
G.5.3 Electrified accessories installation 49
G.5.4 Safety device 49
G.6 Connectivity 50
G.6.1 Installation 50

G.7 Gas connection 50
G.7.1 General precautions for gas connection 50
G.7.2 Nominal heat output 50
G.7.3 Check the supply pressure 50
G.7.4 Burnt gas discharge 51
G.7.5 Instructions for the exhausting system 52
H FIRST START UP 52
H.1 Recap checks 52
I CONVERSION TO A DIFFERENT GAS TYPE 53
I.1 Warning 53
I.2 Replacement of the GAS VALVE nozzle 53
I.3 Gas valve adjustment (refer to **Figure 1**) 53
I.3.1 Appliance gas type sticker 53
I.4 Nozzles and adjustments / gas types 53
I.5 How to replace the plate (burner reducer) in US models 54
J APPLIANCE SET UP 54
J.1 Introduction 54
J.1.1 Touch models 54
J.1.2 Digital models 55
K MACHINE DISPOSAL 55
K.1 Procedure regarding appliance disposal 55

A WARNING AND SAFETY INFORMATION

A.1 General information

To ensure safe use of the machine and a proper understanding of the manual it is necessary to be familiar with the terms and typographical conventions used in the documentation. The following symbols are used in the manual to indicate and identify the various types of hazards:

WARNING
Danger for the health and safety of operators.

WARNING
Danger of electrocution - dangerous voltage.

CAUTION
Risk of damage to the appliance or the product.

IMPORTANT
Important instructions or information on the product

Read the instructions before using the appliance

Clarifications and explanations

WARNING
Improper installation, adjustment, alteration, service or maintenance can cause property damage, injury or death. Read the installation, operating and maintenance instructions thoroughly before installing or servicing this equipment.

FOR YOUR SAFETY
Do not store or use gasoline or other flammable vapours and liquids in the vicinity of this or any other appliance.

IMPORTANT
After installation put in a prominent location suitable instructions to be followed in the event gas is smelt. This information shall be obtained by consulting the local gas supplier.

- This appliance is to be intended for commercial and collective use, not for continuous mass production of food nor for household use. Any other use is deemed improper.
- Only specialised personnel are authorised to operate on the machine.
- This appliance must not be used by minors and adults with limited physical, sensory or mental abilities or without adequate experience and knowledge regarding its use.
- Do not store explosive substances, such as pressurized containers with flammable propellant, in this appliance or close to the appliance
- Do not remove, tamper with or make the machine data plate and markings illegible.
- Refer to the data given on the machine’s data plate for relations with the Manufacturer (e.g. when ordering spare parts, etc.).

A.2 Personal protection equipment

Summary table of the Personal Protection Equipment (PPE) to be used during the various stages of the appliance's service life.

Stage	Protective garments	Safety footwear	Gloves	Glasses	Safety helmet
Transport		●	○	—	○
Handling	—	●	○	—	—

Stage	Protective garments	Safety footwear	Gloves	Glasses	Safety helmet
Unpacking	—	●	○	—	—
Installation	—	●	●[1]	—	—
Normal use	●	●	●[2]	—	—
Adjustments	○	●	—	—	—
Routine cleaning	○	●	●[1–3]	○	—
Extraordinary cleaning	○	●	●[1–3]	○	—
Maintenance	○	●	○	—	—
Dismantling	○	●	○	○	—
Scrapping	○	●	○	○	—
Key:					
●	**PPE REQUIRED**				
○	**PPE AVAILABLE OR TO BE USED IF NECESSARY**				
—	**PPE NOT REQUIRED**				

1. During these operations, gloves must be cut-resistant. Failure to use the personal protection equipment by operators, specialized personnel or users can involve exposure to harm to health (depending on the model).
2. During these operations, gloves must be heatproof to protect hands from contact with hot food or hot parts of the appliance and/or when removing hot items from it. Failure to use the personal protection equipment by operators, specialised personnel or users can involve exposure to chemical risk and cause possible harm to health (depending on the model).
3. During these operations, gloves must be suitable for contact with chemical substances used (refer to the safety data sheet of the substances used for information regarding the required PPE). Failure to use the personal protection equipment by operators, specialized personnel or users can involve exposure to chemical risk and cause possible harm to health (depending on the model).

A.3 General safety

- The appliances are provided with electric and/or mechanical safety devices for protecting workers and the appliance itself.
- Never operate the appliance, removing, modifying or tampering with the guards, protection or safety devices.
- Do not make any modifications to the parts supplied with the appliance.
- Several illustrations in the manual show the appliance, or parts of it, without guards or with guards removed. This is purely for explanatory purposes. Do not use the appliance without the guards or with the protection devices deactivated.

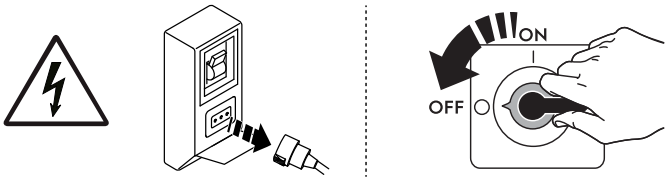

Disconnect the appliance from the power supply before carrying out any installation, assembly, cleaning or maintenance procedure.

- Do not remove, tamper with or make illegible the marking and safety, danger and instruction signs and labels on the appliance.
- Before servicing, disconnect the electrical service and place a red tag at the disconnect switch to indicate work is being done on that circuit.
- The A-weighted emission sound pressure level does not exceed 70 dB(A).
- Turn the appliance off in case of fault or poor operation.
- Do not use products (even if diluted) containing chlorine (sodium hypochlorite, hydrochloric or muriatic acid, etc.) to clean the appliance or the floor under it.
- Carefully avoid exposure of the equipment to ozone - do not use ozonizers in the rooms where the equipment is installed.
- Do not spray aerosols in the vicinity of this appliance while it is in operation.
- Do not place flammable liquids (e.g. spirits) inside the appliance during operation.
- Never check for leaks with an open flame.
- Install the appliance under conditions of adequate ventilation in order to provide a suitable air change per hour. Make sure that the ventilation system, whatever it is, always remains operational and efficient for the entire period of time during which the equipment is operating.

  The appliance must be installed under ventilation hood only.
- Improper ventilation of the oven can be hazardous to the health of the operator; and will result in operational problems, unsatisfactory cooking results, and possible damage to the equipment. Damage sustained as a direct result of improper ventilation OF THE OVEN will not be covered by the Manufacturer's warranty.
- Do not obstruct the flow of combustion and ventilation air.

- The following operations have to be carried out by specialised authorised personnel or Customer Care Service provided with all the appropriate personal protection equipment (A.2 *Personal protection equipment*), tools, utensils and ancillary means, who can ask the manufacturer to supply a servicing manual:
  - Installation and assembly;
  - Positioning;
  - Electrical connection;
  - Appliance cleaning, repair and extraordinary maintenance;
  - Appliance disposal;
  - Work on electrical equipment;
  - Gas installation/connection and gas conversion;

A.4 Safety signs to be placed on the appliance or near its area

Prohibition	Meaning
	do not remove the safety devices
	do not use water to extinguish fires (placed on electrical parts)
	Keep the area around the appliance clear and free from combustible materials. Do not keep flammable materials in the vicinity of the appliance

Danger	Meaning
CAUTION - HOT ATTENTION - CHAUD	caution hot surface
	danger of electrocution (shown on electrical parts with indication of voltage)
	risk of scalding

A.5 Residual risks

The appliance has several risks that were not completely eliminated from a design standpoint or with the installation of adequate protection devices. Nevertheless, through this manual the Manufacturer has taken steps to inform operators of such risks, carefully indicating the personal protection equipment to be used by them. In order to reduce the risks, provide for sufficient spaces while installing the unit.

To preserve these conditions, the areas around the appliance must always be:

- kept free of obstacles (e.g. ladders, tools, containers, boxes, etc.);
- clean and dry;
- well lit.

For the Customer's complete information, the residual risks remaining on the appliance are indicated below: such actions are deemed improper and therefore strictly forbidden.

Residual risk	Description of hazardous situation
Slipping or falling	The operator can slip due to water, any liquid or dirt on the floor
Burns/abrasions (e.g. heating elements, cold pan, cooling circuit plates and pipes)	The operator deliberately or unintentionally touches some components inside the appliance without using protective gloves.
Electrocution	Contact with live parts during maintenance operations carried out with the electrical panel powered
Falling from above	The operator intervenes on the appliance using unsuitable systems to access the upper part (e.g. rung ladders, or climbs on it)

Residual risk	Description of hazardous situation
Crushing or injury	The specialised personnel may not correctly fix the control panel when accessing the technical compartment. The panel could close suddenly.
Tipping of loads	When handling the appliance or the packing containing it, using unsuitable lifting systems or accessories or with the unbalanced load
Chemical	Contact with chemical substances (e.g. detergent, rinse aid, scale remover, etc.) without taking adequate safety precautions. Therefore always refer to the safety cards and labels on the products used.
Sudden closure	The operator for normal appliance use could suddenly and deliberately close the lid/door/oven door (if present, depending on the appliance type).

A.6 Transport, handling and storage

- Transport (i.e. transfer of the appliance from one place to another) and handling (i.e. transfer inside workplaces) must occur with the use of special and adequate means.
- Please refer to indications on packaging for stackability during transport, handling and storage.
- Do not stand under suspended loads during loading or unloading operations. Unauthorized personnel must not enter the work area.
- The weight of the appliance alone is not sufficient to keep it steady.
- For appliance handling, do not lift and anchor it to movable or weak parts such as: casings, electrical raceways, pneumatic parts, etc.
- Do not push or pull the appliance to move it, as it may tip over. Use proper tool to lift the appliance.
- Arrange a suitable area with flat floor for appliance unloading and storage operations.
- Appliance transport, handling, shifting and storage personnel must be adequately instructed and trained regarding the safely use of lifting systems and personal protection equipment suitable for the type of operation carried out.
- When removing the anchoring systems, make sure the stability of the appliance parts does not depend on the anchoring and, therefore, that this operation does not cause the load to fall off the vehicle. Before unloading the appliance components, make sure all the anchoring systems are removed.

A.7 Installation and assembly

Install the appliance in compliance with the current local and national regulations.

- The operations described must be carried out in compliance with the current safety regulations and provisions in force in the country of use.
- When installing the appliance, make sure gas set and pressure is carried out in compliance with that specified on the data plate.
- The appliance is not suitable for installation outdoors and/or in places exposed to atmospheric agents (rain, direct sunlight, etc.).

A.8 Electrical connection

- The electric supply installation must satisfy the requirements of the appropriate statutory authority, such as the National Electrical Code (NEC) ANSI/NFPA70, (U.S.A.): the Canadian Electrical Code, CSA C22.2; or other applicable regulations.
- The electric supply connection must meet all national and local electrical code requirements.
- The power supply system must be suitable for the rated current of the connected appliance.
- The information regarding the appliance power supply voltage and frequency is given on the data plate.
- The electrical wiring diagram is attached on the internal side of the wiring compartment panel.
- The appliance must be electrically grounded in accordance with local codes, or in the absence of local codes, with the National Electrical Code, ANSI/NFPA 70, or the Canadian Electrical Code, CSA C22.2, as applicable. Make sure to connect the appliance to an efficient earthing system.
- For 120v. gas versions, Electrolux Professional does not recommend the use of a GFCI outlet. If a GFCI outlet is required by code, a commercial GFCI with a rating of 20 mV must be used.
- Install between the power cable and the electric line a differential thermal-magnetic switch suitable for the absorption specified on the data plate, with contact gap enabling complete disconnection in category III overvoltage conditions and complying with the regulations in force.

  For the correct sizing of the switch or plug, refer to the absorbed current specified on the appliance data plate.
- If the power cable is damaged or too short, it must be replaced by the Customer Care Service or in any case by specialised personnel, in order to prevent any risk.
- The manufacturer declines any liability for damage or injury resulting from breach of the above rules or non-compliance with the electrical safety regulations in force in the country where the appliance is used.
- Verify that a safety circuit breaker is installed between the power cable of the appliance and the mains electric line. The contact opening max. distance and leakage current must comply with the local safety regulations.

A.9 Water connection

Water connection must be carried out in compliance with the regulations and provisions in force with the country.

- Water and waste piping and connections shall comply with the International Plumbing Code 2003, International Code Council (ICC), or to the Uniform Plumbing Code 2003, International Association of Plumbing and Mechanical Officials (IAPMO).
- The pressure measured upstream of the oven (and downstream of any WATER FILTRATION SYSTEMS installed) must be between 100 – 600 kPa (1,0 – 6,0 bar / 14,5 – 87psi) measured in dynamic conditions, i.e. during the boiler filling and washing phase.

WARNING
The manufacturer declines any liability if the safety regulations are not respected.

A.10 Positioning

- Install the appliances, taking all the safety precautions required for this type of operation, also respecting the relevant fire-prevention measures.
- Handle the appliance with care in order to avoid damage or danger to people. Use a pallet for handling and positioning.
- The installation diagram gives the appliance overall dimensions and the position of connections (gas, electricity, water). Check that they are available and ready for making all the necessary connections.
- Check and, if necessary, level the appliance after positioning. Incorrect levelling can cause appliance malfunctioning.
- The appliance should be positioned in order to guarantee safe and ergonomic operations, i.e the operator must be able to open and close the door standing frontally and load and unload the trays with no need to tilt or rotate them. To avoid burns, do not use recipients containing liquids (or products that become liquid with cooking) in shelves positioned at levels higher than 1,6 m above the floor (stacking installation included). This is to prevent spilling during handling.
- In case of “Marine“ models, the appliances must be fixed to the floor.
- Prevent the areas where the appliance is installed to be polluted with corrosive substances (chlorine, etc.). The manufacturer declines any liability for corrosive effects due to external causes.

A.11 Appliance space limitations

- The appliances are not suitable for recess-mounting. Leave a space of at least 50 mm between the appliance and right side and rear walls and 500 from the left wall, or in any case an adequate space to enable subsequent servicing or maintenance operations.
- Maintain a distance of at least 100 mm between the appliance and any combustible walls.

A.12 Appliance disposal

- Make the appliance unusable by removing the power cable and any compartment closing devices, to prevent the possibility of someone becoming trapped inside.

B APPLIANCE AND MANUFACTURER’S IDENTIFICATION DATA

B.1 Data plate position

This instruction manual contains information relevant to various appliances.
See the data plate located on the left side to identify the appliance (see the picture below).

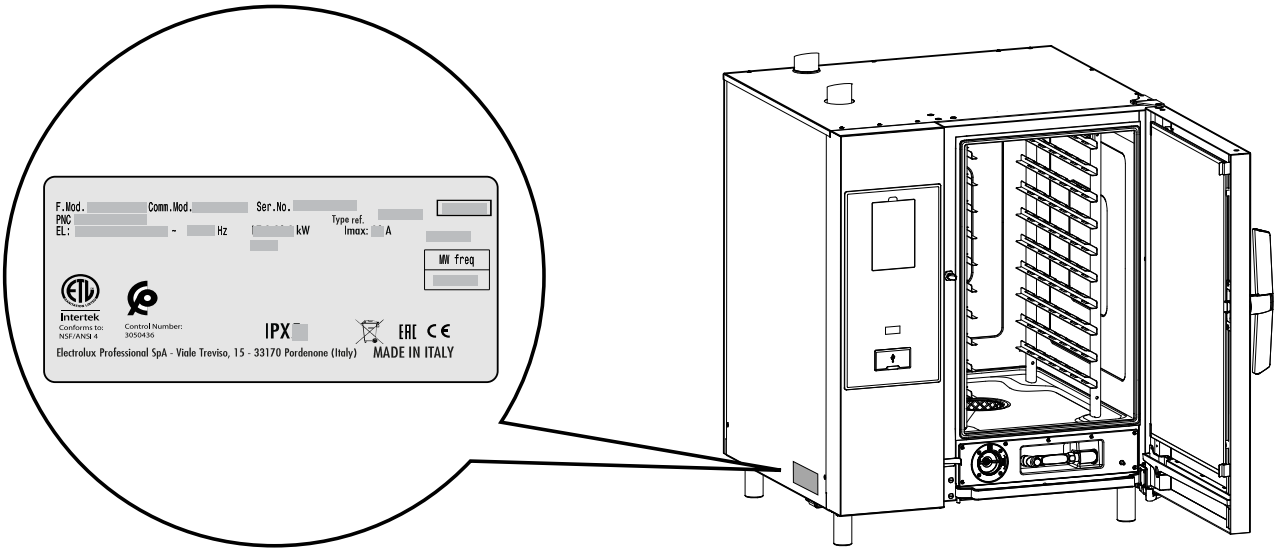

IMPORTANT
When installing the appliance, make sure the electrical connection is carried out in compliance with that specified on the data plate.

B.2 Appliance and manufacturer's identification data

The data plate gives the product identification and technical data.

An example of the marking or data plate on the appliance is given below:

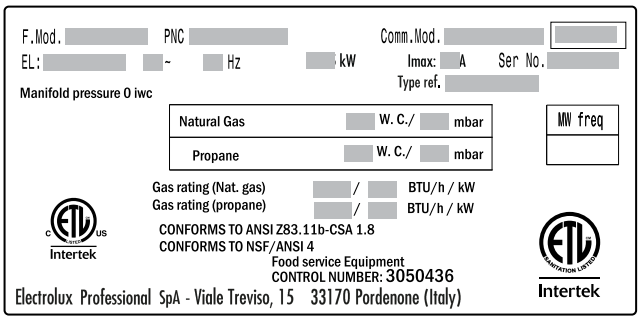

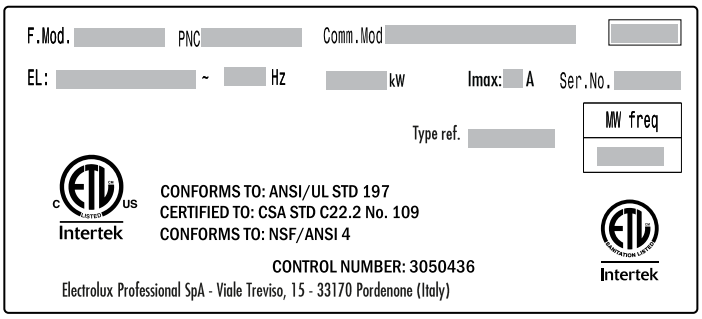

The meaning of the various information given on it is listed below:

PNC	production number code
Comm.Mod.	commercial description
Ser. No.	serial number
Type Ref.	certification group of the appliance
F.Mod.	factory description of product
Natural gas	delivered gas type pressure in W.C. / mBar
Propane	delivered gas type pressure in W.C. / mBar
Gas rating (Nat. Gas)	gas power in BTU/h / kW
Gas rating (Propane)	gas power in BTU/h / kW
EL	power supply voltage
Hz	power supply frequency
kW	power input
Imax	Max current
A	absorbed current

C GENERAL INFORMATION

C.1 Introduction

This manual contains information relevant to various appliances. The product images in this guide are only an example.

The drawings and diagrams given in the manual are not in scale. They supplement the written information with an outline, but are not intended to be a detailed representation of the appliance supplied.

The numerical values given on the appliance installation diagrams refer to measurements in millimeters and/or inches.

C.2 Testing and inspection

Our appliances have been designed and optimized, with laboratory testing, in order to obtain high performance and efficiency.

CAUTION

For Energy Star-listed 20 grids ovens models performances are obtained with the standard-supplied trolley, which is available also as additional accessory.

Passing of the tests (visual inspection - electrical test - functional test) is guaranteed and certified by the specific enclosures.

C.3 Copyright

This manual is intended solely for consultation by the operator and can only be given to third parties with the permission of Electrolux Professional.

C.4 Keeping the manual

The manual must be carefully kept for the entire life of the appliance, until scrapping. The manual must stay with the appliance in case of transfer, sale, hire, granting of use or leasing.

C.5 Recipients of the manual

This manual is intended for:

- the carrier and handling personnel;
- installation and commissioning personnel;
- specialised personnel (see service manual).

C.6 Definitions

Listed below are the definitions of the main terms used in the manual. It is advisable to read them carefully before use.

Operator	appliance installation, adjustment, use, maintenance, cleaning, repair and transport personnel.
Manufacturer	Electrolux Professional or any other service centre authorised by Electrolux Professional.
Operator for normal appliance use	an operator who has been informed and trained regarding the tasks and hazards involved in normal appliance use.

Customer Care service or specialised personnel	an operator instructed/trained by the Manufacturer and who, based on his professional and specific training, experience and knowledge of the accident-prevention regulations, is able to appraise the operations to be carried out on the appliance and recognise and prevent any risks. His professionalism covers the mechanical, electrotechnical and electronics fields etc.
Danger	source of possible injury or harm to health.
Hazardous situation	any situation where an operator is exposed to one or more hazards.
Risk	a combination of probabilities and risks of injury or harm to health in a hazardous situation.
Protection devices	safety measures consisting of the use of specific technical means (guards and safety devices) for protecting operators against risks.
Guard	an element of a appliance used in a specific way to provide protection by means of a physical barrier.
Safety device	a device (other than a guard) that eliminates or reduces the risk; it can be used alone or in combination with a guard.
Customer	the person who purchased the appliance and/or who manages and uses it (e. g. company, entrepreneur, firm).
Electrocution	an accidental discharge of electric current on a human body.

C.7 Responsibility

The Manufacturer declines any liability for damage and malfunctioning caused by:

- non-compliance with the instructions contained in this manual;
- repairs not carried out in a workmanlike fashion, and replacements with parts different from those specified in the spare parts catalogue (the fitting and use of non-original spare parts and accessories can negatively affect appliance operation and invalidates the original manufacturer warranty);
- operations carried out by non-specialised personnel;
- unauthorized modifications or operations;
- missing, lack or inadequate maintenance;
- improper appliance use;
- unforeseeable extraordinary events;
- use of the appliance by uninformed and / or untrained personnel;
- non-application of the current provisions in the country of use, concerning safety, hygiene and health in the workplace.

The Manufacturer declines any liability for:

- damage caused by arbitrary modifications and conversions carried out by the user or the Customer;
- inaccuracies contained in the manual, if due to printing or translation errors.

The employer, workplace manager or service technician are responsible for identifying and choosing adequate and suitable personal protection equipment to be worn by operators, in compliance with regulations in force in the country of use.

Any supplements to the installation, use and maintenance manual the Customer receives from the Manufacturer will form an integral part of the manual and therefore must be kept together with it.

D TRANSPORT, HANDLING AND STORAGE

D.1 Introduction

Transport (i. e. transfer of the appliance from one place to another) and handling (i. e. transfer inside workplaces) must occur with the use of special and adequate means.

CAUTION

The appliance must only be transported, handled and stored by specialised personnel, who must have:

- specific technical training and experience in the use of lifting systems;
- knowledge of the safety regulations and applicable laws in the relevant sectors;
- knowledge of the general safety rules;
- personal protection equipment suitable for the type of operation carried out;
- the ability to recognize and avoid any possible hazard.

IMPORTANT
Immediately check for any damage caused during transport.
Inspect the packaging before and after unloading.

D.2 Handling

Arrange a suitable area with flat floor for appliance unloading and storage operations.

D.2.1 Procedures for handling operations

Before lifting:

- send all operators to a safe position and prevent persons from entering the handling area;
- make sure the load is stable;
- make sure no material can fall during lifting. Manoeuvre vertically in order to avoid impacts;
- handle the appliance, keeping it at minimum height from the ground.

For correct and safe lifting operations:

- use the type of equipment most suitable for characteristics and capacity (e.g. electric pallet truck or lift truck);
- cover sharp edges;
- check the forks and lifting procedures according to the instructions given on the packing.

D.2.2 Shifting

The operator must:

- have a general view of the path to be followed;
- stop the manoeuvre in case of hazardous situations.

D.2.3 Placing the load

- Before placing the load, make sure the way is free and that the floor is flat and can take the load.
- Remove the appliance from the wooden pallet, move it to one side, then slide it onto the floor.

D.3 Customer packaging checks

- The forwarder is responsible for the goods during transport and delivery.
- Make a complaint to the forwarder in case of visible or hidden damage.
- Specify any damage or shortages on the dispatch note.
- The driver must sign the dispatch note: the forwarder can reject the claim if the dispatch note is not signed (the forwarder can provide the necessary form).
- For hidden damage or shortages becoming apparent only after unpacking, request the forwarder for inspection of the goods within and no later than 15 days after delivery.

After packaging checks

1. Remove the packaging.
   Take care when unpacking and handling of the appliance to not cause any shocks on itself.
2. Keep all the documentation contained in the packaging.

D.4 Storage

The appliance and/or its parts must be stored and protected from damp, in a non-aggressive place, free of vibrations and with room temperatures between 14 °F[– 10 °C] and 122 °F [50 °C].

The place where the appliance is stored must:

- can take the appliance load,
- have a flat support surface to avoid deforming the appliance or damage to the support feet.

E TECHNICAL DATA

E.1 ELECTRICAL models data

No. of grids		MODELS											
		6 Grids 1/1		6 Grids 2/1		10 Grids 1/1		10 Grids 2/1		20 Grids 2/1		20 Grids 2/1	
Power supply voltage	V	208	480	208	480	208	480	208	480	208	480	208	480
Phases	No.	3~	3~	3~	3~	3~	3~	3~	3~	3~	3~	3~	3~
Maximum rated current	A	30,8	13,4	59,4	25,7	52,7	22,9	103,8	45,0	104,6	45,3	181,5	78,7
Frequency	Hz	60		60		60		60		60		60	
Electrical power absorbed	kW	11,1		21,4		19		37,4		37,7		65,4	
Fan motor power rating	kW	0,56		0,94		0,56		0,94		1,1		1,9	
Steam unit power rating	kW	9		18		18		36		36		54	
Convection unit power rating	kW	10		20		18		34		36		63	

E.2 ELECTRICAL and GAS models data

No. of grids		MODELS					
		6 Grids 1/1	6 Grids 2/1	10 Grids 1/1	10 Grids 2/1	20 Grids 1/1	20 Grids 2/1
Maximum oven load	Kg	30	60	50	100	100	200
Maximum pan/tray load	Kg	15	30	15	30	15	30
Weight ELECTRIC models	Kg	125,5	148,5	149,5	187	154	187
Weight GAS Models [1]	Kg	140,5	163,5	157,5	201	162	201
Water pressure	kPa	100 – 600	100 – 600	100 – 600	100 – 600	100 – 600	100 – 600

1. Models with boiler and triple glass door

E.3 GAS models data

6 Grids models

No. of grids		MODELS							
		6 Grids 1/1				6 Grids 2/1			
		with Boiler		Boilerless		with Boiler		Boilerless	
Power supply voltage	V	120				120			
Frequency	Hz	60				60			
Electrical power absorbed	kW	1,1				1,5			
Maximum rated current	A	9,3				12,4			
Gas types		Natural	Propane	Natural	Propane	Natural	Propane	Natural	Propane
Nominal heat output[1]	BTU/h (kW)	76429 (22,4)		48109 (14,1)	43332 (12,7)	128632 (37,7)		96560 (28,3)	86665 (25,4)
Boiler unit nominal heat output	BTU/h (kW)	52204 (15,3)	47086 (13,8)	-		64487 (18,9)	57663 (16,9)	-	

6 Grids models (cont'd.)

No. of grids		MODELS							
		6 Grids 1/1				6 Grids 2/1			
		with Boiler		Boilerless		with Boiler		Boilerless	
Convector unit nominal heat output	BTU/h (kW)	48109 (14,1)	43332 (12,7)	48109 (14,1)	43332 (12,7)	96560 (28,3)	86665 (25,4)	96560 (28,3)	86665 (25,4)
NPT connection		1/2 ″				1/2 ″			

1. Values referred at 15 °C, 1013 mbar.

10 Grids models

No. of grids		MODELS							
		10 Grids 1/1				10 Grids 2/1			
		with Boiler		Boilerless		with Boiler		Boilerless	
Power supply voltage	V	120				120			
Frequency	Hz	60				60			
Electrical power absorbed	kW	1,1				1,5			
Maximum rated current	A	9,3				12,4			
Gas types		Natural	Propane	Natural	Propane	Natural	Propane	Natural	Propane
Nominal heat output[1]	BTU/h (kW)	124538 (36.5)		84618 (24,8)	75746 22,2	189025 55,4		14916 (41,3)	126244 (37,0)
Boiler unit nominal heat output	BTU/h (kW)	84618 (24,8)	75746 22,2	-		98607 (28,9)	90077 (26,4)	-	
Convector unit nominal heat output	BTU/h (kW)	84618 (24,8)	75746 22,2	84618 (24,8)	75746 22,2	140916 (41,3)	126244 (37,0)	14916 (41,3)	126244 (37,0)
NPT connection		1/2 ″				1/2 ″			

1. Values referred at 15 °C, 1013 mbar.

20 Grids models

No. of grids		MODELS							
		20 Grids 1/1				20 Grids 2/1			
		with Boiler		Boilerless		with Boiler		Boilerless	
Power supply voltage	V	120				120			
Frequency	Hz	60				60			
Electrical power absorbed	kW	1,8				2,5			
Maximum rated current	A	15,0				20,8			
Gas types		Natural	Propane	Natural	Propane	Natural	Propane	Natural	Propane
Nominal heat output[1]	BTU/h (kW)	217344 (63.7)		168894 (49,5)	151493 (44,4)	402275 (117,9)		281490 (82,5)	252829 (74,1)
Boiler unit nominal heat output	BTU/h (kW)	96560 (28,3)	90077 (26,4)	-		241228 (70,7)	216662 (63,5)	-	
Convector unit nominal heat output	BTU/h (kW)	168894 (49,5)	151493 (44,4)	168894 (49,5)	151493 (44,4)	281490 (82,5)	252829 (74,1)	281490 (82,5)	252829 (74,1)
NPT connection		1 ″				1 ″			

1. Values referred at 15 °C, 1013 mbar.

Gas supply pressure

Type of gas	Unit	Models					
		6 Grids 1/1	6 Grids 2/1	10 Grids 1/1	10 Grids 2/1	20 Grids 1/1	20 Grids 2/1
natural gas	I.W.C. (mbar)	7 (17,4)	7 (17,4)	7 (17,4)	7 (17,4)	7 (17,4)	7 (17,4)
propane	I.W.C. (mbar)	11 (27,4)	11 (27,4)	11 (27,4)	11 (27,4)	11 (27,4)	11 (27,4)

E.4 Appliance dimensions

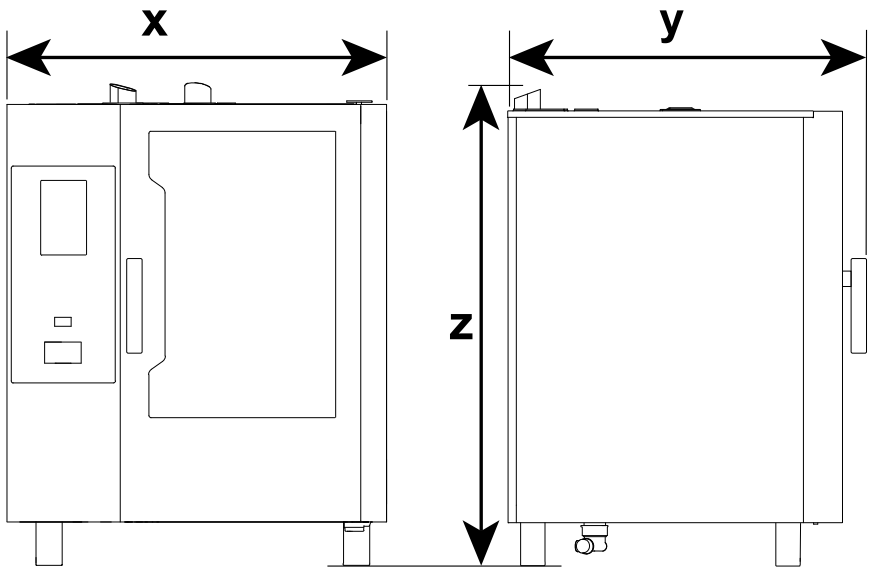

Models	Width		Depth		Height	
	x		y		z	
	mm	inches	mm	inches	mm	inches
6 grids 1/1	867	34″ 9/64	850	33″ 15/32	858	33″ 25/32
6 grids 2/1	1090	42″ 29/32	1046	41″ 3/16	858	33″ 25/32
10 grids 1/1	867	34″ 9/64	850	33″ 15/32	1108	43″ 5/8
10 grids 2/1	1090	42″ 29/32	1046	41″ 3/16	1108	43″ 5/8
20 grids 1/1	911	35″ 55/64	925	36″ 27/64	1855	73″ 1/32
20 grids 2/1	1162	45″ 3/4	1125	44″ 27/64	1855	73″ 1/32

E.5 Conversion tables

	°dH	°f	°e	ppm	mmol/l	gr/gal (USA)	mval/kg
1 °dH	1	1,79	1,25	17,9	0,1783	1,044	0,357
1 °f	0,56	1	0,70	10,0	0,1	0,584	0,2
1 °e	0,8	1,43	1	14,32	0,14	0,84	0,286
1 ppm	0,056	0,1	0,07	1	0,01	0,0584	0,02
1 mmol/l	5,6	0,001	0,0007	100	1	0,00058	2
1 gr/gal (USA)	0,96	1,71	1,20	17,1	0,171	1	0,342
1 mval/kg	2,8	5,0	3,5	50	0,5	2,922	1

	CaO [mg/l]	$CaCO_3$ [mg/l]	Ca^{2+} [mg/l]
°dH (Germany)	10,0	17,86	7,14
°f (France)	5,60	10,0	4,00
°e (Great Britain)	8,01	14,3	5.72
ppm (USA)	0.56	1,0	0.40
mmol/l (chem. cons.)	56,00	100,0	39,98
gr/gal (USA)	9,60/64,8	17,11	6,85
mval/kg (milliequivalent)	28,00	50,0	19.99

F PRODUCT DESCRIPTION

F.1 Appliance overview

6 -10 GN model

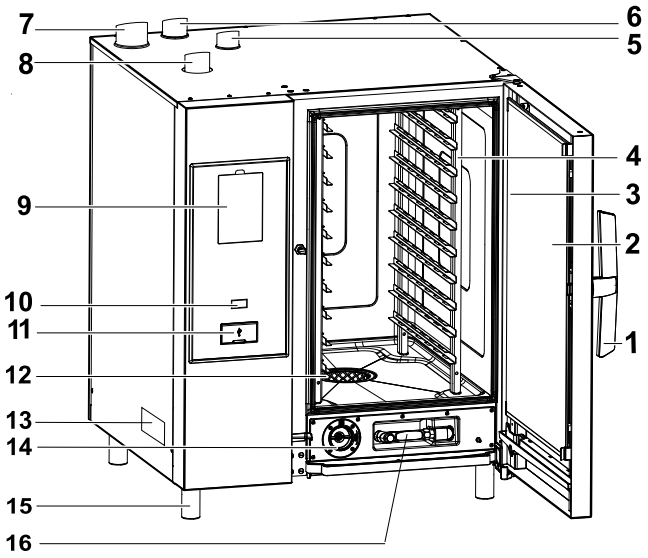

20 GN model

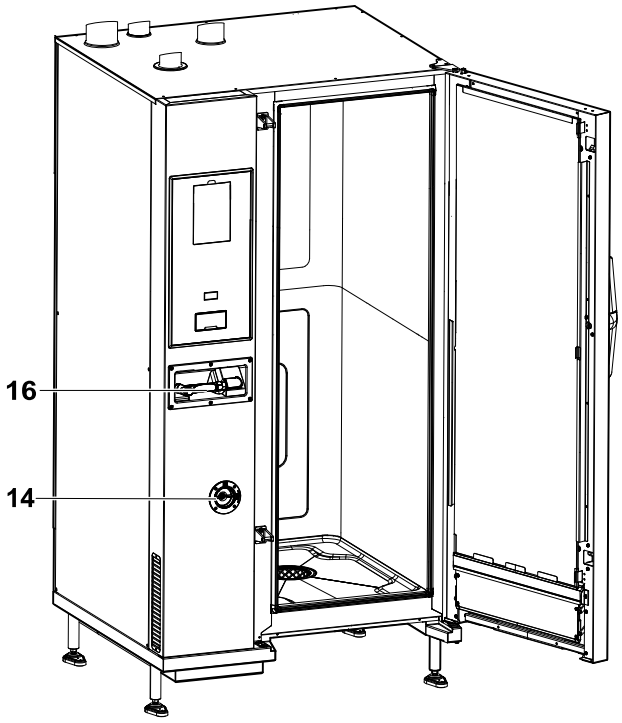

1. Door handle (shape depending on the model)
2. Triple glass door
3. Led bar for lighting cavity
4. Grids support
5. Exhaust gas cavity heat exchanger (all gas models)
6. Steam discharge (electric and gas models)
7. Exhausting gas from steam generator (gas models with boiler)
8. Air inlets (electric and gas models)
9. Control panel – display
10. ON/OFF button
11. USB pendrive port
12. Cavity filter – housing for detergent tabs (cavity washing)
13. Data plate
14. Descaling/rinse agent drawer
15. Feet
16. Hand spray cleaning unit, if present in your model

NOTE!
The hand spray only works if the oven is switched on.

F.2 Trolley in 20GN models

IMPORTANT
In all 20 Grids models run the cleaning cycles only with trolley inside the oven.
It helps the sealing in closing the bottom openings between the cavity and the door.

Only in ovens 20 GN 2/1 Electric models

To obtain a better cooking performance during cooking cycle insert the accessory “panel deflector“ over the first rack of the trolley (refer to the picture below - PNC accessory: 922445)

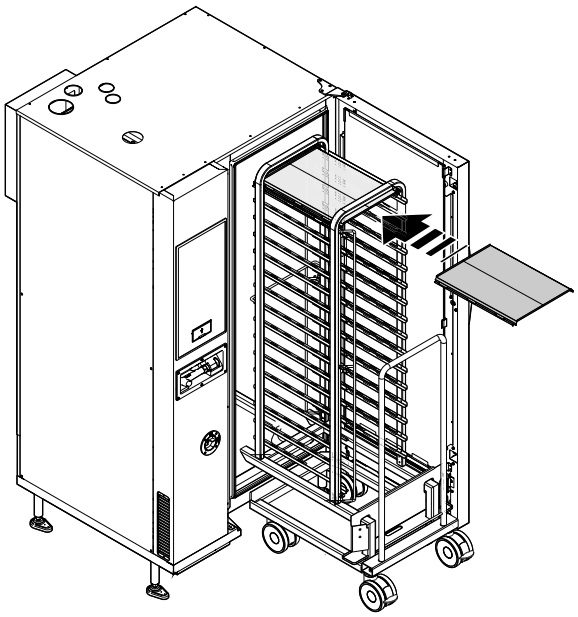

G INSTALLATION AND ASSEMBLY

WARNING
Refer to “*Personal protection equipment*“.

G.1 Introduction

WARNING
Refer to “*WARNING and Safety Information*“.

To ensure correct operation of the appliance and maintain safe conditions during use, carefully follow the instructions given in this chapter.

Check and, if necessary, level the appliance after positioning. Incorrect levelling can cause appliance malfunctioning.

CAUTION
Keep the ventilation openings in the appliance casing or in the installation structure free of any obstructions.

G.2 Customer's responsibilities

The tasks and works required of the Customer are:

- check the floor planarity on which the appliance is placed;
- arrange an earthed power socket of suitable capacity for the input specified on the data plate;
- prearrange a high-sensitivity manual-reset magneto-thermal circuit-breaker;
- prearrange a device lockable in the open position for the connection to the power supply.
- install a rapid gas shutoff valve ahead of each individual appliance (depending on the model). Install the valve in an easily accessed place.

NOTE!
For information regarding the electrical connection, refer to “A.8 *Electrical connection*“.

G.3 Installation

G.3.1 Place of installation

- Install the appliance in compliance with the current local and national regulations.

G.3.1.1 Ventilation

The ventilation system will allow the unit to function properly while removing unwanted vapors and products of combustion from the operating area.

The appliance must be vented with a properly designed mechanically driven exhaust hood. The hood should be sized to completely cover the equipment plus an overhang of a least 6″/ 15.3 cm on all sides not adjacent to a wall. The capacity of the should be sized appropriately along whit provisions for adequate makeup air.

Refer to your local ventilation codes. In the absence of local codes, refer to the National ventilation code titled, “Standard for the Installation of Equipment for the Removal of Smoke and Grease Laden Vapors from Commercial Cooking Equipment“, NFPA-96- Latest Edition.

It is recommended that the ventilation system and duct work be checked at prevailing intervals as specified by the hood manufactured.

NOTE!
Proper ventilation is the owner's is responsibility. Any problem due to improper ventilation will not be covered by the warranty.

G.3.1.2 Reference standards

NOTE!
The electric supply installation must satisfy the requirements of the appropriate statutory authority, such as the National Electrical Code (NEC) ANSI/ NFPA70, (U.S.A.): the Canadian Electrical Code, CSA C22.2; or other applicable regulations.

NOTE!
The electric supply connection must meet all national and local electrical code requirements.

NOTE!
The installation of this unit must conform to local codes or, in the absence of local codes, to all National Codes governing safety and good trade practices, and to the National Gas Code ANSI Z223.1/NFPA 54, or the Natural Gas and Propane Installation Code, CSA B149.1.

Local codes regarding installation vary greatly from one area to another. This equipment is to be installed to comply with the applicable federal, state or local codes.

The National Fire Protection Association, Inc states in its NFPA 96 latest edition that local codes are the “authority having jurisdiction“ when it comes to installation requirements for equipment. Therefore, installations should comply with all local codes.

G.3.2 Unpacking

Table top models (6 – 10 GN)

1. Remove the copper staples and the cardboard from the appliance;

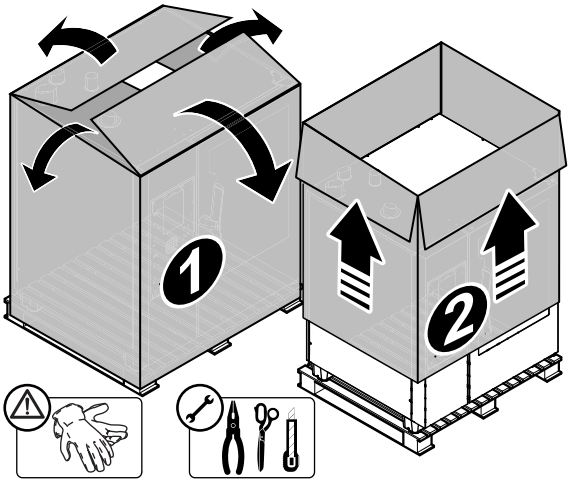

2. Cut the plastic straps fixing the appliance to the pallet;

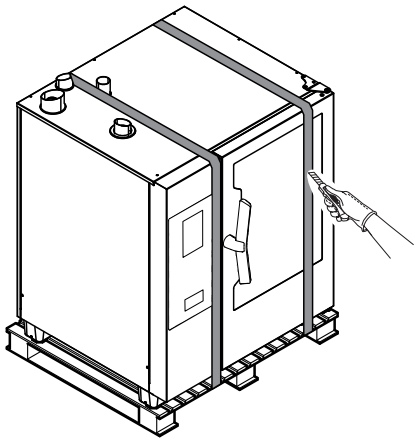

3. Lift the appliance with a lift truck, remove the pallet and position the appliance in the place of use;

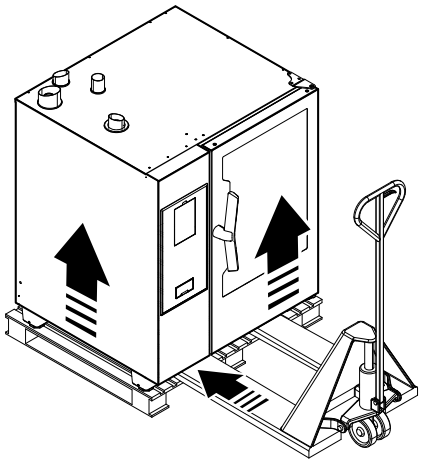

Vertical models (20 GN)

1. Cut the plastic straps fixing the cardboard enveloping the appliance;
2. Remove the cover.

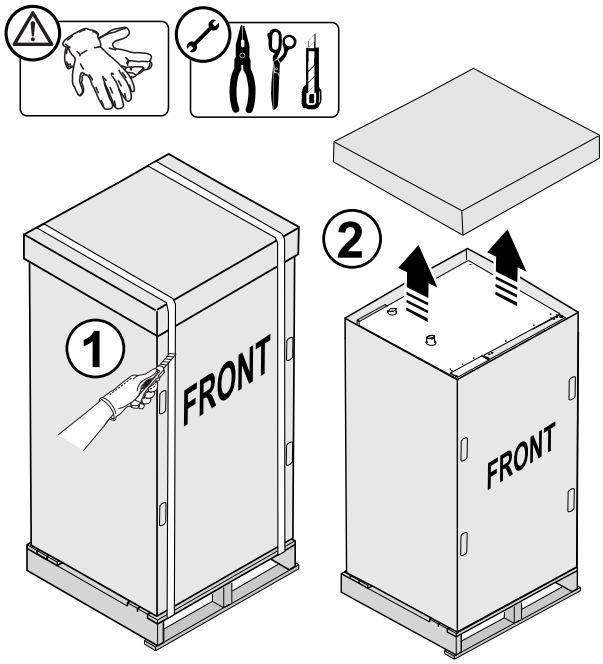

3. Remove the upper cardboard corners, the protection for the handle and the 4 cardboard wrapping the appliance;

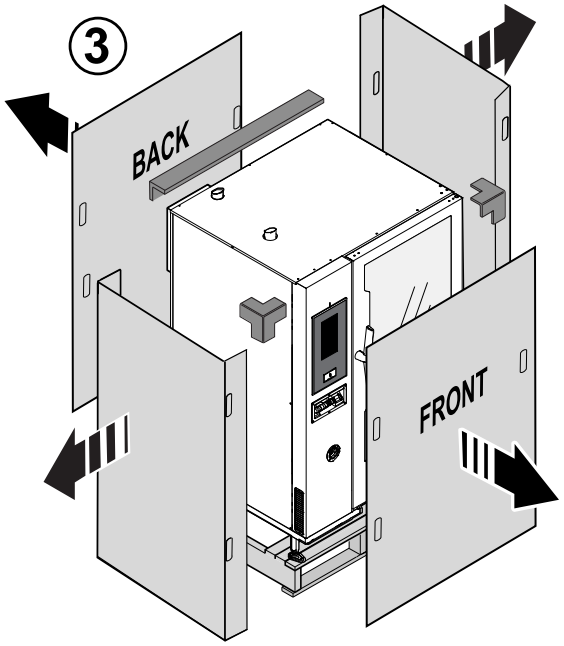

4. With a lift truck, remove the pallet and position the appliance in the place of use;

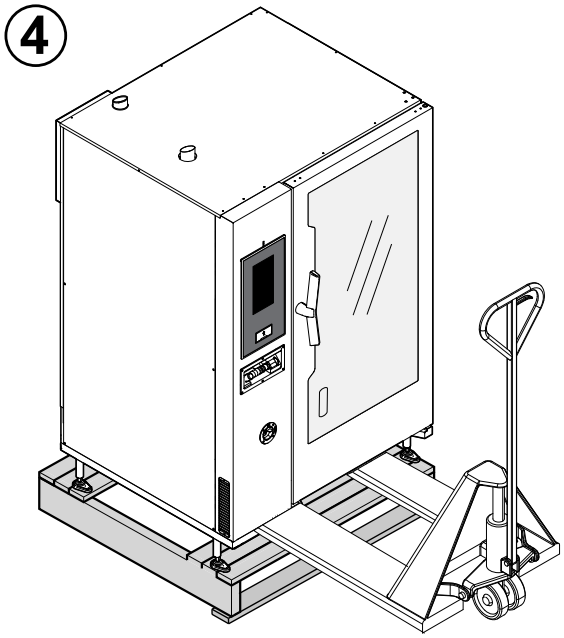

IMPORTANT
Make sure not to damage the drain when removing the appliance from the pallet.

G.3.2.1 Transport of the appliance

- Keep the device's barycenter in mind to prevent it from tipping over.

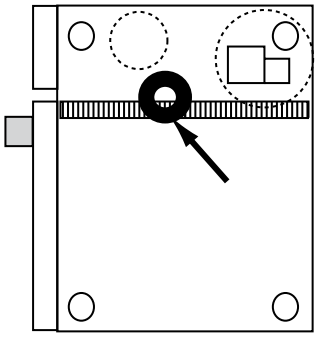

- If you use the lift truck, keep also in mind the required spaces and the entrance dimensions.

The minimum entrance dimensions are:

Required entrance dimen-sions		Appliance models					
		6 GN 1/1	6 GN 2/1	10 GN 1/1	10 GN 2/1	20 GN 1/1	20 GN 2/1
x	mm	850	1046	850	1046	925	1125
	inch	33″ 15/32	41″ 3/16	33″ 15/32	41″ 3/16	36″ 27/64	44″ 27/64

G.3.3 Disposal of packing

The packing must be disposed of in compliance with the current regulations in the country where the appliance is used. All the packing materials are environmentally friendly.

They can be safely kept, recycled, or burned in an appropriate waste incineration plant. Recyclable plastic parts are marked as follows:

PE	**Polyethylene** • Outer wrapping • Instructions bag
PP	**Polypropylene** • Straps
PS	**Polystyrene foam** • Corner protectors

The parts in wood and cardboard can be disposed of, respecting the current regulations in the country where the appliance is used.

G.3.4 Positioning

For the overall space required and connection dimensions, refer to the installation diagrams;

NOTE!
The appliance is not suitable for built-in installation.

When positioning the appliance keep in mind the following minimum distances:

Minimum distances for positioning

normal working	right / rear distance minimum 50 mm mm[1]
service conditions	left side distance minimum 500 mm
work close to heat source	left side distance 350 to 500 mm

1. For 20 grids models it is suggested to leave a space of minimum 120 mm for water hoses running.

- Leave a space of at least 500 mm between the left side of the appliance and the other surfaces to enable maintenance operations.

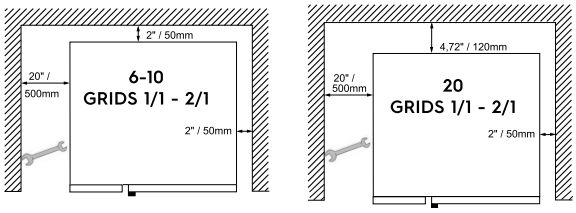

- In any case if it's necessary to carry out maintenance works on the appliance, slide it forwards.

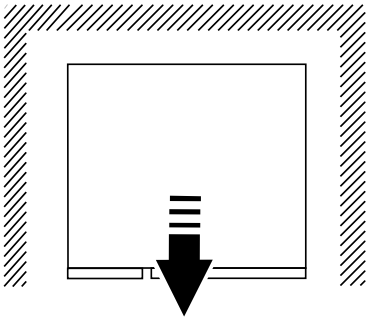

- The left gap must be a minimum of 350 mm **if heat sources are acting** on the left side of the appliance.

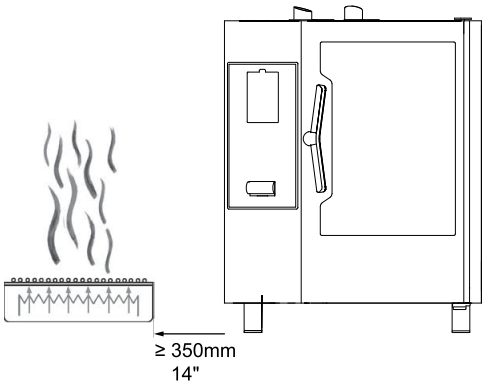

If it is not possible to keep the left side of the appliance a sufficient distance away from heat sources, a heat shield can reduce thermal loads (see accessories catalogue).

- If steam from the ventilation pipe cannot be directed into an exhaust hood or a ventilating ceiling, there must be at least 500 mm mm clearance space above the device.

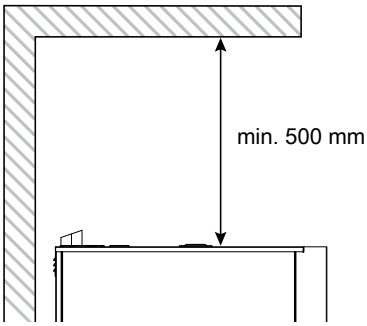

- Position the appliance on a flat surface.
  If necessary, adjust the height of the worktop by means of the adjustable feet (if available).

6 – 10 GN models

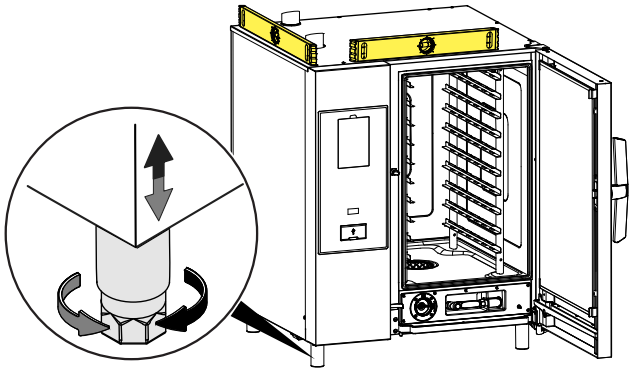

20 GN models

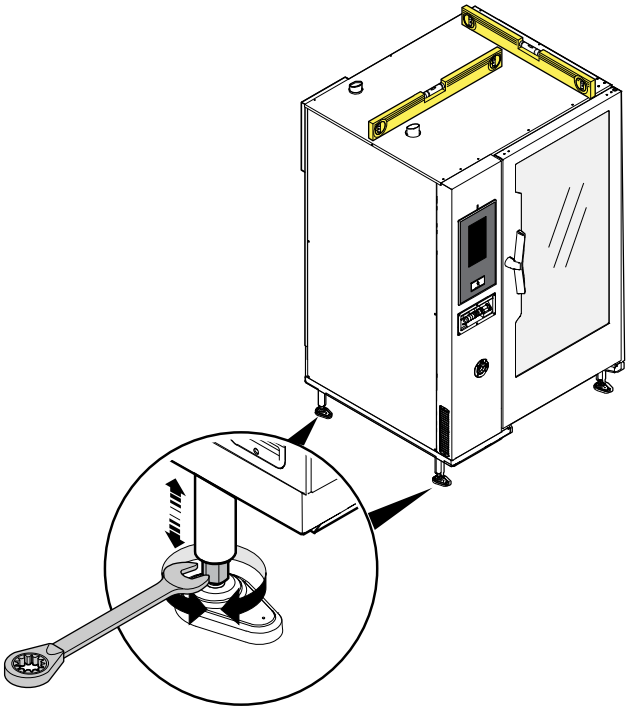

CAUTION
The appliance must be level.

G.3.5 Installation on castors

For installations where castors (available as accessory) have been mounted in place of original feet, **adequate means must be provided to limit the movement of the appliance** without depending on or transmitting stress to the electrical conduit, e.g. make use of a chain.

The restraining means are to be attached to the wall behind the oven; the wall material shall be suitable to resist to accidental and sudden strains.

The oven shall be installed using flexible conduit.

G.3.6 Tabletop models

For safety reasons, tabletop models should only be placed on top a manufacturer-original oven stand or cupboard structure.

Choose the appropriate structure in the accessories catalogue according to your model.

Mounting onto an oven stand (size GN 1/1 – 2/1)

1. Replace the oven feet with the special feet supplied with the oven stand accessory.

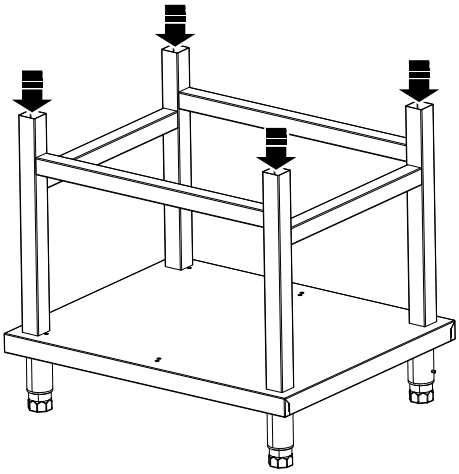

2. Using appropriate lifting equipment, position the appliance on the oven stand by inserting the locating feet into the tubular uprights.

Mounting onto a cupboard (sizes GN 1/1 – 2/1)

1. Disassemble the rear panel “B“ and control panel “A“ (if expected);

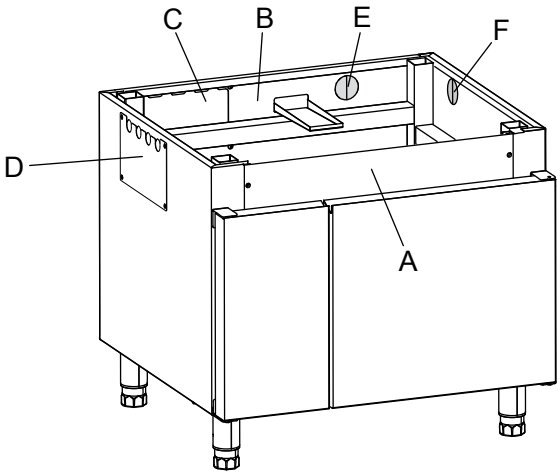

2. Replace the oven feet with the special feet supplied with the cupboard accessory;
3. Using appropriate lifting equipment, place the appliance onto the cupboard by inserting the locating feet into the tubular uprights;
4. Refit the control panel “A“ and the rear panel “B“.
5. Proceed with the oven connections.

IMPORTANT
The connection pipes of the oven can be run either on the back either on the side.

- remove and replace the panels “C“ and “D“ between them;
- remove the pre-cutted plates “E“ and “F“ to let the drain pipe pass through the hole on the back or at the side;

G.3.7 20GN models adjustments

It is suggested that specific precautions be taken when installing the 20GN oven models.

Verify the floor slope

1. If the floor slope is above the limit (see the illustration below) is it necessary to install the accessory “Leveling Ramp“ [PNC 922715 for 20GN 1/1 and 922716 for 20GN 2/1].
   Choose the appropriate item in the accessories catalogue according to your model.

20 GN 1/1

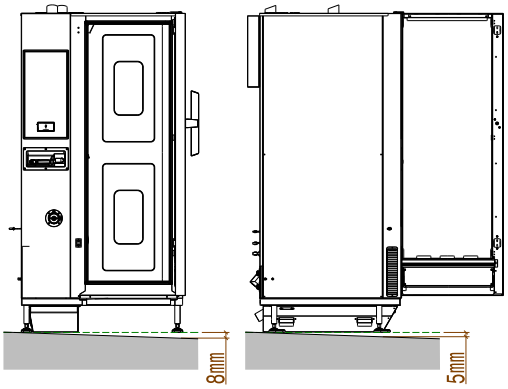

20 GN 2/1

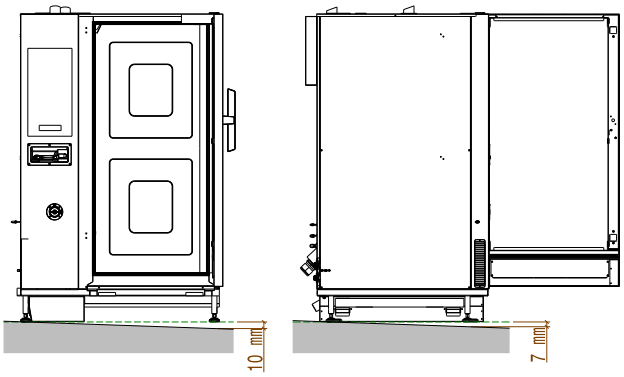

2. In case the floor slope is above the limits, “Leveling ramp“ is mandatory.

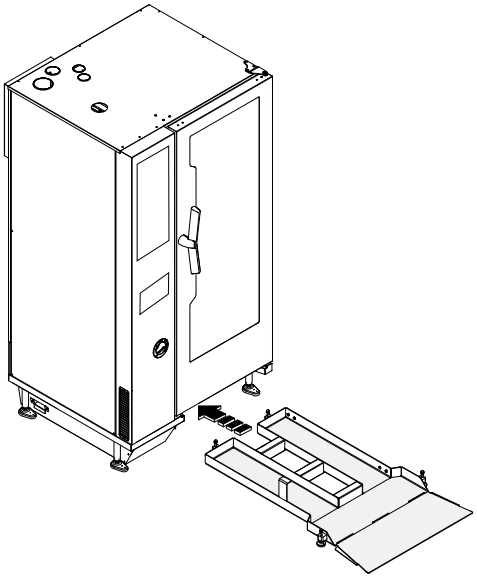

Check distance from oven cavity to the floor

3. If the floor slope is between the limits, adjust the **front** legs to have the correct height from the floor.

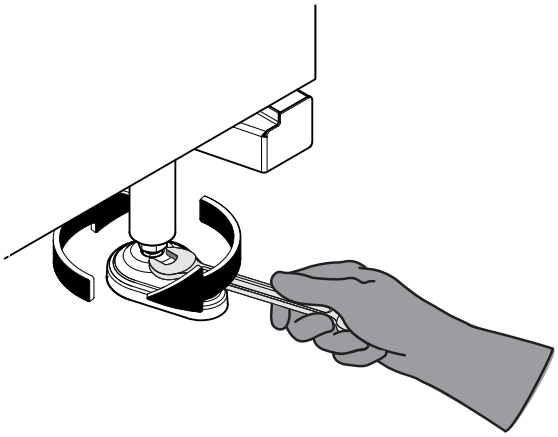

4. Measure it from the cavity to the floor. The measurement should be taken in the centre, then check that left side and right side must be within the tolerance of ± 2.5 mm. See the illustration below.
   The correct distance has to be 285 mm ± 2,5 mm

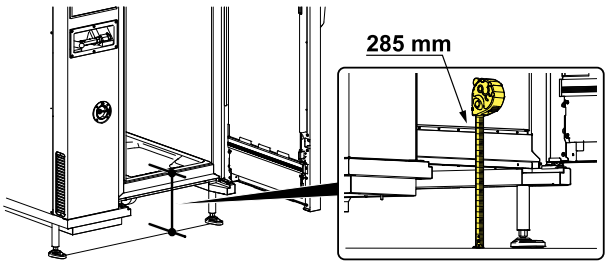

5. After set the front legs of the oven to 285 mm it is necessary to level the oven by correctly adjusting the **rear** legs.

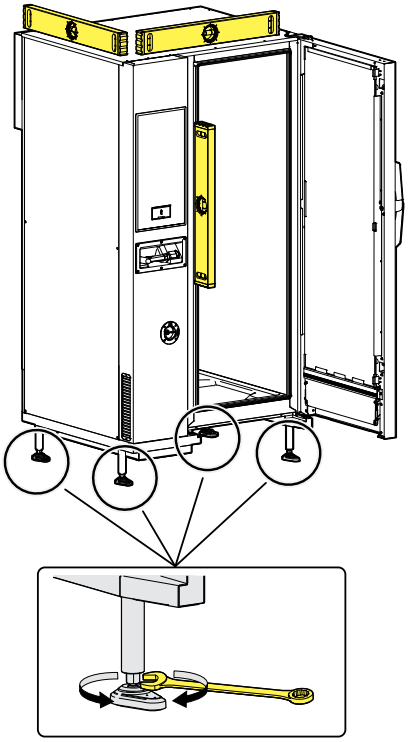

G.3.8 Stacking installations

The following tables indicate the possible appliance combinations for stacking installations.

OVENS 10 GN 1/1 – 10 GN 2/1

Position	Appliance / base type			
ABOVE	OVEN 10 GN 1/1	Maximum total height mm [inches]	OVEN 10 GN 2/1	Maximum total height mm [inches]
BELOW	OPEN SUPPORT or NEUTRAL CUPBOARD or HOT CUPBOARD or BLAST CHILLER 30kg	1778 [70″] 1778 [70″] 1778 [70″]	OPEN SUPPORT or NEUTRAL CUPBOARD or HOT CUPBOARD	1778 [70″] 1778 [70″] 1778 [70″]

OVENS 6 GN 1/1 – 6 GN 2/1

Position	Appliance / base type			
ABOVE	**OVEN 6 GN 1/1**	**Maximum total height mm [inches]**	**OVEN 6 GN 2/1**	**Maximum total height [inches]**
BELOW	OVEN 6 GN 1/1	electrical models 1736 [68″ 11/32][1] gas models 1766 [69″ 17/32][1] electrical models 1976 [77″ 51/64][2] gas models 2006 [78″ 31/32][2]	OVEN 6 GN 2/1	electrical models 1736 [68″ 11/32] [1] gas models 1766 [69″ 17/32][1] electrical models 1976 [77″ 51/64][2] gas models 2006 [78″ 31/32][2]
	or		or	
	OVEN 10 GN 1/1	electrical models 1986 [78″ 3/16] gas models 2016 [79″ 3/8]	OVEN 10 GN 2/1	electrical models 1986 [78″ 3/16] gas models 2016 [79″ 3/8]
	or			
	OPEN SUPPORT[2]	1528 [60″ 5/32]	OPEN SUPPORT[2]	1528 [60″ 5/32]
	or		or	
	NEUTRAL CUPBOARD[2]	1528 [60″ 5/32]	NEUTRAL CUPBOARD[2]	1528 [60″ 5/32]
	or		or	
	HOT CUPBOARD[2]	1528 [60″ 5/32]	HOT CUPBOARD[2]	1528 [60″ 5/32]
	or			
	BLAST CHILLER 30kg[2]	1882 [74″ 3/32]		

1. Without riser
2. With riser

NOTE!
Feet are intended as adjusted at their nominal height.

G.3.9 Fixing oven systems

The installations indicated in the tables above **for safety reasons MUST be fixed to the wall or to the floor** by means of the appropriate accessories included in the appliance or to be ordered, according to your model (kit “Wall brackets“ or kit “Flanged feet“, see accessory list).

IMPORTANT
The same safety provision shall be applied to floor standing ovens, to ship and offshore oil plant installations and to all installations where the extraction or recirculation hood, available as accessory, is staked on the oven.

6 - 10 GN models : Wall fixing with wall brackets

- Fix the stacked ovens to the wall by means of the 2 brackets. See the figure below.

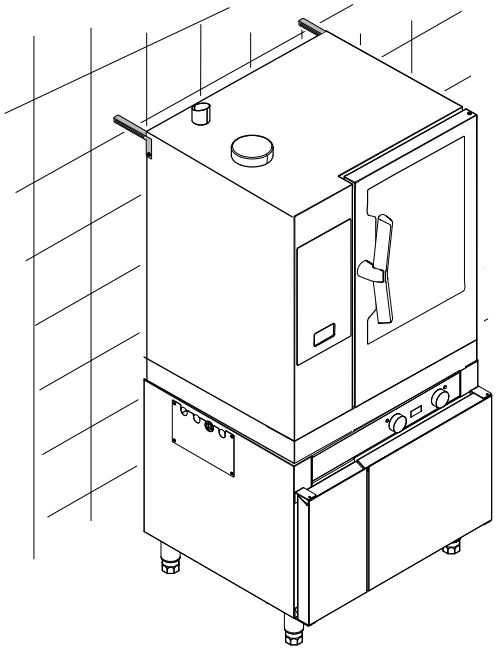

6 - 10 GN models : Floor fixing with flanged feet

If the stacked ovens cannot be fixed to the wall it is necessary to fix them to the floor. Use the “Flanged feet“ kit with 3 holes base for fixing to the floor.

- undo the screws to remove the existing feet of the bottom oven;
- replace them with those of the kit;
- screw the 4 screws (M5x14) in each foot to fix the stacked ovens to the floor.

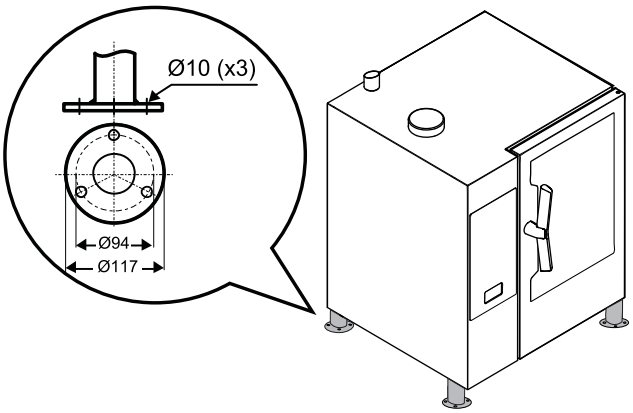

20 GN models : Floor fixing

For safety reasons the floor standing models MUST be fixed to the floor by the two rear feet.

- Drill 2 holes on the rear oven feet;

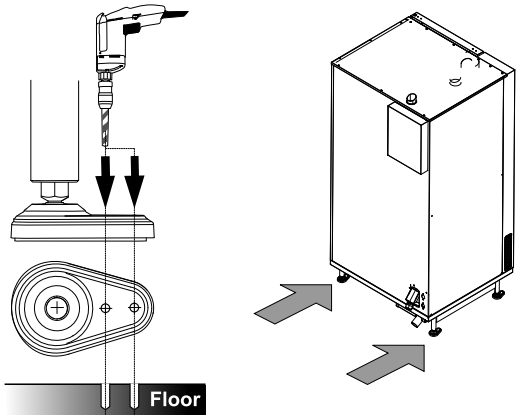

- Secure each foot to the floor by means of two appropriate screws that guarantee a minimal force of 0,3 kN.

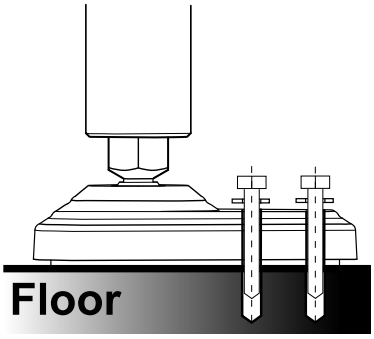

F min= 0,3 kN

G.3.10 Hygienic requirements

For hygiene reasons and in according to the Standard NSF 4 a cover must be installed all around the AIR BREAK box. This cover is intended to be used on floor standing ovens and is included in the stacking kit, available as accessory.

FLOOR STANDING OVENS

To maintain sanitary standards, the cover must ensure water-tightness at the floor junction.

1. Ensure the floor surface is clean, smooth, and free from any irregularities.
2. The cover panels (**A**) already have a gasket along the lower edge . Assemble the panels as shown in the following pictures, around the recessed area on the oven bottom using the screws (**B**) provided with the cover.

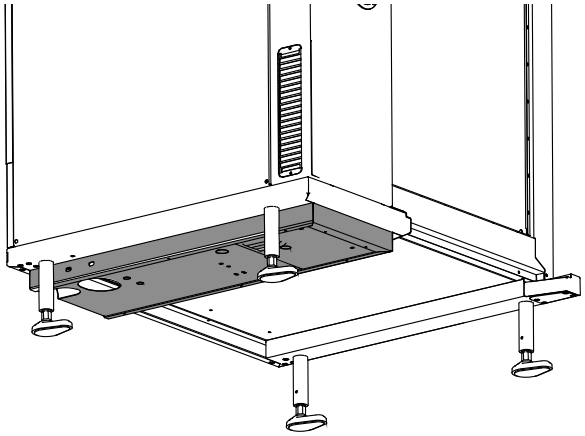

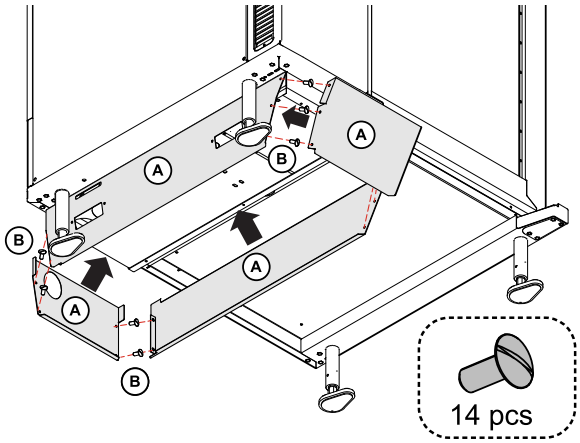

3. At the end, insert the gutters (**C**) into the suitable slots

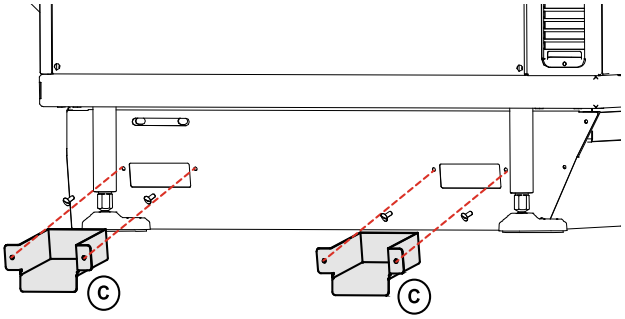

Once the watertight assembly has been done in accordance with the above procedure, it will prevent liquid spillage on adjacent floor surface from passing under inaccessible portions of the appliance.

STACKED OVENS*

Refer to installation instructions provided with the stacking kit.

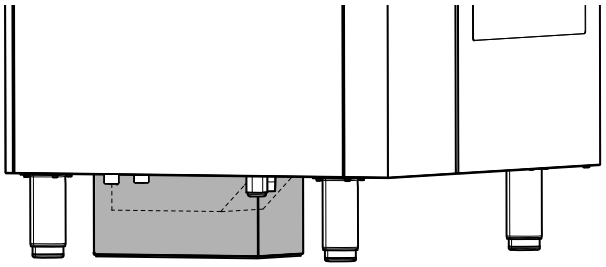

* = The use of the riser is alternative to the cover except for the installations 6 Grids on 10 Grids, where this cover is mandatory.

G.4 Water connection

G.4.1 General information on water connection

NOTE!
Water and waste piping and connections shall comply with the International Plumbing Code 2003, International Code Council (ICC), or to the Uniform Plumbing Code 2003, International Association of Plumbing and Mechanical Officials (IAPMO).

CAUTION
The equipment is to be installed with adequate backflow protection to comply with applicable federal, state and local codes.

IMPORTANT
When connecting the appliance with the flexible hoses to the water system, use always new ones.

The oven has two separate water supply inlets:

1. "**CWI1 – NOT FILTERED WATER SUPPLY**" connection of cold water 3/4″ NTP for:
   - cleaning system;
   - quenching;
   - hand shower (when provided, depending on the model).
2. "**CWI2 – FILTERED WATER SUPPLY**" connection of TREATED cold water 1/2″ NTP for:
   - boiler filling (models with boiler)
   - instant steam generator (boilerless models)

6 – 10 grids models

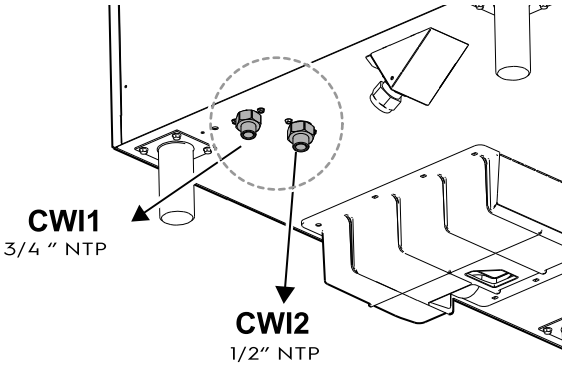

20 grids models

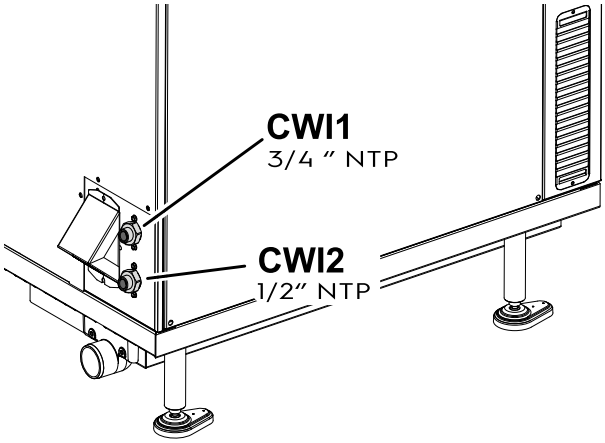

Requirements for water connection

- The water pressure upstream of the oven must be 100 – 600 kPa (1,0 – 6,0 bar / 14,5 – 87psi).
- The maximum water temperature in entrance is 86 °F [30 °C].
- The feed pipes of both inlets must be provided with a mechanical filter and a shutoff valve.
- Before installing the filters run certain amount of water to clear the pipe of any solid particles.

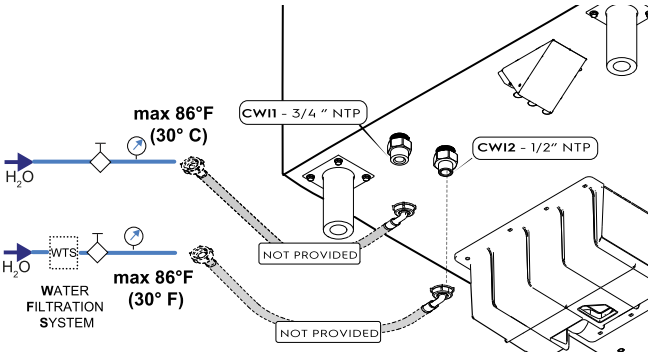

Water connection in stacking installations

- For water connection in stacking installations refer to the following figures:

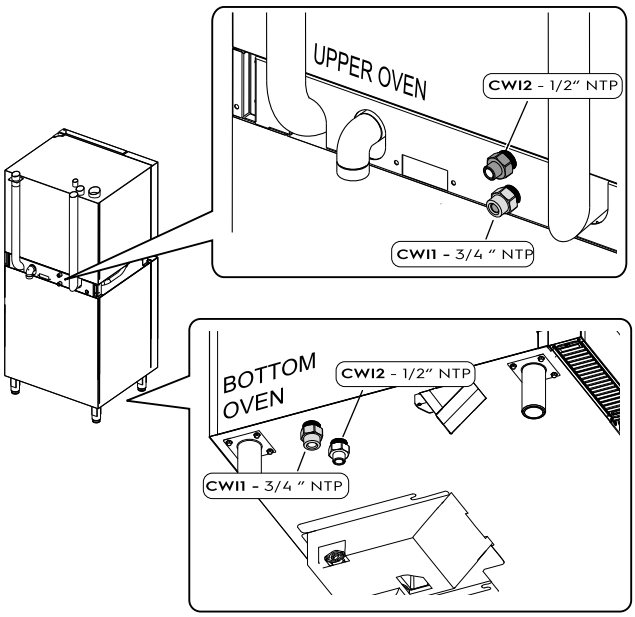

G.4.2 Water characteristics for inlet “CWI2“

In **CWI2** inlet the appliance must be supplied with suitable drinking water also in case of water treatment system (in particular Ph 6,5 ÷ 8,5 and conductivity > 50 µS/cm).

To guarantee correct appliance operation, some water treatment systems may therefore have to be installed.

For that purpose, follow the indications given in the following charts according to your models:

Table A – Electric models with boiler (AISI 316L)

CONDUCTIVITY [µS/cm]	CHLORIDE [ppm]	TREATMENT	TREATMENT CHECK
> 50	< 85[1]	NO	NO
> 50	> 85	OSMOTISATION	VERIFY CHLORIDE < 85, Ph 6,5 ÷ 8,5 AND CONDUCTIVITY > 50 µS/cm
< 50	-	NOT SUITABLE WATER	

Table B – Gas models with boiler

CONDUCTIVITY [µS/cm]	CHLORIDE [ppm]	TREATMENT	TREATMENT CHECK
> 285	< 17	NO	NO
> 285	17 < ppm < 32	NANOFILTERS	TREATED WATER TO FALL INTO THE GREEN AREA OF THE GRAPH **B**
> 285	> 32	WTS[2] + GRAPH **B**	
< 285	-	WTS[2] + GRAPH **B**	
< 50	-	NOT SUITABLE WATER	

Graph B

In case of treatment, check the treated water parameters falling into the green area; in no cases the values have to fall into the grey area)

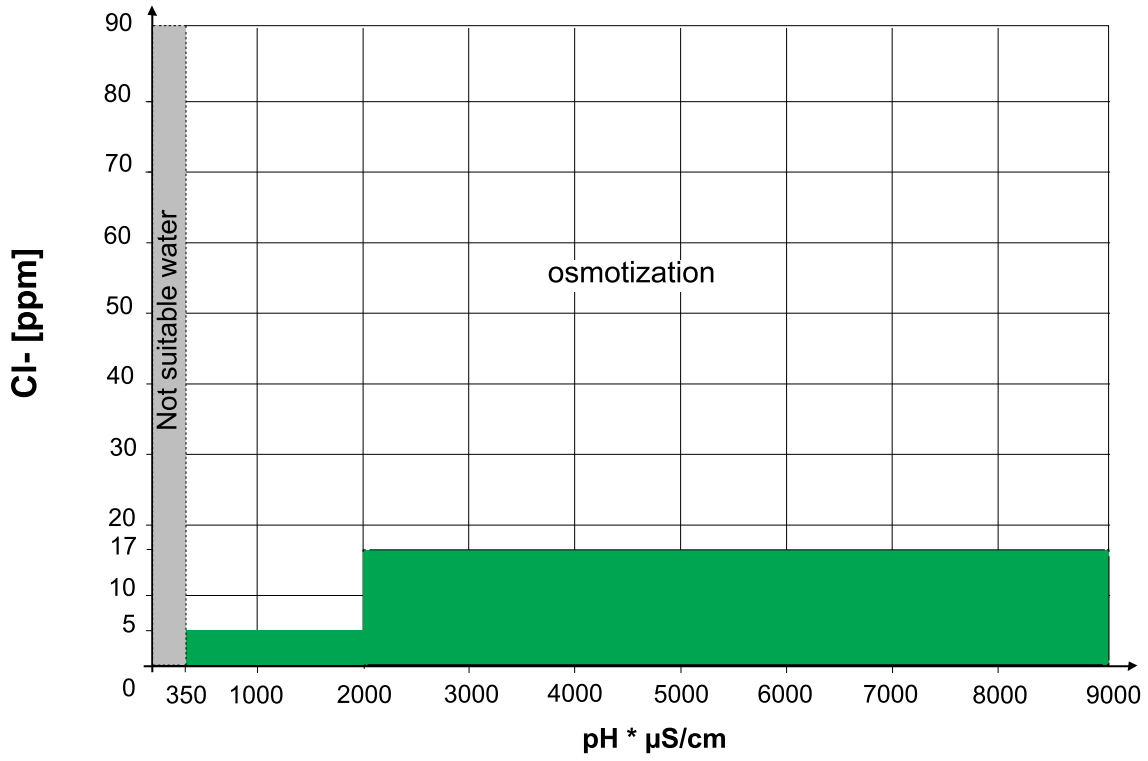

1. For heavy-duty operation – prolonged daily use with predominant steaming and combi cycles - it is recommended that the chloride concentration does not exceed 75 ppm.
2. WTS = Water treatment system

Table C – Gas and electric models without boiler

CONDUCTIVITY [µS/cm]	CHLORIDE [ppm]	HARDNESS [°f]	TREATMENT	TREATMENT CHECK
> 285	< 10	< 5	NO	NO
> 285	< 10	> 5	SOFTNER	AFTER SOFTENING, CHECK HARDNESS < 5 °f
> 285	10 < ppm < 20	-	NANOFILTERS	TREATED WATER TO FALL INTO THE GREEN AREA OF THE GRAPH **C**
> 285	> 20	-	WTS[2] + GRAPH **C**	
< 285	-	-	WTS [2] + GRAPH **C**	

Graph C

In case of treatment, check the treated water parameters falling into the green area; in no cases the values have to fall into the grey area

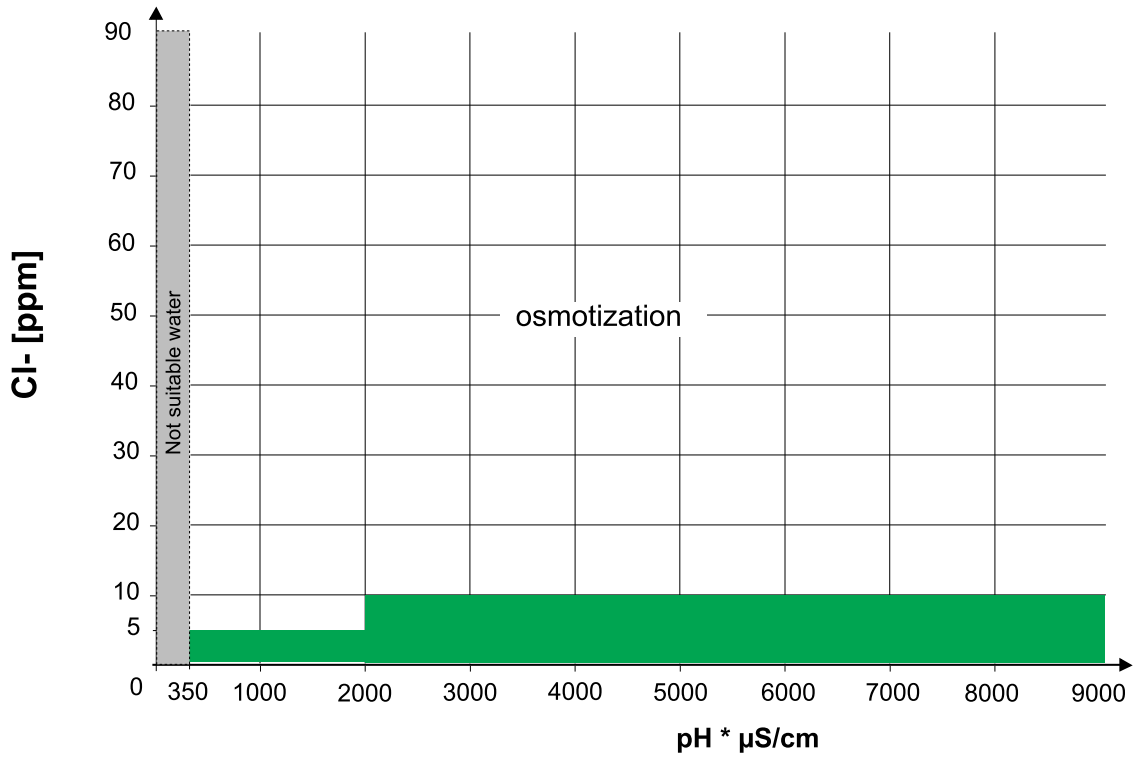

General advice

- Periodical maintenance of the water treatment devices avoids compromising appliance operation and prevents risk of corrosion.
- To prevent damaging the appliance, at every periodical regeneration of the water softener filter, do a filter wash cycle without introducing water into the oven.

IMPORTANT
The manufacturer declines any liability in case of incorrect maintenance.

CAUTION
Do not use dispensers of substances for preventing scale in the pipes (e.g. polyphosphate), they can compromise correct appliance operation.

G.4.3 Check supply pressure

The pressure upstream of the oven must be 100 – 600 kPa (1,0 – 6,0 bar / 14,5 – 87psi).

NOTE!
If the water pressure of the system supply is higher than 6 bar, it is recommend to install a water pressure regulator.

Measure the pressure in dynamic conditions, i. e. during the boiler filling and/or washing phase and at a temperature of 30 °C/86°F.

- The water flow rate for **CWI1** is 0.264 US gal/min (1 l/min) – max 1.585 US gal/min (6 l/min).
- The water flow rate for **CWI2** (treated water) is minimum 0.066 US gal/min (0,25 l/min) – maximum 0.779 US gal/min (2,95 l/

min) for 6 -10 GN in the boiler models and minimum 0.066 US gal/min (0,25 l/min) – maximum 1.518 US gal/min (5,75 l/min) for 20 GN size in the boiler models.

G.4.4 Water draining system

NOTE!
The temperature of wastewater at appliance drain is approximately 212 °F / 100°C.

Water outlet drain:

6 - 10 grids models

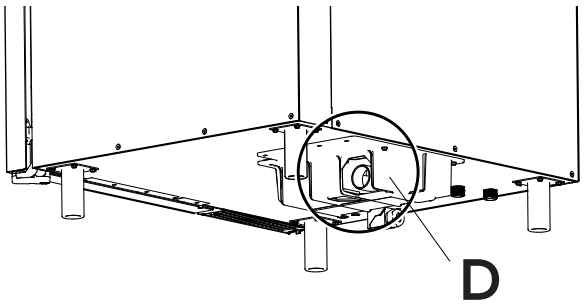

20 grids models

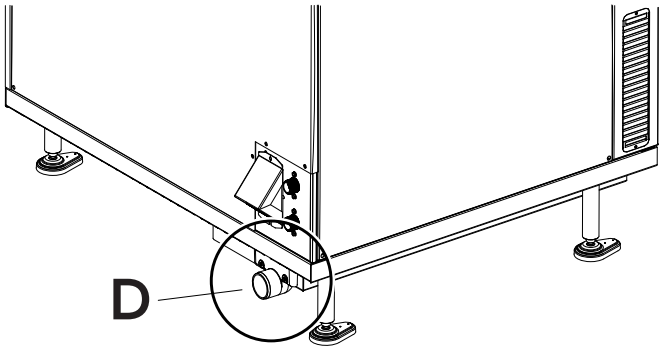

CAUTION
The connection of the appliance drain to the sewer shall be done in accordance with the current national and local regulations.

- The oven has an AIR-BREAK, anti-backflow device inside that allows to prevent any backflow from the drainage system entering the internal pipes and the oven compartment.

Therefore, to connect the draining system it is possible:

- to connect the drain pipe directly to the drainage system:

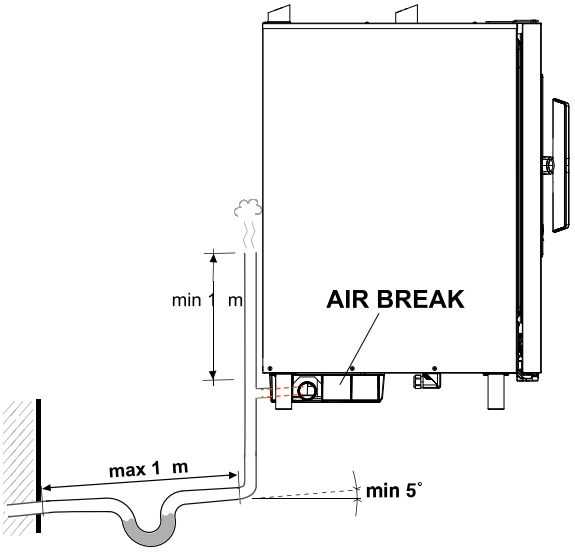

- or to let the drain pipe discharge into a floor grate.

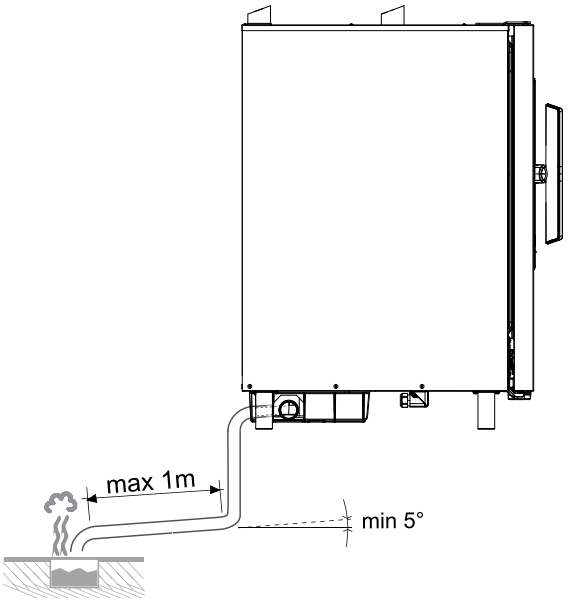

Additional configurations for tabletop models

- The drain pipe can be run to the side or the back, if the oven is not placed against a wall.

6 – 10 grids models

Special drain pipes kits are available on demand (code 922636 – 922637).

- **lateral drain:**

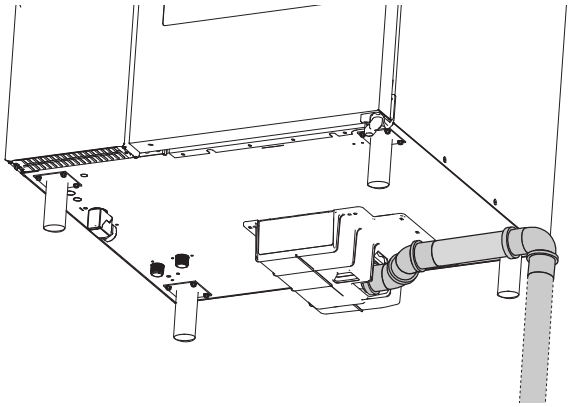

- **back side:**

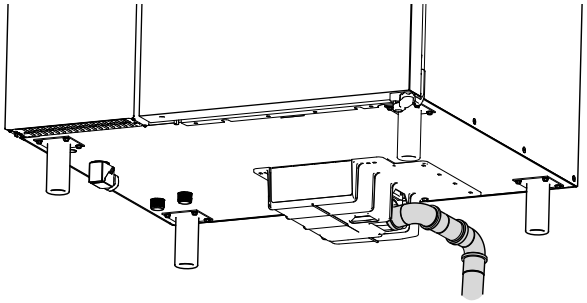

Make sure that:

- the drain pipe is not more than 1 metre long, with inside diameter not less than that of the oven discharge pipe (1″ 1/4).
- there are no constrictions in hoses or elbows in metal pipes, along the entire drain path.
- horizontal sections where water can collect and stagnate (minimum slope 5%) are avoided.

CAUTION
The appliance waste piping connection shall be in accordance with the International Plumbing Code or IAPMO Uniform Plumbing Code requirements.
Temperature of water discharged into the sewer system must not exceed 140°F / 60 °C. To comply with this requirement, connect the appliance drain with an approved cooling device.

G.5 Electrical connection

G.5.1 General precautions for electrical connection

IMPORTANT
The connection to the electrical power supply must be in compliance with the current national and local regulations.

Before connecting, make sure the voltage and frequency match that given on the dataplate.

- For appliance connection use only a metal or rigid plastic conduit without any sharp parts.
- A fused disconnect switch or main circuit breaker (customer provided) must be installed in the electric supply line for the appliance. It is recommended that this switch/circuit breaker have lockout/tagout capability.

  Install the switch in the building's electrical system, in the immediate vicinity of the appliance.
- The appliance must be electrically grounded in accordance with local codes, or in the absence of local codes, with the National Electrical Code, ANSI/NFPA 70, or the Canadian Electrical Code, CSA C22.2, as applicable. Make sure to connect the appliance to an efficient earthing system.

  For that purpose, the connection terminal block has a terminal with the symbol ⏚ for connecting the earth wire.
- Include also the appliance into an equipotential system. The equipotential wire must have a section of at least 8 AWG (10 mm^2).

  This connection is made with the setscrew marked ⏚, located externally near the power cable entry.

IMPORTANT
For 120v. gas versions, Electrolux Professional does not recommend the use of a GFCI outlet. If a GFCI outlet is required by code, a commercial GFCI with a rating of 20 mV must be used.

G.5.2 Power cable installation

Electric models

To connect the power cable to the appliance, proceed as follows:

1. Remove the left side panel of the oven;
2. Undo the screw fixing the external box under the oven (tabletop models) or on the rear panel (free standing models);
3. Remove the pre-cut whose dimensions match the selected conduit;

6 – 10 grids models

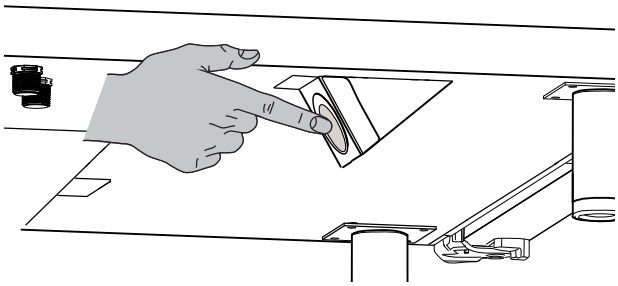

20 grids models

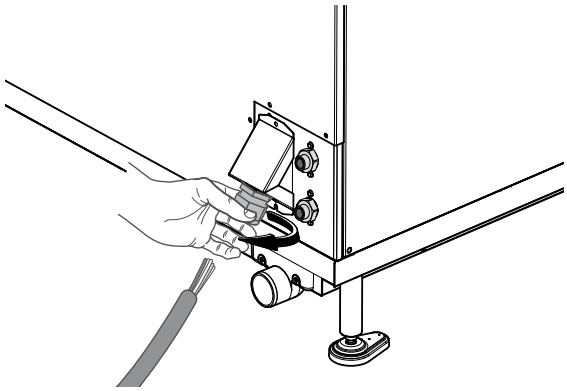

4. Bring field wiring leads inside the conduit;

5. Connect the conduit to the opening safely and reassemble the external box;
6. Run the wires toward the terminal block;
7. Connect the wires to the terminal block as shown in the following figure.

6 – 10 grids models

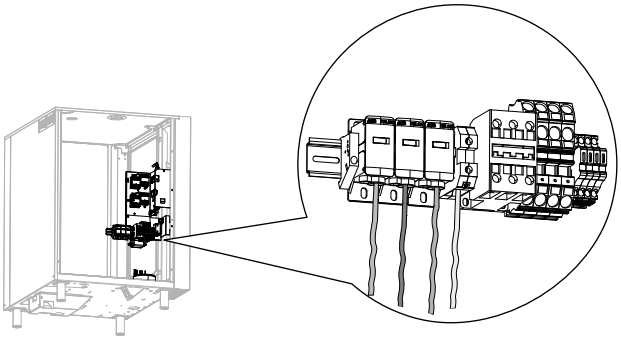

8. Refit the left side panel of the oven;

Gas models

To connect the power cable to the appliance, proceed as follows:

1. Remove the left side panel of the oven;
2. Loose the ring to let the power cable run through the cable clamp (see the figure);

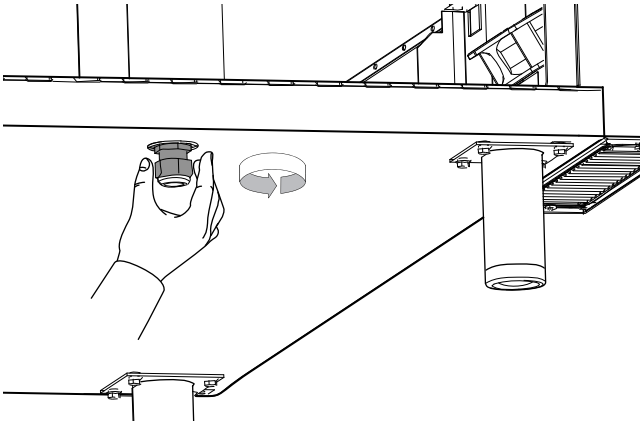

3. Run the cable toward the terminal block;
4. Unsheathe all wires from the cable;
5. Connect the wires to the terminal block as shown in the following figure.

6–10grids models

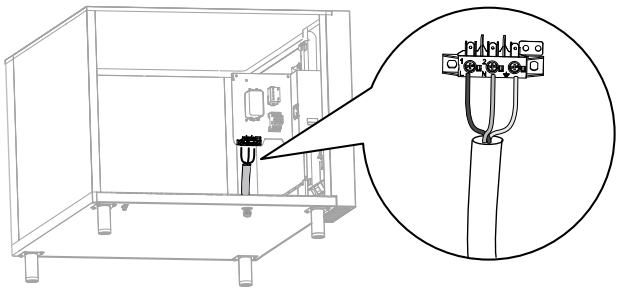

20grids models

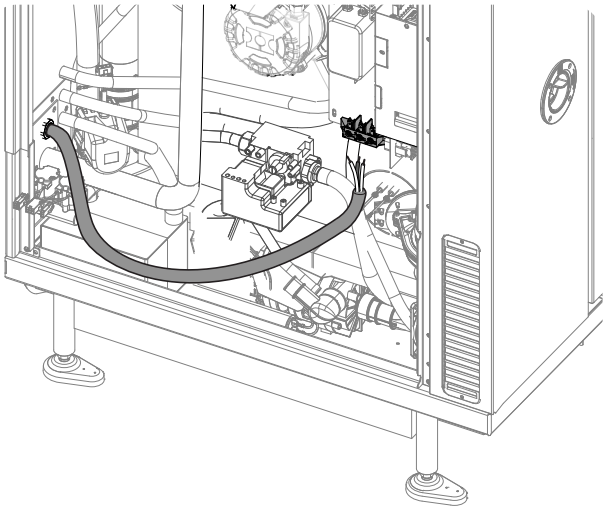

6. After connection secure the cable screwing the cable gland ring.

CAUTION
If the supply cord is damaged, it must be replaced by the manufacturer, its service agent or similarly qualified persons in order to avoid a hazard.

IMPORTANT
The manufacturer declines any liability if the current national and local regulations and possible safety regulations are not respected.

G.5.3 Electrified accessories installation

Disconnect the oven from the electrical supply before attempting the installation of the External Liquid Detergent Kit accessory.

This accessory is intended to be only used together with the COMBI ovens.

G.5.4 Safety device

The appliance is equipped with the following safety devices:

- Fuse - located behind the control panel.

For electrical models

- Cavity manual-reset safety thermostat - located behind the control panel;
  It switches off the electrical supply to the cavity heaters.
- Steam generator manual-reset safety thermostat - located behind the control panel;
  It switches off the electrical supply to the generator heaters.
- Automatic-reset thermal device inside the fan.
  It activates if the fan overheats, protecting unit operation and cuts off the electrical power to the appliance.

For gas models

- Cavity manual-reset safety thermostat - located behind the control panel;
  It shuts off the gas supply to the convector burner.
- Steam generator manual-reset safety thermostat - located behind the control panel;
  It shuts off the gas supply to the generator burner.
- Automatic-reset thermal device inside the fan.
  It activates if the fan overheats, protecting unit operation and cuts off the electrical power to the appliance.

NOTE!
Resetting operations must be carried out by specialised technical personnel after eliminating the causes of interruption.

G.6 Connectivity

G.6.1 Installation

If you have ordered one of the “Connectivity kits“ as accessory to make the appliance connectable, refer to the specific Installation instructions of the accessory.

If your appliance is equipped with IOT module, please refer to the Installation Instructions 595405V00 available through the appliance QR code.

G.7 Gas connection

G.7.1 General precautions for gas connection

CAUTION
Make sure the appliance is suitable for the type of gas available. Refer to the data plate. Observe all local gas company regulations! Connecting incorrectly may result in burns.

- Gas ovens are not suitable for marine environment.
- Before installing, consult the gas company to check the compatibility between the supply capacity and foreseen consumption.
- The combustion aeration capacity cannot be modified.

NOTE!
The connection of the inlet gas pipe is painted yellow.

Before connecting the appliance to the gas pipe

1. Remove the plastic protection cap from the gas pipe.
2. Connect the inlet gas pipe “G“ to the gas pipe.
3. Fit a rapid gas shutoff tap “H“ in an easily accessible place ahead of the appliance.

NOTE!
The appliance and its individual shutoff valve must be disconnected from the gas supply piping system during any pressure testing of that system at test pressures in excess of ½ psi (3.5 kPa).
The appliance must be isolated from the gas supply piping system by closing its individual manual shutoff valve during any pressure testing of the gas supply piping system at test pressures equal or less than ½ psi (3.5 kPa).

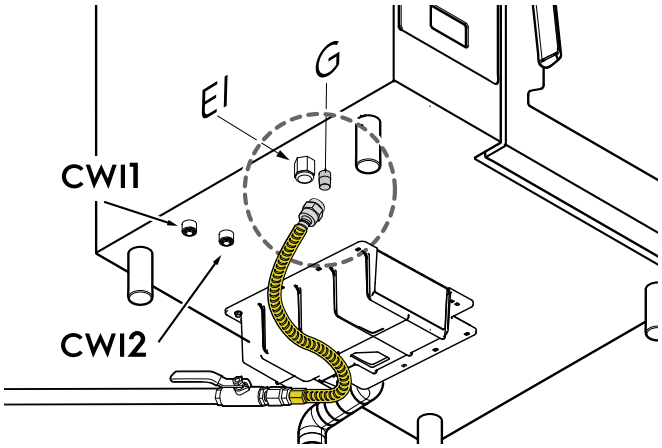

EI	Electrical inlet
CW1	Water inlet for cleaning system
CW2	Inlet for treated water
G	Inlet gas inlet pipe
H	Shutoff valve/tap

IMPORTANT
This appliance is arranged and tested to work on Natural Gas (refer to the E *TECHNICAL DATA* chapter);
To convert the appliance to another type of gas, refer to I *CONVERSION TO A DIFFERENT GAS TYPE* chapter.

G.7.2 Nominal heat output

Refer to the E *TECHNICAL DATA* chapter.

The nominal heat output is determined by the gas supply pressure and the diameter of the gas valve diaphragm (nozzle).

In case of new installations and/or conversion to a different gas type the appliance nominal heat output must always be checked by the authorised installer or by the gas company.

Any change to the nominal heat output is strictly prohibited.

G.7.3 Check the supply pressure

All standard appliances are prepared for **G20 natural gas** or **G31 liquid gas** configuration and are equipped with corresponding nozzles mounted. To see which gas configuration your appliance is prepared for, consult the gas adjustment label attached on the appliance itself.

IMPORTANT
The gas pressure in the oven must be considered a dynamic and not a static pressure, so it must be measured while the burner is lit and when all neighbouring appliances are lit.
If, for example, it is stated that the gas oven pressure must be 20mbar, this means 20mbar dynamic.

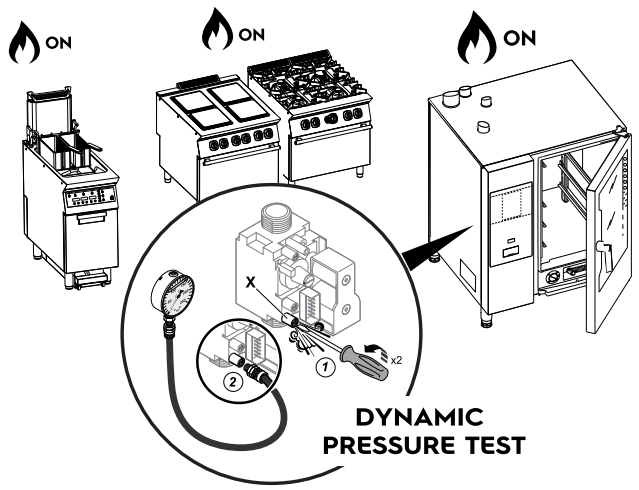

1. Remove the left hand side panel to gain access to the gas valve;
2. Loosen sealing screw “X“ from the gas valve pressure test point and connect the pressure gauge hose in its place;
3. Open the gas shut-off tap;
4. Start a mixed cooking cycle skipping the preheating phase in such a way that all the burners can be lit;
5. Check that the pressure reading is within the values given in the following table:

IMPORTANT
To see the values of pressures of all types of gas, refer to the table .

GAS TYPE PRESSURE for USA – Inches Water Column (kPa)

Type of gas	Normal	Min	Max
Natural gas	7.0 (1.74)	3.5 (0.87)	10.5 (2.61)
Propane	11.0 (2.74)	8.0 (1.99)	13.0 (3.23)

If the values are not within the values shown in the table, the appliance may not perform correctly. In this case inform your gas utility company of the problem.

6. Once you have measured the supply pressure stop the cooking cycle and close the gas shut-off tap.
7. Disconnect the pressure gauge and carefully refit and tighten sealing screw “X“;
8. Refit the previously removed side panel.

G.7.4 Burnt gas discharge

Observe instructions given in the currently valid versions of all local standards during installation.

CAUTION
Asphyxiation hazard!

It is necessary to prevent unacceptable concentrations of harmful combustion products (CO and CO2) within the installation room.

Exhaust gas and ventilation rates

Appliance size	6 Grids 1/1	6 Grids 2/1	10 Grids 1/1	10 Grids 2/1	20 Grids 1/1	20 Grids 2/1
Min. room ventilation rate [m³/h][1]	38	64	62	94	108	188
Min. combustion air supply [m³/h]	31	52	50	76	87	152

Exhaust gas and ventilation rates (cont'd.)

Appliance size	6 Grids 1/1	6 Grids 2/1	10 Grids 1/1	10 Grids 2/1	20 Grids 1/1	20 Grids 2/1
Max. exhaust gas volumes [m³/h]	71	121	126	192	218	413
Max. exhaust gas temperature [°C]	360	370	416	420	410	472

1. Air recirculation must take into account the air necessary for combustion (2 m³/h/kW of installed gas power).

NOTE!
According to the installed rated thermal load, some local safety regulations regarding ventilation may be applicable. Verify provisions requiring the installation in rooms equipped with air conditioning plants for intake and exhaust ventilation.

Before installing the discharge system:

Steam convection gas ovens shall be installed taking into account the discharge system options.

- refer to the diagrams illustrated here after:

1. **OPTION 1 (direct discharge under extractor hood without manifold)**
   The exhaust gases are driven out directed outside through kitchen ventilation systems.

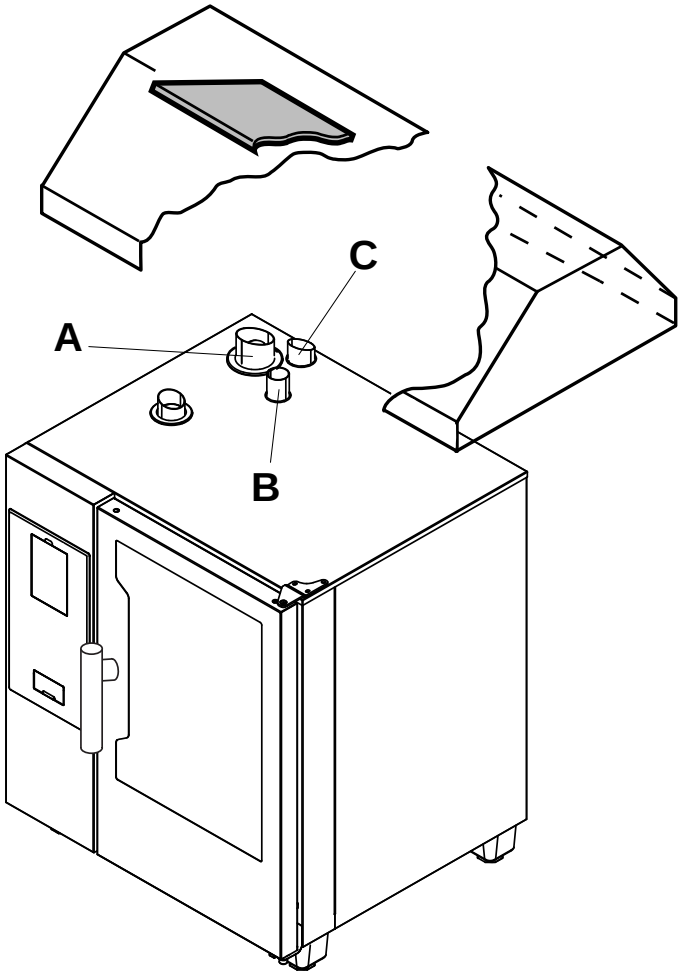

A	Exhausting gas from steam generator (gas models with boiler)
B	Exhaust gas cavity heat exchanger (all gas models)
C	Steam discharge (electric and gas models)

CAUTION
Make sure the ventilation system is able to discharge the quantity of exhaust gases made by the appliance.

2. **OPTION 2 (discharge under extractor hood with manifold)**

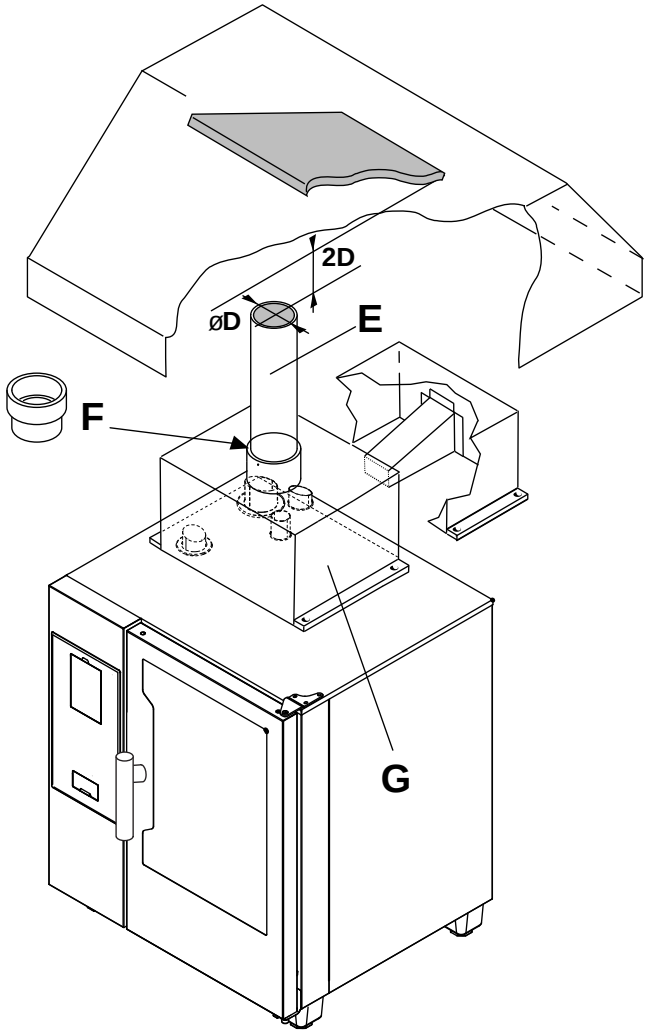

D	Extension pipe diameter
2D	Distance between extension pipe and extractor hood
E	Extension pipe (available on the market)
F	Adapter ring for extension pipe (available on the market)
G	Manifold (not included, to be ordered)

Indications

- The extension pipe “E“ and the adapter ring “F“ are not included. They are available on the market.
  The pipes must withstand 350 °C.
- When installing the manifold “G“, always keep the distance “2D“ between the top of the extension pipe and the lowest point of the hood filters.
  This distance “2D“ is defined on the basis of exhaust pipe diameter “D“.
- Apply silicone sealant between the contact surfaces.

IMPORTANT
Devices “E“, “F“ and “G“ are not intended for direct canalization of flue or vent gases to the outside atmosphere.

G.7.5 Instructions for the exhausting system

Before installation, check that the volume sucked by the fume exhaust system is greater than that of burnt gases produced by the appliance according to the reference standard.

CAUTION
Since burnt gases can reach very high temperatures, check the materials extension ducts and extractor hood filters are made from.

CAUTION
Make sure to periodically check the filters. If clogged with grease and grime, they will reduce the efficiency of the extraction system.

H FIRST START UP

H.1 Recap checks

Before first start up, make sure to carry out the following checks:

- voltage supply provided and voltage arrangement of appliance;
- correct phase/neutral connections into main connection clamp;
- gas type provided and gas arrangement of appliance;
- if the appliance nozzles have all been replaced as indicated (if necessary);
- gas pressure supply to oven;
- flushing of water pipes before connection to oven;
- water pressure supply and correct water treatment system connected to CWI1 and CWI2;
- correct closing of the door;
- empty cavity from all flammable material / pots /pans / utensils and so on (only 20GN models must have inserted in cavity the trolley for first startup);
- no flammable materials on top of oven;
- removing peeling stickers from side paneling.

I CONVERSION TO A DIFFERENT GAS TYPE

I.1 Warning

IMPORTANT
The conversion to a different type of gas the appliance is factory set for a specific gas type as specified on the stickers affixed to the packing and to the appliance. To convert the appliance to a different gas type, follow strictly the procedure below.

I.2 Replacement of the GAS VALVE nozzle

1. Unscrew the hex nut of connector “A“ with the relative seal “A1“;
2. Replace the nozzle “B“ with the specific component according to the gas type to be used for relative burner (cavity or boiler);

   Refer to I.4 *Nozzles and adjustments / gas types* for the model of oven in question;

   The nozzle diameter shown in hundredths of a millimetres is marked on the body of the nozzle (e.g. diameter 3.5 mm, marking: 350).
3. Fully tighten connecting hex nut “A1“ with the relative seal “A“.
4. Repeat the above operations for the other valves (if present).

Parameter adjustment

- Change the electronic card parameters relevant to the burner fan control as indicated in the service manual.

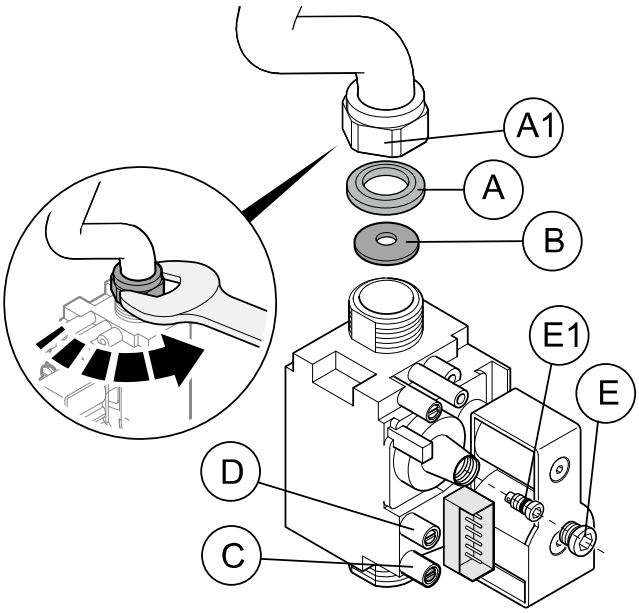

Figure 1

LEGENDA

A1	hex nut
A	seal
B	nozzle
C	sealing screw
D	sealing screw
E	screw cap
E1	gas valve screw

I.3 Gas valve adjustment (refer to Figure 1)

NOTE!
Note: the adjustments described below must be performed **exclusively by a technician authorised by the manufacturer.**

To adjust the pressure (negative) of the gas valve, adapting it to a different type of gas with respect to the factory set type, proceed as follows:

1. Loosen the sealing screw “D“ in the gas valve pressure test point;
2. Connect a pressure gauge with minimum resolution of 1 Pa;
3. Remove adjuster screw cap “E“;
4. Light the burner and select on the control panel a CONVECTION cooking cycle for the convector and a STEAM cycle for the boiler;
5. 1 minute after lighting the burner use a suitable tool to adjust screw “E1“ of the gas valve to regulate the pressure (negative) until the pressure gauge reading is aligned with the value shown in I.4 *Nozzles and adjustments / gas types* corresponding to the burner in question;
6. Wait for a few minutes and (if the value changes) and adjust screw “E1“ again;
7. When the adjustment is concluded refit cap “E“ and seal it with red paint, taking care not to clog the vent holes in the valve;
8. Turn off the burner;
9. Repeat the above procedure for the other valves (if present).

I.3.1 Appliance gas type sticker

After setting up the appliance for a different type of gas, use the sticker relative to the type of gas to be used and affix it to the outside of the oven in a clearly visible position.

Choose the required sticker from those available in the supplied pouch.

I.4 Nozzles and adjustments / gas types

CAVITY gas valve (USA only)

gas valve	6GN 1/1		10GN 1/1			20GN 1/1		
	⌀ nozzle	Adjustment gas valve (Pa)[1]	⌀ plate[2]	⌀ nozzle	Adjustment gas valve (Pa)[1]	⌀ plate[2]	⌀ nozzle	Adjustment gas valve (Pa)[1]
Natural Gas / G20	4,70	0	22	4,85	-0,10	22	4,85	-0,10
L.P.G. / G31	4,05	0 / -0,05	21	3,95	0	21	3,95	0

1. Negative pressure
2. The plate must be changed

BOILER gas valve (USA only)

gas valve	6GN 1/1		10GN 1/1		20GN 1/1	
	⌀ nozzle	Adjustment gas valve (Pa)	⌀ nozzle	Adjustment gas valve (Pa)	⌀ nozzle	Adjustment gas valve (Pa)
Natural Gas / G20	4,70	-0,05	6,05	0	6,30	-0,05
L.P.G. / G31	3,95	0	5,15	0	5,20	-0,1

1. Negative pressure

CAVITY gas valve (USA only)

gas valve	6GN 2/1		10GN 2/1		20GN 2/1	
	⌀ nozzle	Adjustment gas valve (Pa)	⌀ nozzle	Adjustment gas valve (Pa)	⌀ nozzle	Adjustment gas valve (Pa)
Natural Gas / G20	5,50	0	6,60	-0,05	6,60	-0,05
L.P.G. / G31	4,60	-0,05	5,50	-0,1	5,50	-0,1

1. Negative pressure

BOILER gas valve (USA only)

gas valve	6GN 2/1		10GN 2/1		20GN 2/1	
	⌀ nozzle	Adjustment gas valve (Pa)	⌀ nozzle	Adjustment gas valve (Pa)	⌀ nozzle	Adjustment gas valve (Pa)
Natural Gas / G20	5,45	-0,1	6,30	-0,05	7,90	0
L.P.G. / G31	4,60	-0,05	5,20	-0,1	6,15	0

1. Negative pressure

I.5 How to replace the plate (burner reducer) in US models

The burner reducer must be replaced for gas G31 L.P.G. only in some models as specified in the table above.

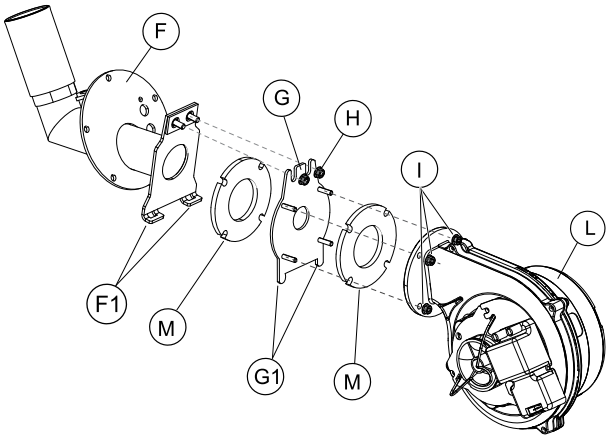

Legenda

F	Burner
G	Plate
H	2 Nuts
I	4 Nuts
L	Blower
M	Gasket
G1	Pin
F1	Slot

The diameter of the middle hole of the reducer is given in mm.

1. Unscrew the 2 nuts “H“ fixing the plate “G“ to the burner “F“;
2. Unscrew the 4 nuts “I“ that fix the plate “G“ to the blower “L“;
3. Replace the plate “G“ (including the 2 gaskets “M“) with the plate for gas G30 or G31 L.P.G;
4. Retighten 4 nuts “I“ that fix the plate “G“ to the blower “L“;
5. Insert the 2 pins “G1“ of plate “L“ in the 2 slots “F1“;
6. Retighten the 2 nuts “H“ previously removed with the corresponding washers (if present).

J APPLIANCE SET UP

J.1 Introduction

CAUTION
Make sure the appliance is connected to the water supply, the draining system, the power supply and, in case of gas model, to the gas supply and to a exhaust burnt gas system.

CAUTION
Check the correct working of the door closing mechanism when the oven is hot. It may be requested to adjust the position of the door catch.

J.1.1 Touch models

When you start your new appliance for the first time, you are prompted for an automatic set-up procedure, called Wizard, once.

The appliance checks if all the installation steps have been carried out correctly and performs a series of auto tests. The Wizard lasts about ca. 30 minutes.

This procedure must be completed to guarantee the oven performances and to allow its use. Refer to the Service Manual – Electronic board.

IMPORTANT
This setup is meant to be carried out ONLY by an **authorized technician**.

DANGER
Risk of fire! Before running the wizard remove all packaging and any items from the cavity.

CAUTION
During operation, pay attention to the hot areas of the exterior surface.
Do not place objects on the outlets located at the back top of the appliance.

J.1.2 Digital models

When the oven is installed it is necessary to verify its correct functionality by carrying out a series of cycles with the following sequence:

boiler models

1. a cleaning cycle to check the hydraulic system sealing;
2. a steam cooking cycle to check the door gasket sealing;
3. a convection cooking cycle to check the temperature achievement of 250 °C in the cavity.

boilerless models

1. a cleaning cycle to check the hydraulic system sealing;
2. a convection cooking cycle to check the temperature achievement of 250 °C in the cavity.

NOTE!
For detailed information about the above procedures consult the corresponding Service Manual.

K MACHINE DISPOSAL

WARNING
Refer to "*WARNING and Safety Information*".

K.1 Procedure regarding appliance disposal

At the end of the product's life-cycle, make sure it is not dispersed in the environment. Different regulations are in force in the various countries, therefore comply with the provisions of the laws and competent bodies in the country where appliance disposal takes place.

The appliance's parts must be disposed of in a differentiated way, according to their different characteristics (e. g. metals, oils, greases, plastic, rubber, etc.).

Before disposing of the appliance, make sure to carefully check its physical condition, and in particular any parts of the structure that can give or break during dismantling.

Depending on the model, the doors must be removed before dismantling the appliance.

NOTE!
When dismantling the appliance, any marking, this manual and other documents concerning the appliance must be destroyed.

Electrolux Professional SPA
Viale Treviso 15
33170 Pordenone
www.electroluxprofessional.com