Dryer tunnel

Medium 22″ - Large 35″ - Corner 90°

EN Installation manual *

*Original instructions

59566R604- 2026.10

Installation diagram

22″

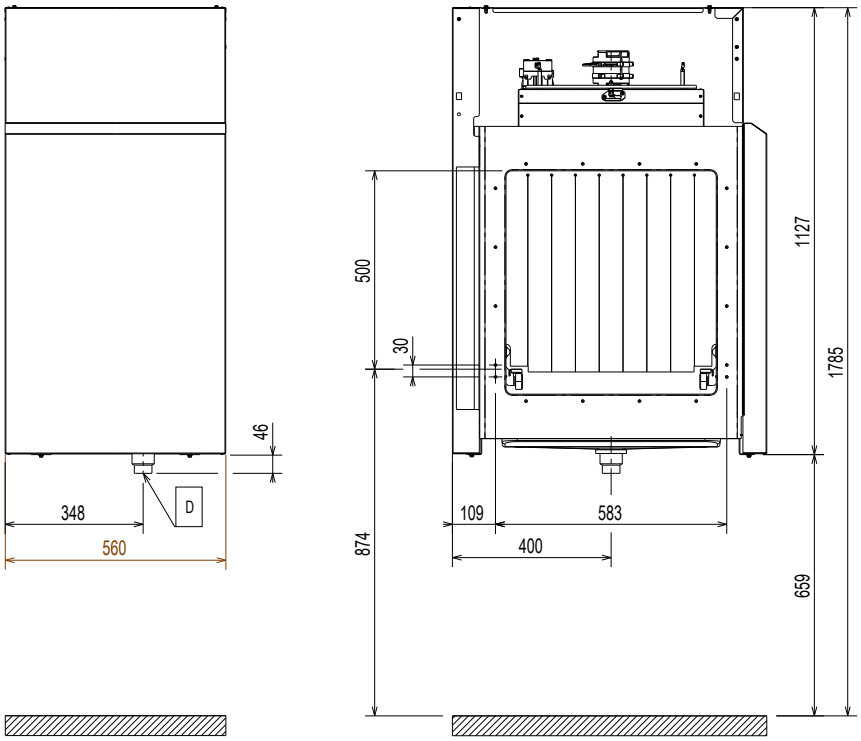

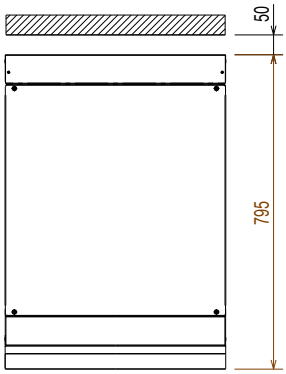

Installation diagram

35″

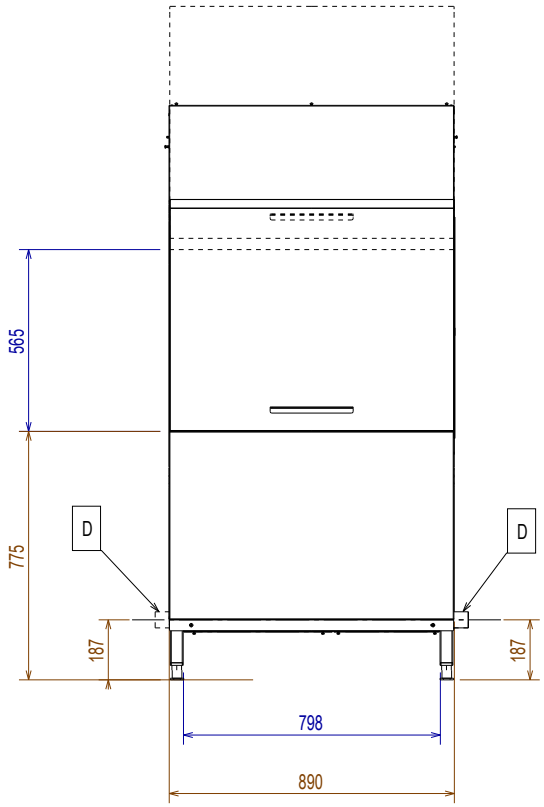

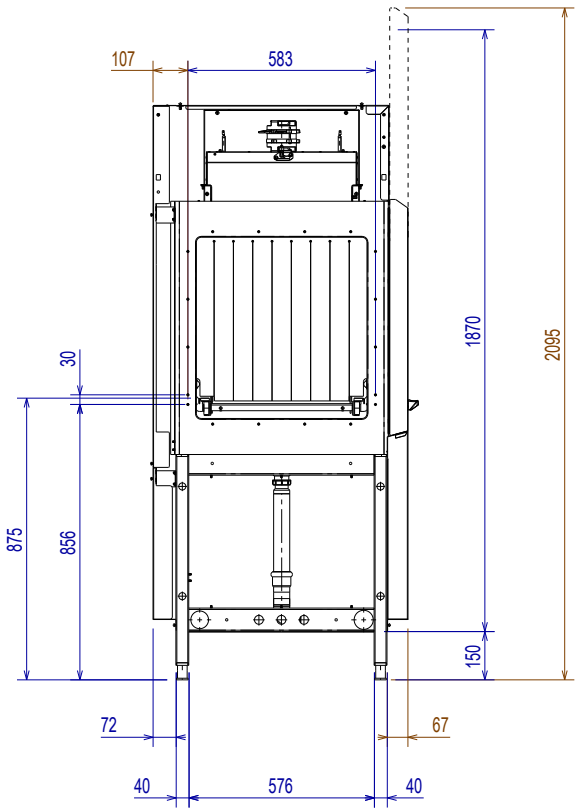

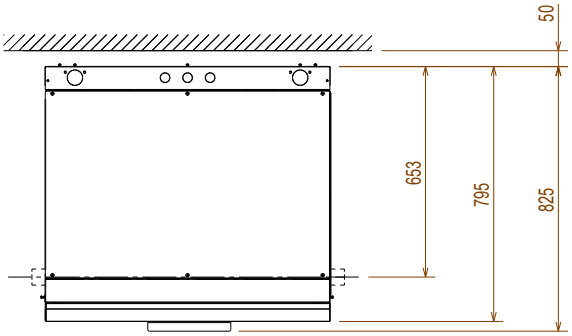

Installation diagram

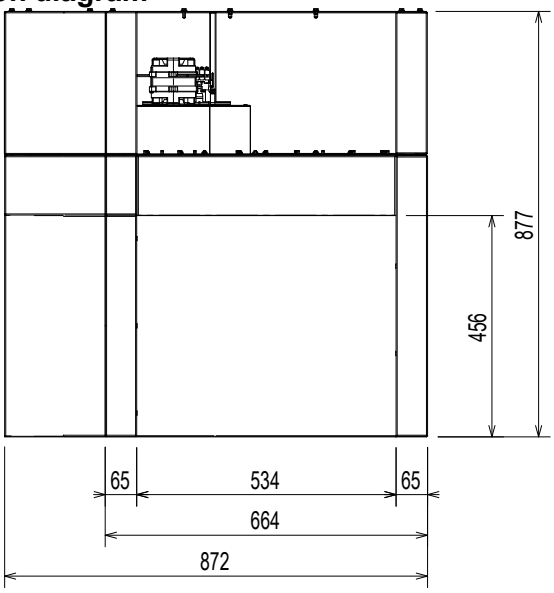

90°

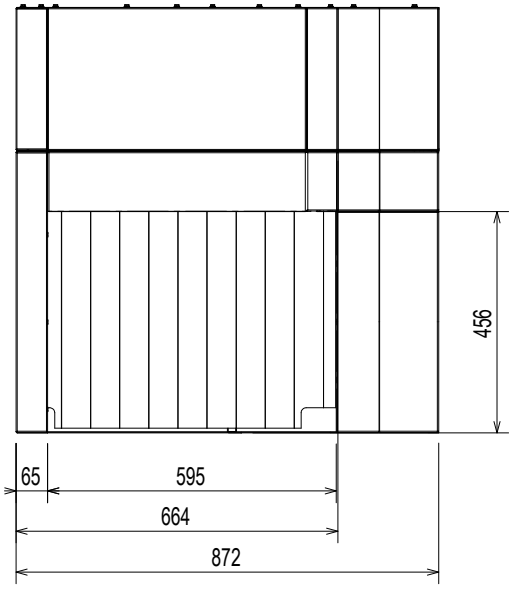

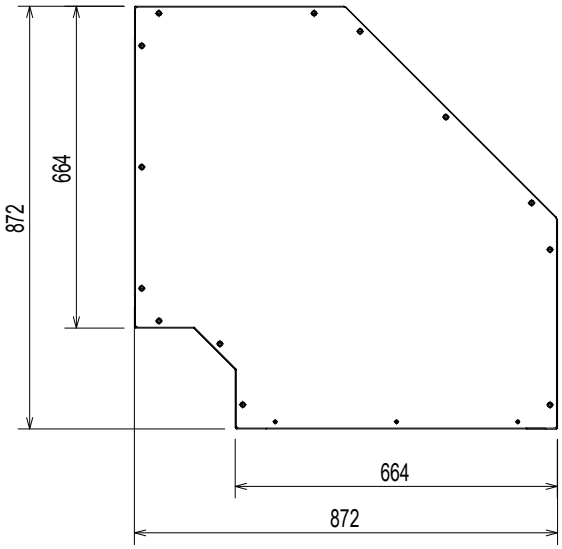

Drilling diagrams

90° Bend Right (counterclockwise)

Electrolux Professional rack handling system

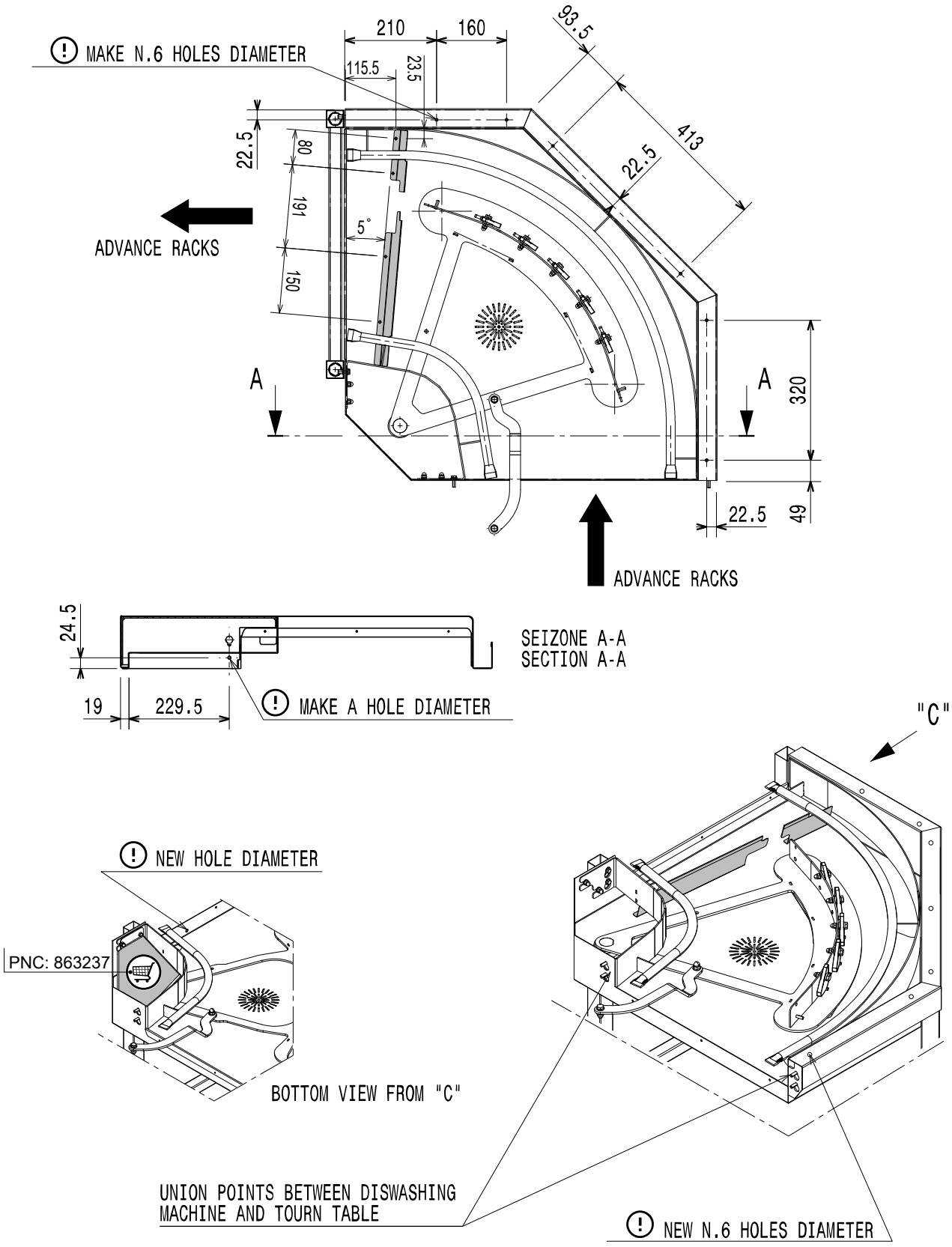

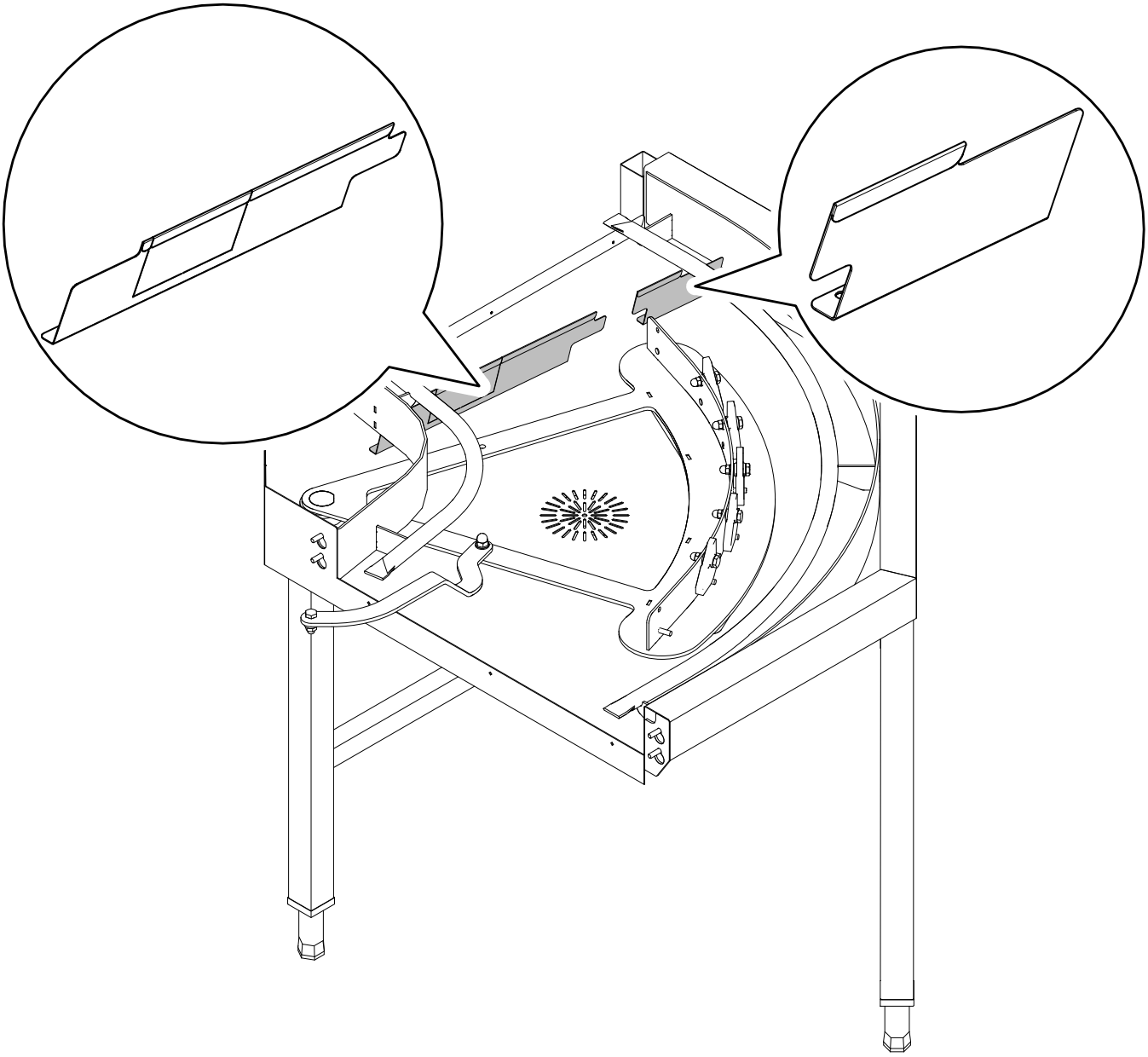

Drilling diagrams

90° Bend Left (clockwise)

Electrolux Professional rack handling system

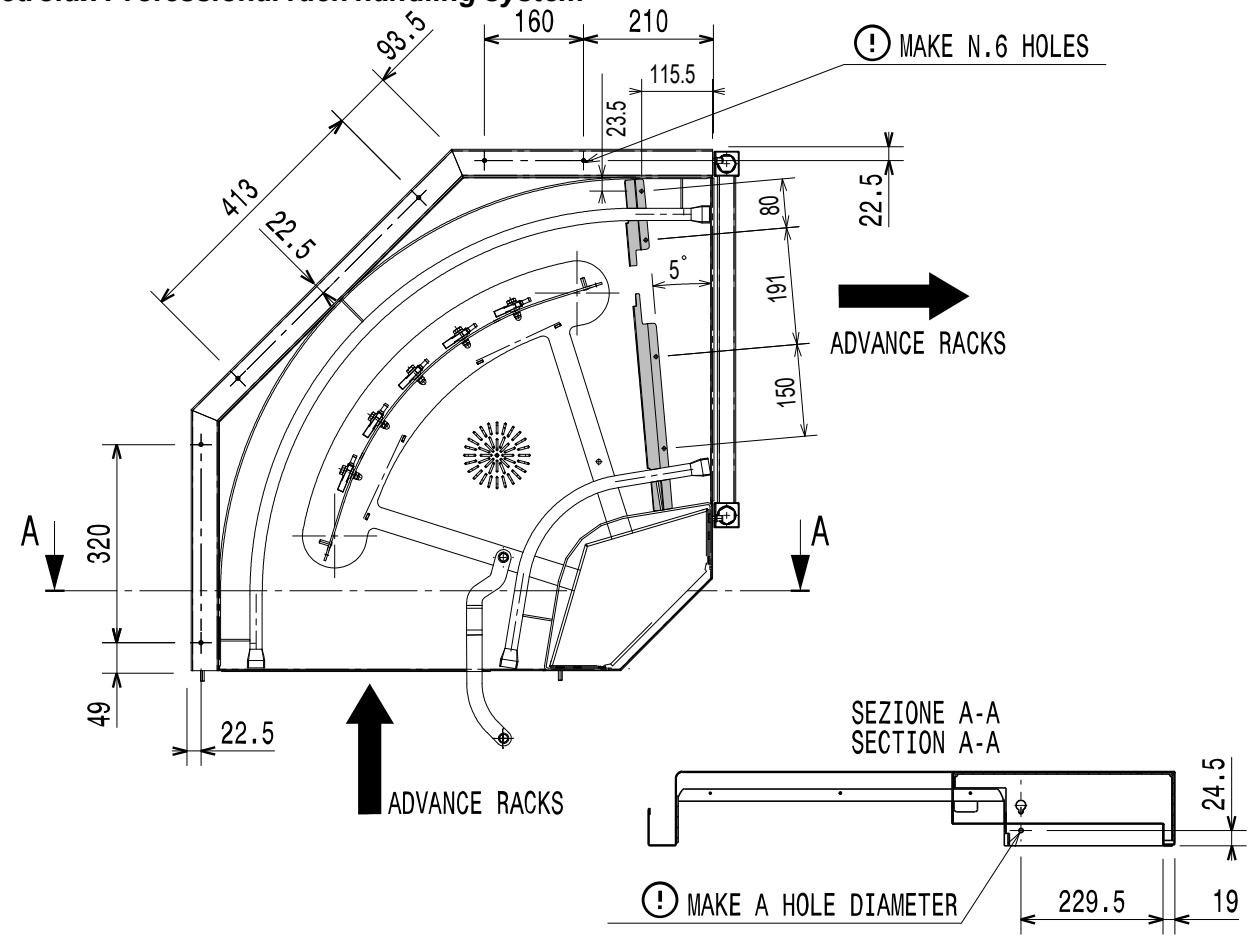

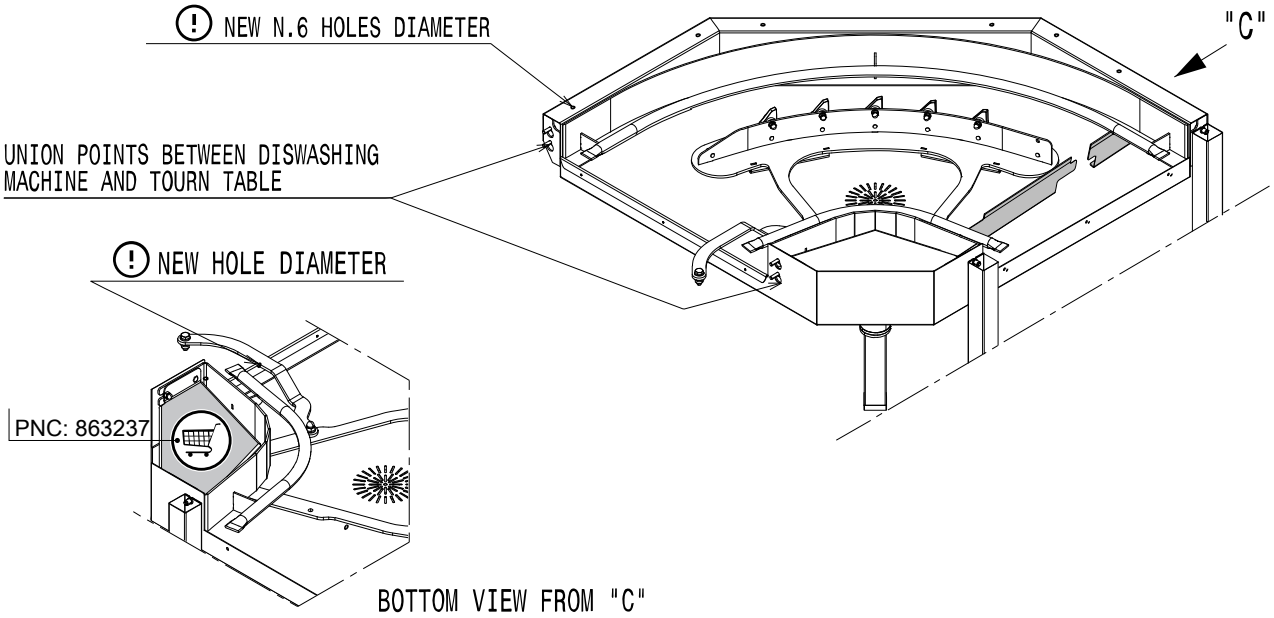

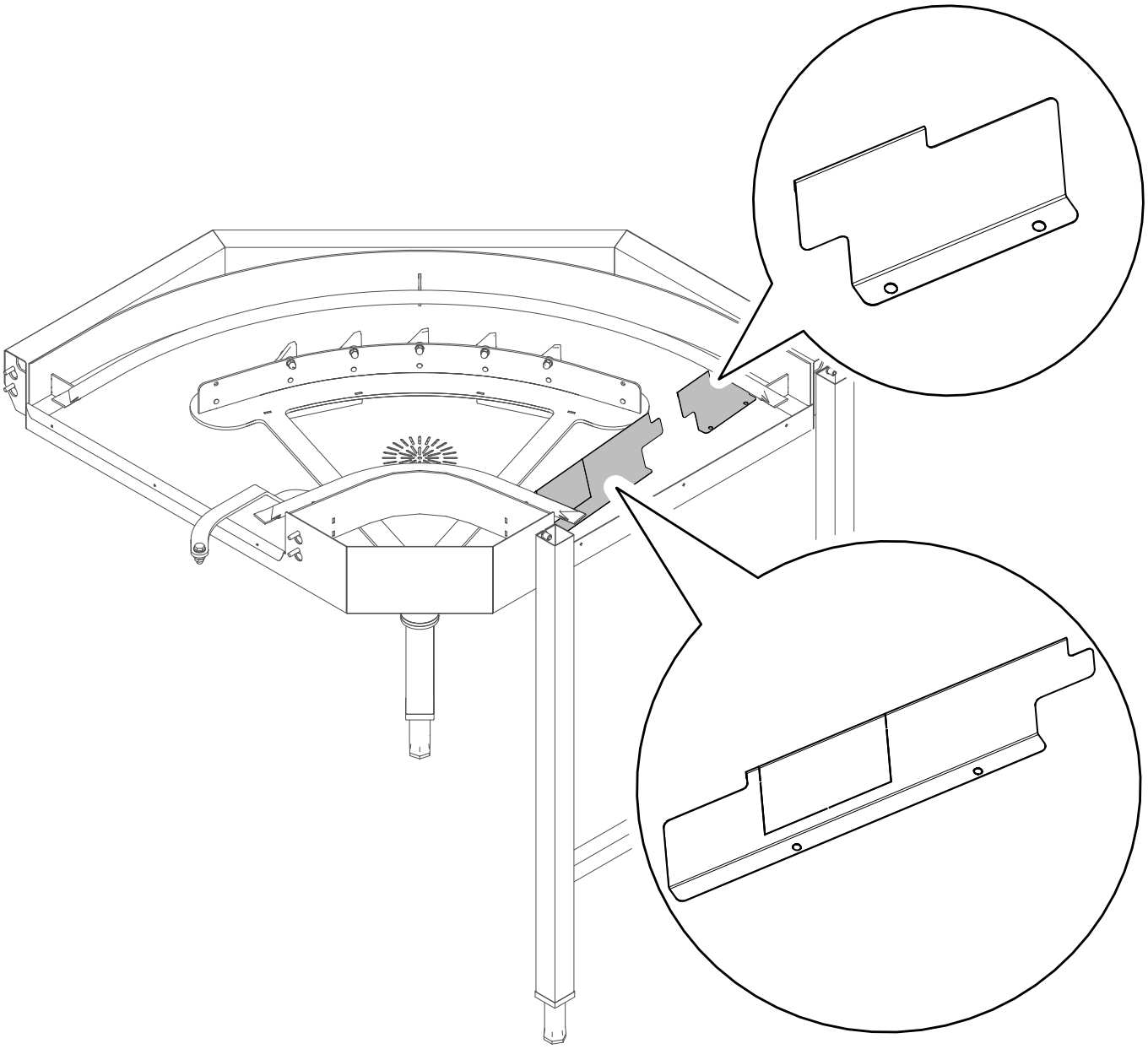

Drilling diagrams

180° Bend Right (counterclockwise)

Electrolux Professional rack handling system

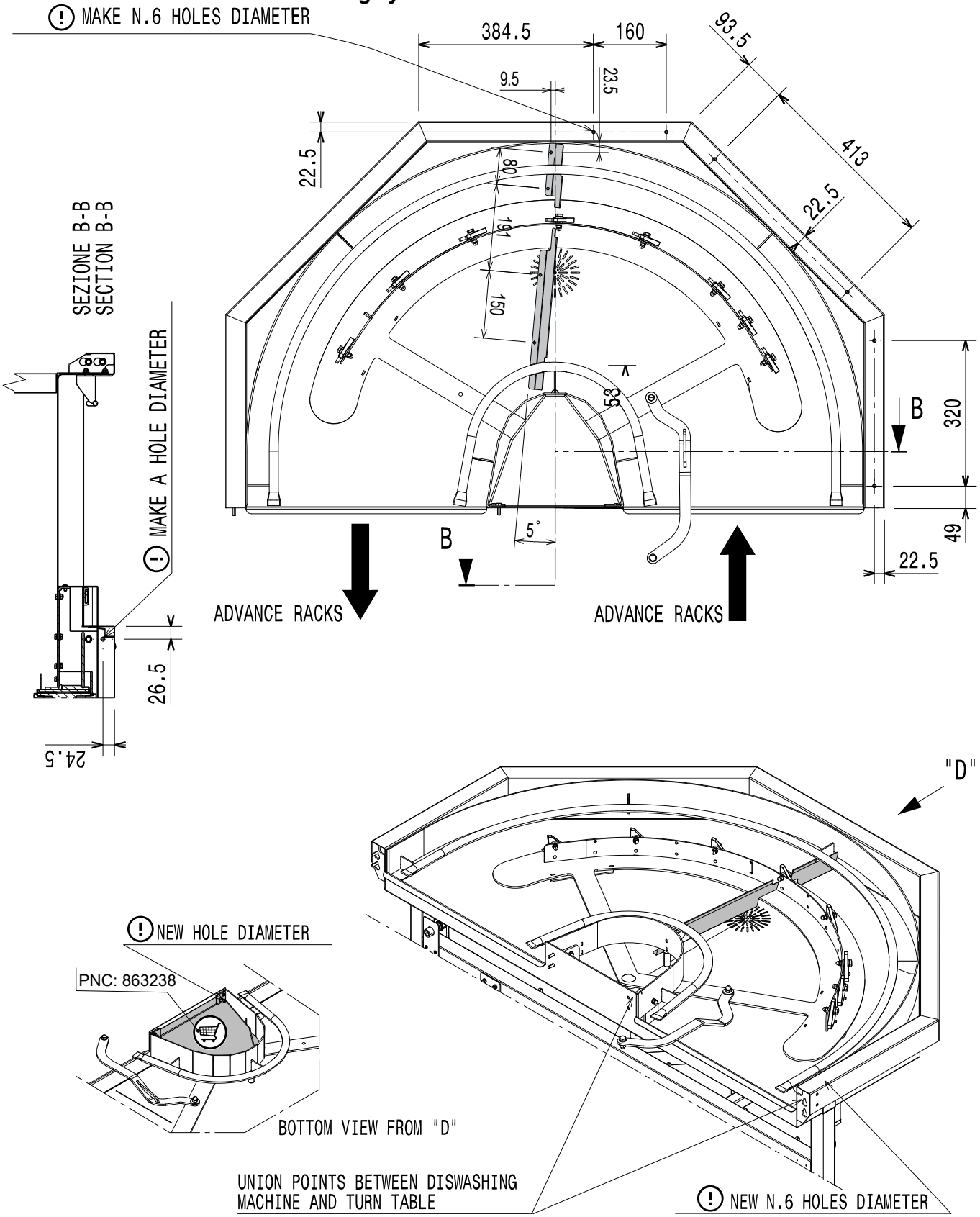

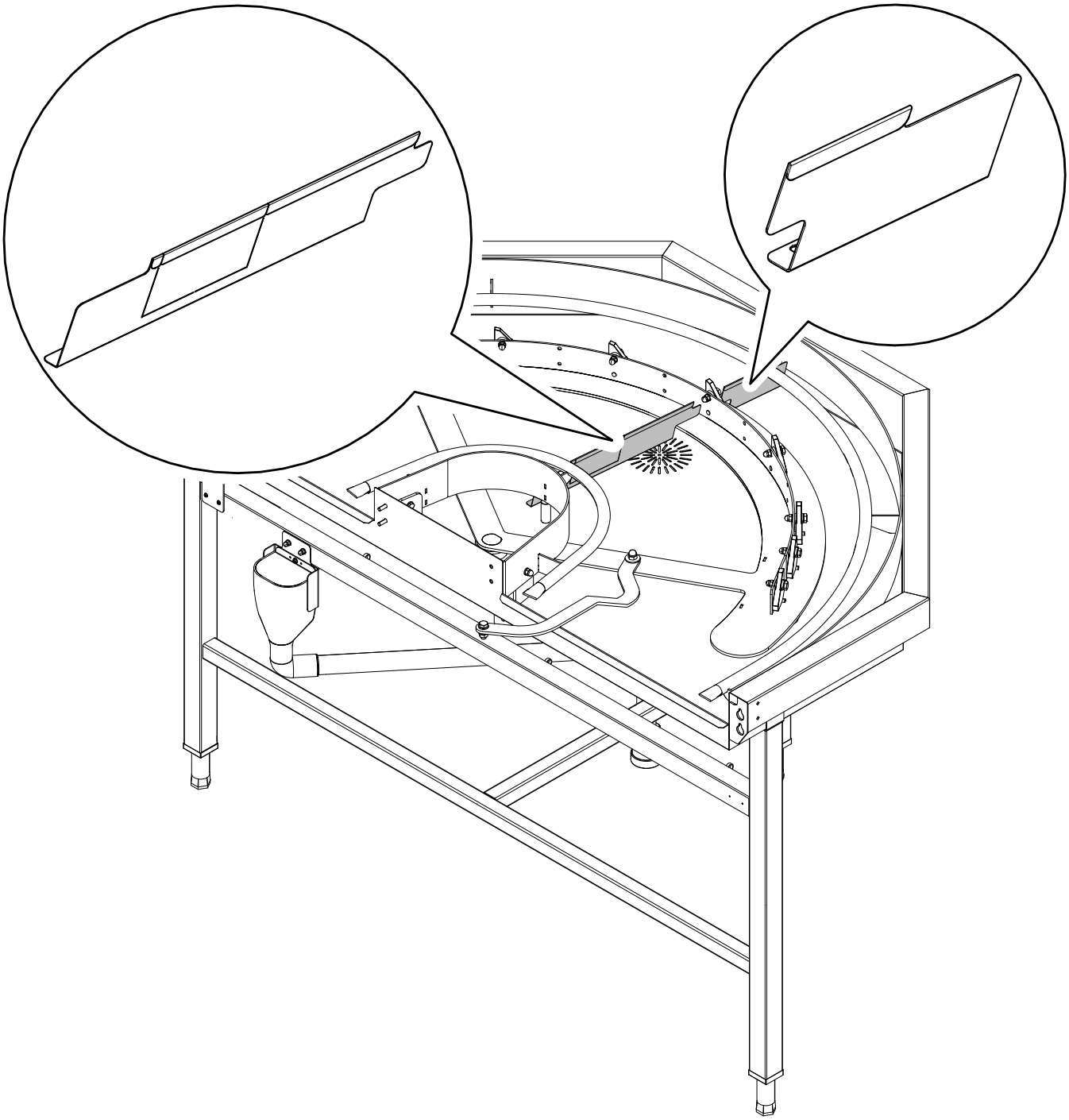

Drilling diagrams

180° Bend Left (clockwise)

Electrolux Professional rack handling system

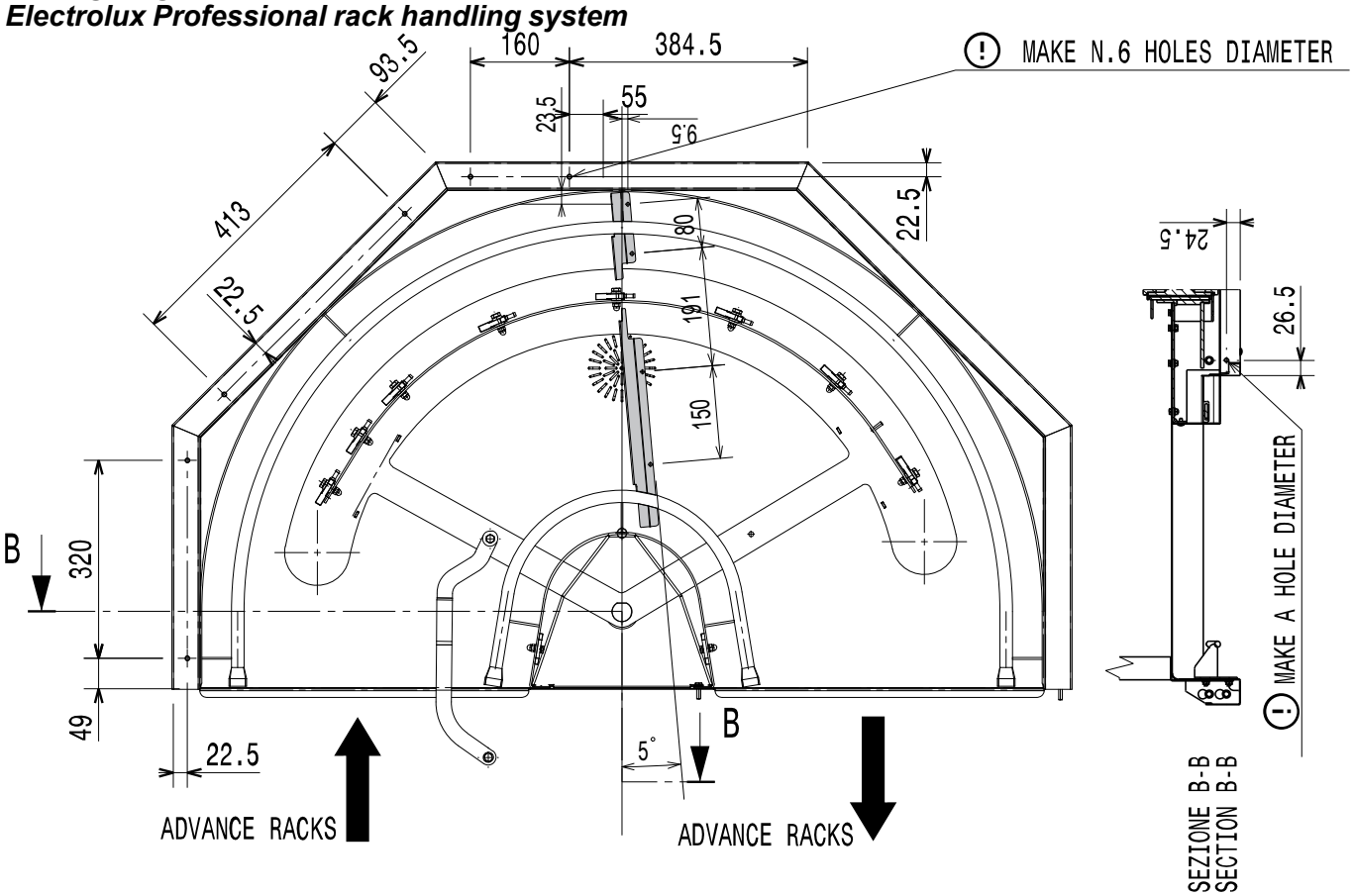

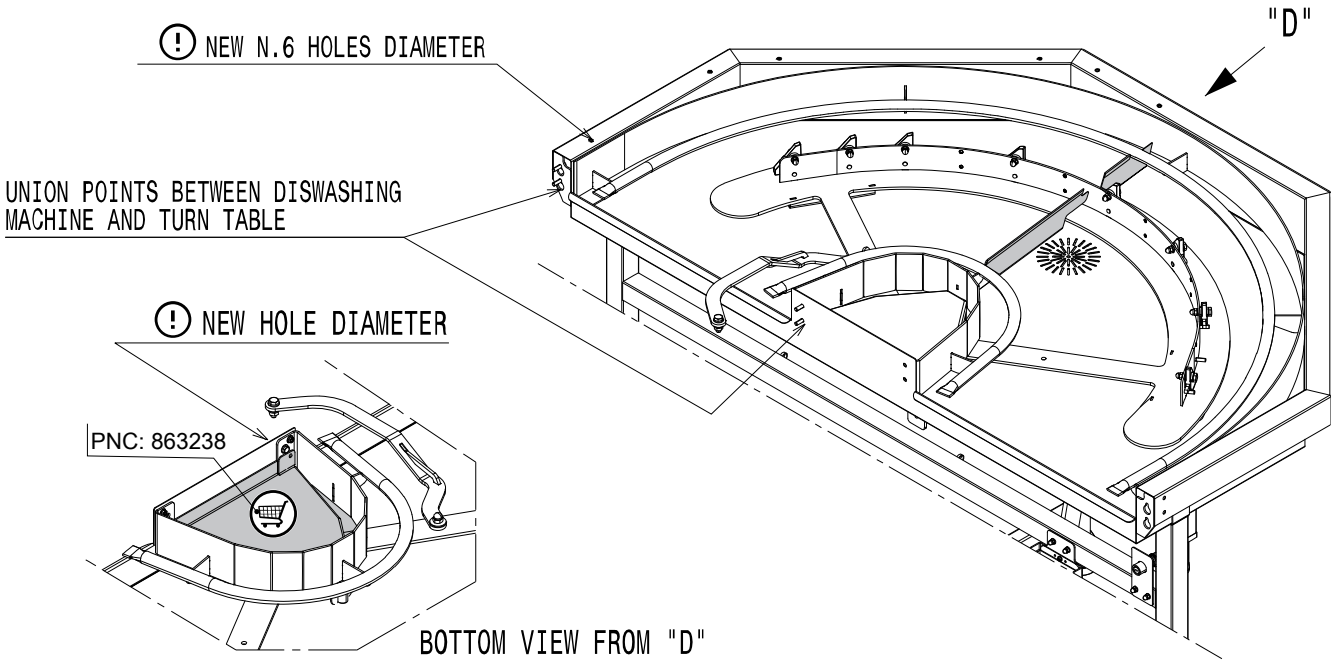

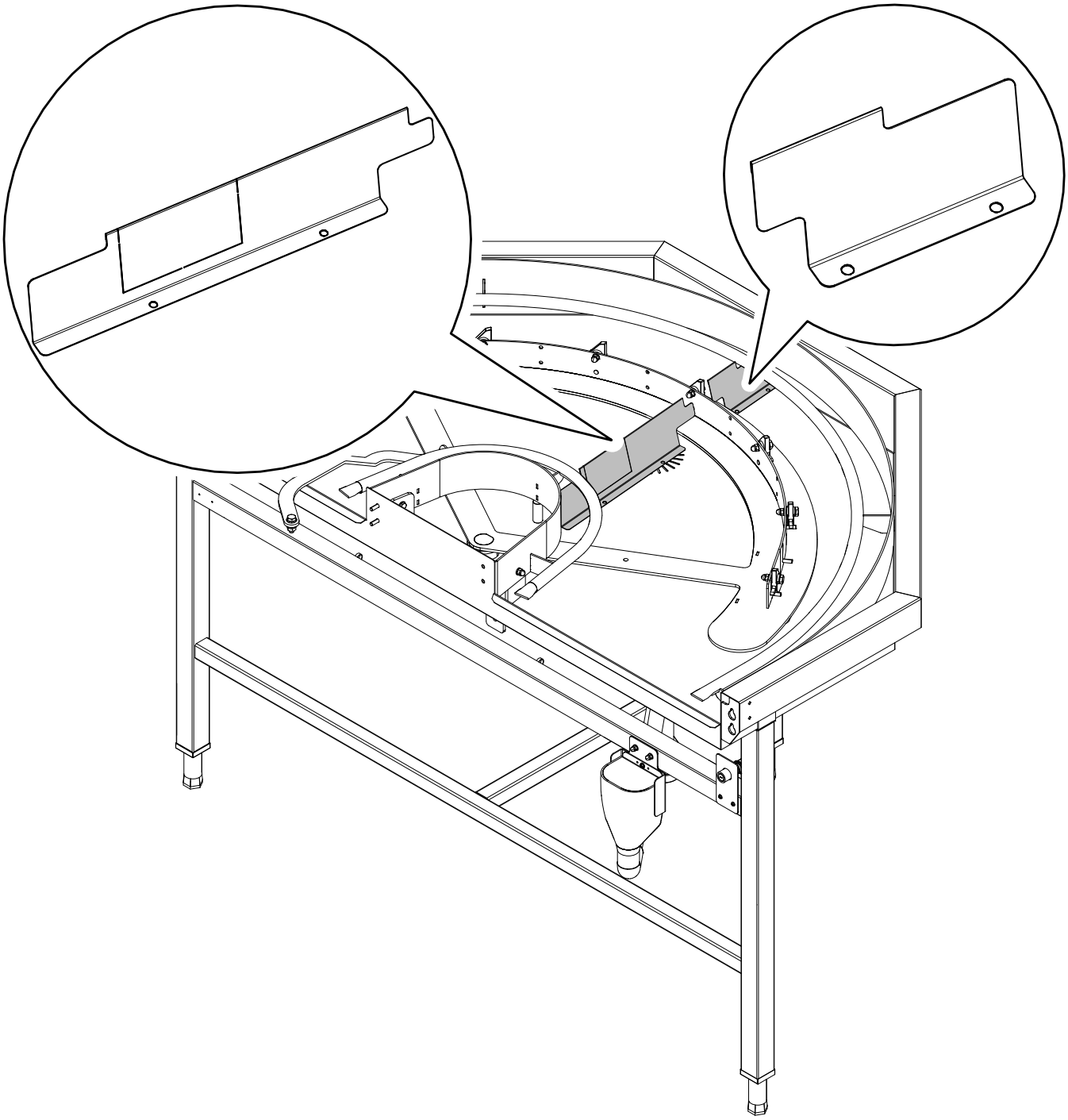

D = Drain outlet ⌀= G 1 1/2″ [50 mm]

Foreword

Read the following instructions, including the warranty terms before installing and using the appliance.

Visit our website www.electroluxprofessional.com and open the Support section to:

Register your product

Get hints & tips of your product, service and repair information

The installation, use and maintenance manual (hereinafter Manual) provides the user with information necessary for correct and safe use of the appliance.

The following must not be considered a long and exacting list of warnings, but rather a set of instructions suitable for improving appliance performance in every respect and, above all, preventing injury to persons and animals and damage to property due to improper operating procedures.

All persons involved in appliance transport, installation, commissioning, use and maintenance, repair and disassembly must consult and carefully read this manual before carrying out the various operations, in order to avoid wrong and improper actions that could compromise the appliance's integrity or endanger people. Make sure to periodically inform the user regarding the safety regulations. It is also important to instruct and update personnel authorised to operate on the appliance, regarding its use and maintenance.

The manual must be available to operators and carefully kept in the place where the appliance is used, so that it is always at hand for consultation in case of doubts or whenever required.

If, after reading this manual, there are still doubts regarding appliance use, do not hesitate to contact the Manufacturer or the authorised Service Centre to receive prompt and precise assistance for better operation and maximum efficiency of the appliance. During all stages of appliance use, always respect the current regulations on safety, work hygiene and environmental protection. It is the user's responsibility to make sure the appliance is started and operated only in optimum conditions of safety for people, animals and property.

IMPORTANT

- The manufacturer declines any liability for operations carried out on the appliance without respecting the instructions given in this manual.
- The manufacturer reserves the right to modify the appliances presented in this publication without notice.
- No part of this manual may be reproduced.
- This manual is available in digital format by:
  - contacting the dealer or reference customer care;
  - downloading the latest and up to date manual on the web site www.electroluxprofessional.com;
- The manual must always be kept in an easily accessed place near the appliance. Appliance operators and maintenance personnel must be able to easily find and consult it at any time.

Contents

A SAFETY INFORMATION 16
A.1 General information 16
A.2 General safety 16
A.3 Personal protection equipment 17
A.4 Transport, handling and storage 17
A.5 Installation and assembly 18
A.6 Electrical connection 18
A.7 Service 19
A.8 Disposal of packing 19
A.9 Machine disposal 19
B GENERAL INFORMATION 19
B.1 Introduction 19
B.2 Definitions 19
B.3 Appliance and manufacturer's identification data 20
B.4 Additional indications 20
B.4.1 How to interpret the factory description 20
B.5 Type reference 20
B.6 Responsibility 21
B.7 Copyright 21
B.8 Keeping the manual 21
B.9 Recipients of the manual 21
B.10 Coupling to the rack-type dishwasher 21
C TECHNICAL DATA 21
C.1 Main technical characteristics 21
C.2 Characteristics of power supply 22
D TRANSPORT, HANDLING AND STORAGE 22
D.1 Introduction 22
D.2 Handling 22
D.2.1 Procedures for handling operations 22
D.2.2 Shifting 22
D.2.3 Placing the load 22
D.3 Storage 22
D.4 Customer packaging checks 22
E INSTALLATION AND ASSEMBLY 22
E.1 Introduction 22
E.2 Customer responsibilities 23
E.3 Installation of dryer module on the rack-type dishwasher 23
E.4 Characteristics of the place of machine installation 23
E.5 Appliance space limits 23
E.6 Positioning 23
E.7 Extraction hood 23
E.8 Disposal of packing 24
E.9 Mechanical connections 24
E.10 Additional instructions for models with energy saving device 24
E.10.1 Right to left dishwasher 25
E.10.2 Left to right dishwasher 25
E.11 Drying tunnel 22″ 25
E.12 Drying tunnel 35″ 28
E.13 Drying tunnel corner 90° 30
E.13.1 Mechanical connection 30
E.13.2 Drilling diagrams for Electrolux Professional rack handling system 32
E.14 Electrical connection 32
E.14.1 Dryer with door: connect door signal and remove the jumper from terminal board 33
E.15 Plumbing connections 33
E.16 Parameter configuration update 33
E.17 Installation wizard 33
E.18 Constructional modifications 33
E.19 Positioning of emergency switches 33
E.19.1 Electrical connection 34
E.20 Emergency stop reinstatement 34
E.21 Fitting curtains 34
F COMMISSIONING 35
F.1 Preliminary checks, adjustments and operational tests 35
F.2 Electrical and plumbing connection 35
F.3 Positioning and fitting of the curtains 35
F.4 First starting 35
G NORMAL USE 36
G.1 For additional information, refer to manual supplied with the appliance 36

A SAFETY INFORMATION

A.1 General information

These appliance is intended to be used for commercial applications, for example in kitchens of restaurant, canteens, hospitals. It must be used for washing or drying (depending on the model) plates, dishes, glassware, cutlery and similar articles.

To ensure safe use of the appliance and a proper understanding of the manual it is necessary to be familiar with the terms and typographical conventions used in the documentation. The following symbols are used in the manual to indicate and identify the various types of hazards:

WARNING
Danger for the health and safety of operators.

WARNING
Danger of electrocution - dangerous voltage.

CAUTION
Risk of damage to the appliance or the product.

IMPORTANT
Important instructions or information on the product

Equipotentiality

Read the instructions before using the appliance

Clarifications and explanations

A.2 General safety

- The machine must not be used by people (including children) with limited physical, sensory or mental abilities or without experience and knowledge of it, unless instructed in its use and supervised by those responsible for their safety.
  - Do not let children play with the machine.
  - Keep all packaging and detergents away from children.
  - Cleaning and user maintenance shall not be made by children without supervision.
- This appliance can be used by children aged from 8 years and above and persons with reduced physical, sensory or mental capabilities or lack of experience and knowledge if they have been given supervision or instruction concerning use of the appliance in a safe way and understand the hazards involved.
- For suitable personal protection equipment, refer to chapter “A.3 *Personal protection equipment*“.
- Several illustrations in the manual show the machine, or parts of it, without guards or with guards removed. This is purely for explanatory purposes. Do not install the machine without the guards or with the protection devices deactivated.
- Do not remove, tamper with or make illegible the safety, danger and instruction signs and labels on the machine.
- Do not remove or tamper with the machine’s safety devices.

- Before carrying out any machine installation, always consult the installation manual, which gives the correct procedures and contains important information on safety.
- Unauthorized personnel must not enter the work area.
- Remove any flammable products or items from the work area.
- Machine positioning, installation and disassembly must be carried out by the specialised personnel in conformity with the current safety regulations, regarding the equipment used and the operating procedures.

A.3 Personal protection equipment

Summary table of the Personal Protection Equipment (PPE) to be used during the various stages of the appliance's service life.

Stage	Protective garments	Safety footwear	Gloves	Glasses	Safety helmet
Transport	—	●	○	—	○
Handling	●	●	○	—	—
Unpacking	○	●	○		—
Installation	○	●	●[1]	—	—
Normal use	●	●	●[2]	○	—
Adjustments	○	●	—	—	—
Routine cleaning	○	●	●[1–3]	○	—
Extraordinary cleaning	○	●	●[1–3]	○	—
Maintenance	○	●	○	—	—
Dismantling	○	●	○	○	—
Scrapping	○	●	○	○	—
Key:					
●	**PPE REQUIRED**				
○	**PPE AVAILABLE OR TO BE USED IF NECESSARY**				
—	**PPE NOT REQUIRED**				

1. During these operations, gloves must be cut-resistant. Failure to use the personal protection equipment by operators, specialized personnel or users can involve exposure to harm to health (depending on the model).
2. During these operations, gloves must be heatproof and suitable for contact with water and the substances used (refer to the safety data sheet of the substances used for the information regarding the required PPE). Failure to use the personal protection equipment by operators, specialised personnel or users can involve exposure to chemical risk and cause possible harm to health (depending on the model).
3. During these operations, gloves must be suitable for contact with chemical substances used (refer to the safety data sheet of the substances used for information regarding the required PPE). Failure to use the personal protection equipment by operators, specialized personnel or users can involve exposure to chemical risk and cause possible harm to health (depending on the model).

A.4 Transport, handling and storage

- Due to their size, the machines cannot be stacked on top of each other during transport, handling and storage; this eliminates any risks of loads tipping over due to stacking.

- Do not stand under suspended loads during loading or unloading operations. Unauthorized personnel must not enter the work area.
- The weight of the appliance alone is not sufficient to keep it steady.
- For machine lifting and anchoring, do not use movable or weak parts such as: casings, electrical raceways, pneumatic parts, etc.
- Do not push or pull the machine to move it, as it may tip over. Use proper tool to lift the machine.
- Machine transport, handling and storage personnel must be adequately instructed and trained regarding the use of lifting systems and personal protection equipment suitable for the type of operation carried out.

A.5 Installation and assembly

- Follow the installation instruction supplied with the machine.
- Do not install a damaged machine. Any missing or faulty parts must be replaced with original parts.
- Do not make any modifications to the parts supplied with the machine.
- Disconnect the machine from the power supply before carrying out any installation procedure. Connect the machine to the power supply only at the end of the installation.
- The machine is not suitable for installation outdoors and/or in places exposed to atmospheric agents (rain, direct sunlight, freeze, humid and dusty location, etc.).
- Do not install the machine over 2000 meters above sea level.
- Make sure that the floor where you install the machine is flat, stable, heat resistant and clean.
- If available, make sure to install the accessory to fix the machine to the floor.
- Use a ladder with suitable protection for work on machines with high accessibility.

A.6 Electrical connection

- Work on the electrical systems must only be carried out by a specialised personnel.
- Make sure that the electrical information on the rating plate agrees with the power supply.
- Make sure to install the machine in accordance with the safety regulations and local laws of the country where used.
- If the power cable is damaged it must be replaced by the Customer Care Service or in any case by specialised personnel, in order to prevent any risk.
- The machine must be correctly earthed. The manufacturer is not responsible for the consequences of an inadequate earthing system.
- If present, connected the machine to the equipotential protection circuit⏚.
- To protect the power supply of the machine against short circuits and/or overloads, install a thermal fuse or a suitable automatic thermal magnetic circuit breaker, ADS (Automatic Disconnection of Supply).
- To protect the power supply of the machine against current leakages, install a high-sensitivity manual reset RCD (Residual Current Device), suitable for overvoltage category III.
- For protection against indirect contacts (depending on the type of supply provided for and connection of earths to the equipotential protection circuit⏚) refer to point 6.3.3 of EN 60204-1 (IEC 60204-1) with the use of protection devices that ensure automatic cut-off of the supply in case of isolation fault in the TN or TT systems or, for IT systems, the use of isolation controllers or differential current protection devices to activate automatic power disconnection (an isolation controller must be provided for indicating a possible first earth fault of a live part, unless a protection device is supplied for switching off the power in case of a such a fault. This device must activate an acoustic and/or visual

signal which must continue for the entire duration of the fault). For example: in a TT system, a residual current device with cut-in current (e.g. 30 mA) coordinated with the earthing system of the building where the machine is located must be installed ahead of the supply.

- On all rack type dishwasher, make sure to install an emergency switch at the infeed and outfeed. For all additional modules installed later, move the emergency switch at the ends of the equipment.
- For all the additional modules installed later, make sure that the power cable supply is properly sized.

A.7 Service

- Only original spare parts can ensure the safety standards of the appliance.

A.8 Disposal of packing

- Dispose of each packaging items respecting the current regulation in the country of installation.

A.9 Machine disposal

- Work on the electrical equipment must only be carried out by a specialised personnel, with the power supply disconnected.
- Dismantling operations must be carried out by specialised personnel.
- Make the appliance unusable by removing the power cable and any compartment closing devices, to prevent the possibility of someone becoming trapped inside.
- Refer to “A.3 *Personal protection equipment*“ for suitable personal protection equipment.
- When scrapping the machine, the “CE“ marking, this manual and other documents concerning the appliance must be destroyed.

IMPORTANT
Save these instructions carefully for further consultation by the various operators.

B GENERAL INFORMATION

B.1 Introduction

This manual contains information relevant to various appliances. The product images in this guide are only an example.

The drawings and diagrams given in the manual are not in scale. They supplement the written information with an outline, but are not intended to be a detailed representation of the appliance supplied.

The numerical values given on the appliance installation diagrams refer to measurements in millimeters and/or inches.

B.2 Definitions

Listed below are the definitions of the main terms used in the manual. It is advisable to read them carefully before use.

Operator	machine installation, adjustment, use, maintenance, cleaning, repair and transport personnel.
Manufacturer	Electrolux Professional SpA or any other service centre authorised by Electrolux Professional SpA.
Operator for normal machine use	an operator who has been informed and trained regarding the tasks and hazards involved in normal machine use.
Customer Care service or specialised technician	an operator instructed/trained by the Manufacturer and who, based on his professional and specific training, experience and knowledge of the accident-prevention regulations, is able to appraise the operations to be carried out on the machine and recognise and prevent any risks. His professionalism covers the mechanical, electrotechnical and electronics fields.
Danger	source of possible injury or harm to health.
Hazardous situation	any situation where an operator is exposed to one or more hazards.
Risk	a combination of probabilities and risks of injury or harm to health in a hazardous situation.
Protection devices	safety measures consisting of the use of specific technical means (guards and safety devices) for protecting operators against risks.
Guard	an element of a machine used in a specific way to provide protection by means of a physical barrier.
Safety device	a device (other than a guard) that eliminates or reduces the risk; it can be used alone or in combination with a guard.

Customer	the person who purchased the machine and/or who manages and uses it (e. g. company, entrepreneur, firm).
Emergency stop device	a group of components intended for the emergency stop function; the device is activated with a single action and prevents or reduces damage to persons/ machines/property/animals.
Electrocution	an accidental discharge of electric current on a human body.

B.3 Appliance and manufacturer's identification data

An example of the marking or data plate on the machine is given below:

Made in EU 2017
F.Mod. Comm.Model
PNC Ser.Nr.
EL V Hz kW
Type ref.
CE IPX5 WEEE
Electrolux Professional spa - Viale Treviso, 15 - 33170 Pordenone (Italy)

The data plate gives the product identification and technical data. The meaning of the various information given on it is listed below:

F.Mod.	factory description of product
Comm.Model	commercial description
PNC	production number code
Ser.Nr.	serial number
V	power supply voltage
Hz	power supply frequency
kW	max. power input
Type ref.	list of acronyms used to identify the type of machine, uniquely
IPX5	dust and water protection rating
CE	CE marking
Electrolux Professional SpA Viale Treviso 15 33170 Pordenone Italy	manufacturer

The data plate is located on the front panel of the equipment.

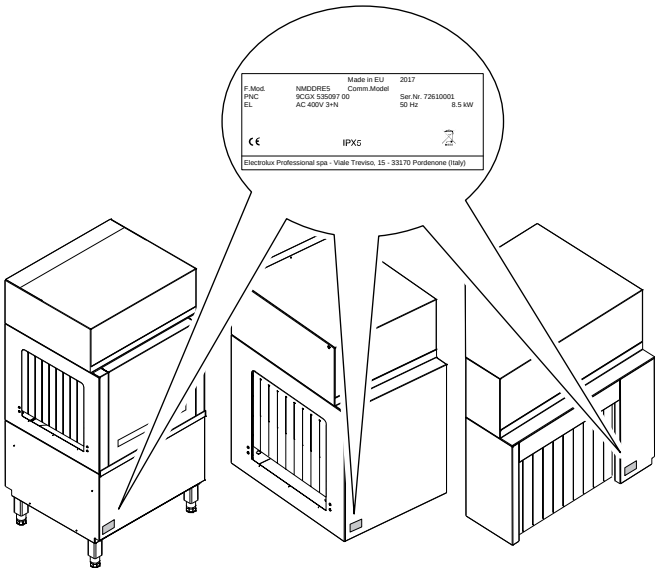

Fig. 1 Data plate position

IMPORTANT
When installing the appliance, make sure the electrical connection is carried out in compliance with that specified on the data plate.

NOTE!
Refer to the data given on the machine's data plate for relations with the Manufacturer (e.g. when ordering spare parts, etc.).

B.4 Additional indications

The drawings and diagrams given in the manual are not in scale. They supplement the written information with an outline, but are not intended to be a detailed representation of the machine supplied

The numerical values given on the machine installation diagrams refer to measurements in millimeters and/or inches.

Conventionally, the appliance are depicted with the rack feed side on the right (“R“); appliance with left rack feed (“L“) are depicted only if necessary, in which case the side will be expressly specified.

B.4.1 How to interpret the factory description

The factory description on the data plate has the following meaning:

(1)	(2)	(3)	(4)	(5)	6
N	MH	DR	E	5	M
N	MD	DR	E	5	
N	LD	DR	E	5	M
N	CD	DR	E	5	

	Description	Possible variables
(1)	Mark	N = To brand
(2)	Module Lenght	MH = 22″ Hot Air Blower without door; MD = 22″ with door; LD = 35″; CD = corner 90°
(3)	Type of dryer	DR = for Dual Rinse dishwasher
(4)	Supply	E = Electric
(5)	Frequency	5 = 50 Hz 6 = 60 Hz
6	Other functions	M = Marine version

B.5 Type reference

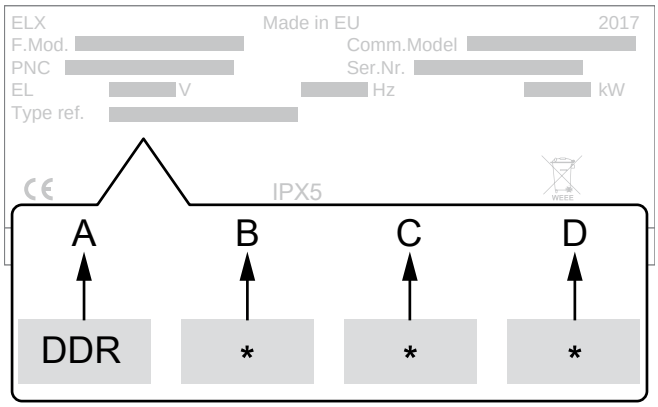

Legend

A	Type of appliance • Dual Rinse Dryer
B	Dimension • 0 = medium 22″ • 1 = large 35″ • 2 = corner 90°

Legend (cont'd.)

C	Door • 0 = without door • 1 = with door
D	Power supply • 0 = Electric

CAUTION
For all the additional modules installed later. make sure that the power cable supply is properly sized.

B.6 Responsibility

The Manufacturer declines any liability for damage and malfunctioning caused by:

- non-compliance with the instructions contained in this manual;
- repairs not carried out in a workmanlike fashion, and replacements with parts different from those specified in the spare parts catalogue (the fitting and use of non-original spare parts and accessories can negatively affect appliance operation and invalidates the original manufacturer warranty);
- operations carried out by non-specialised personnel;
- unauthorized modifications or operations;
- missing, lack or inadequate maintenance;
- improper appliance use;
- unforeseeable extraordinary events;
- use of the appliance by uninformed and / or untrained personnel;
- non-application of the current provisions in the country of use, concerning safety, hygiene and health in the workplace.

The Manufacturer declines any liability for:

- damage caused by arbitrary modifications and conversions carried out by the user or the Customer;
- inaccuracies contained in the manual, if due to printing or translation errors.

The employer, workplace manager or service technician are responsible for identifying and choosing adequate and suitable personal protection equipment to be worn by operators, in compliance with regulations in force in the country of use.

Any supplements to the installation, use and maintenance manual the Customer receives from the Manufacturer will form an integral part of the manual and therefore must be kept together with it.

B.7 Copyright

This manual is intended solely for consultation by the operator and can only be given to third parties with the permission of Electrolux Professional SpA.

B.8 Keeping the manual

The manual must be carefully kept for the entire life of the appliance, until scrapping. The manual must stay with the appliance in case of transfer, sale, hire, granting of use or leasing.

B.9 Recipients of the manual

This manual is intended for:

- the carrier and handling personnel;
- installation and commissioning personnel;
- specialised personnel - Customer Care service (see service manual).

B.10 Coupling to the rack-type dishwasher

The Manufacturer provides for the possibility of equipping the rack-type dishwashers included in the Electrolux Professional SpA product catalogue with the drying tunnel systems referred to in this manual, with the possibility of obtaining various configurations.

The “CE“ Declaration of conformity coming with the rack-type dishwasher also provides for these configurations.

The Manufacturer provides for the possibility of connecting the drying tunnel to rack-type dishwashers made exclusively by Electrolux Professional SpA. The Manufacturer does not provide for the possibility of making other types of product combinations (to create a series of machines arranged and controlled in an integral way) with systems different from that described above. The Manufacturer declines any liability for damage caused by arbitrary modifications and conversions carried out by the user or third parties. For requests or for further information, contact Electrolux Professional S.p.A. - Via Treviso, 15 - 33170 Pordenone - Italy.

C TECHNICAL DATA

C.1 Main technical characteristics

Model		**DT 35”**	**DT 22”**	**DT 90°**
Power supply		Electric	Electric	Electric
Power supply voltage [V] Frequency [Hz]		380 - 415V 3N [50-60 Hz] 220 - 240V 3 [60 Hz] 400V 3 [50 Hz] 440V 3 [60 Hz]	380 - 415 3N [50 Hz]	380 - 415V 3N [50-60 Hz] 220 - 240V 3 [60 Hz] 400V 3 [50 Hz] 440V 3 [60 Hz]
Max. power. absorbed	kW	8.5	4.4	8.5
Temperature	℃	70	70	70
Protection rating		IPX5	IPX5	IPX5
Net weight	kg	125	80[1]	65
Air flow	m^3/h	1200	540	1200
Ventilation motor power	kW	0.15	0.12	0.15
Current absorbed by fan	A	1.33	0.51	1.33
Heating element	kW	8.25	4.13	8.25
Legal noise level Leq	dB(A)	LpA:62dB - KpA:1.5dB[2]	LpA:62dB - KpA:1.5dB[2]	LpA:62dB - KpA:1.5dB[2]

1. For model without door 75 kg.
2. The noise emission values have been obtained according to EN ISO 11204.

C.2 Characteristics of power supply

The AC power supply to the machine must meet the following conditions:

- max. voltage variation ± 6%
- max. frequency variation ± 1% continuous ± 2% for a short period.

Harmonic distorsion, unbalanced three-phase supply voltage, voltage pulses, interruption, dips and the other electric characteristics must respect the provisions of point 4.3.2 of Standard EN 60204-1 (IEC 60204-1).

D TRANSPORT, HANDLING AND STORAGE

WARNING
Refer to "*Safety Information*".

D.1 Introduction

Transport (i. e. transfer of the appliance from one place to another) and handling (i. e. transfer inside workplaces) must occur with the use of special and adequate means.

CAUTION

The appliance must only be transported, handled and stored by specialised personnel, who must have:

- specific technical training and experience in the use of lifting systems;
- knowledge of the safety regulations and applicable laws in the relevant sectors;
- knowledge of the general safety rules;
- personal protection equipment suitable for the type of operation carried out;
- the ability to recognize and avoid any possible hazard.

IMPORTANT
Immediately check for any damage caused during transport.
Inspect the packaging before and after unloading.

D.2 Handling

Arrange a suitable area with flat floor for appliance unloading and storage operations.

D.2.1 Procedures for handling operations

Before lifting:

- send all operators to a safe position and prevent persons from entering the handling area;
- make sure the load is stable;
- make sure no material can fall during lifting. Manoeuvre vertically in order to avoid impacts;
- handle the appliance, keeping it at minimum height from the ground.

For correct and safe lifting operations:

- use the type of equipment most suitable for characteristics and capacity (e.g. electric pallet truck or lift truck);
- cover sharp edges;
- check the forks and lifting procedures according to the instructions given on the packing.

D.2.2 Shifting

The operator must:

- have a general view of the path to be followed;
- stop the manoeuvre in case of hazardous situations.

D.2.3 Placing the load

- Before placing the load, make sure the way is free and that the floor is flat and can take the load.
- Remove the appliance from the wooden pallet, move it to one side, then slide it onto the floor.

D.3 Storage

The appliance and/or its parts must be stored and protected from damp, in a non-aggressive place, free of vibrations and with room temperatures between -10°C [14°F] and 50°C [122°F].

The place where the appliance is stored must:

- can take the appliance load,
- have a flat support surface to avoid deforming the appliance or damage to the support feet.

D.4 Customer packaging checks

- The forwarder is responsible for the goods during transport and delivery.
- Make a complaint to the forwarder in case of visible or hidden damage.
- Specify any damage or shortages on the dispatch note.
- The driver must sign the dispatch note: the forwarder can reject the claim if the dispatch note is not signed (the forwarder can provide the necessary form).
- For hidden damage or shortages becoming apparent only after unpacking, request the forwarder for inspection of the goods within and no later than 15 days after delivery.

After packaging checks

1. Remove the packaging.
   Take care when unpacking and handling of the appliance to not cause any shocks on itself.
2. Keep all the documentation contained in the packaging.

E INSTALLATION AND ASSEMBLY

WARNING
Refer to "*Safety Information*".

E.1 Introduction

WARNING

Make sure that the switch disconnector of the machine is locked in the Off position - "O".

E.2 Customer responsibilities

The Customer must provide for the following:

- installation of an adequate electrical power supply ahead of the appliance, according to the equipment's technical specifications (C *TECHNICAL DATA* and C.2 *Characteristics of power supply*);
- adducting for the electrical connection between the workplace electric panel and the equipment;
- the water supply and drain connections and other connections as indicated in the technical data table and in the installation diagram;
- arrangement of general workplace lighting to guarantee at least 500 lx according to point 5.2.2 of EN 12464-1 or according to a value established by the current regulations in the country of use;
- the addition of the drying module changes the arrangement of the emergency stops. This arrangement must be re-examined (E.19 *Positioning of emergency switches*).

E.3 Installation of dryer module on the rack-type dishwasher

The Manufacturer provides for the possibility of connecting the drying tunnel only to rack-type dishwashers included in the Electrolux Professional SpA catalogue.

E.4 Characteristics of the place of machine installation

This additional module is designed for installation in professional and not domestic-type kitchens (for installation of the entire machine, refer to the rack-type dishwasher instruction manual). For this module, water collection traps/metal grates must be arranged in the floor at the machine discharges (refer to " *Installation diagram*"), possibly replaceable with a single water trap sized for a flow rate of at least 3 l/s.

E.5 Appliance space limits

- A suitable space must be left around the machine (for operations, maintenance, for a correct air exchange, etc.).
- This space must be increased in case of use and/or transfer of other equipment and/or means or if exit routes are necessary inside the workplace.

CAUTION

- Install the machine at a distance of not less than 50 mm from the wall so as not to affect correct ventilation of internal components.
- For the machine with heat pump, make sure that the distance from the ceiling is not less than 300 mm.

E.6 Positioning

Unless otherwise agreed, the drying tunnel is supplied in a single unit. The drying tunnel must be taken to the place of installation and the packing base removed only when being installed.

- Position the drying tunnel in the required place.
- Depending on the model, adjust the equipment by turning the special adjustable feet.

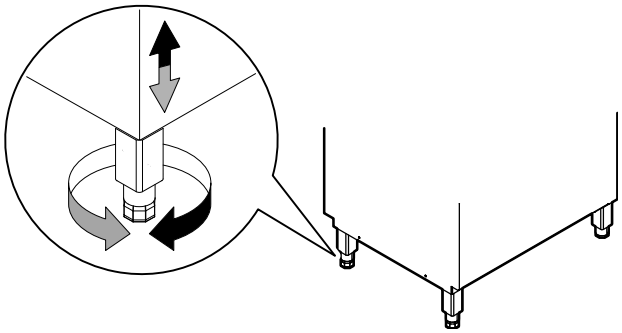

- Fix the drying tunnel to the existing dishwasher.

  The installer must carefully follow the installation instructions.
- Carefully remove the protective film from the outer panels without tearing it, to avoid leaving traces of glue.

CAUTION

The gravity centre of drying tunnel does not coincide with its geometric centre.

E.7 Extraction hood

Make sure to position the possible extraction hood at a distance of not less than 400 mm from the machine so as not to compromise machine operation.

The extractor hood is installed to remove the steam emitted by the machine. The hood air delivery must be calculated taking into account the machine model, the type of installation and the work environment where installed.

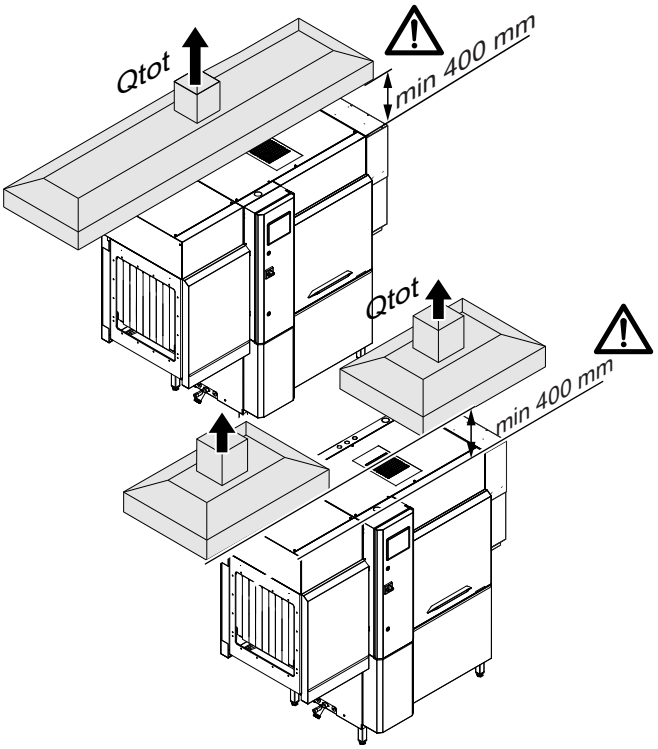

Model	Qtot (VDI2052)
...DR150... (without ESD)	3137 m³/h
...DR150... (with ESD)	1600 m³/h
...DR20P...(without ESD)	3486 m³/h
...DR20P...(with ESD)	1817 m³/h
...DR25P...(without ESD)	3720 m³/h
...DR25P...(with ESD)	1958 m³/h
...DR250...(without ESD)	3720 m³/h
...DR250...(with ESD)	1958 m³/h

E.8 Disposal of packing

The packing must be disposed of in compliance with the current regulations in the country where the appliance is used. All the packing materials are environmentally friendly.

They can be safely kept, recycled, or burned in an appropriate waste incineration plant. Recyclable plastic parts are marked as follows:

PE	**Polyethylene** • Outer wrapping • Instructions bag
PP	**Polypropylene** • Straps
PS	**Polystyrene foam** • Corner protectors

The parts in wood and cardboard can be disposed of, respecting the current regulations in the country where the appliance is used.

E.9 Mechanical connections

WARNING

Make sure that the switch disconnector of the machine is locked in the Off position - “O“.

IMPORTANT

The drying tunnels 90° and 22″ must be lifted and positioned by two people: accident risk due to excessive weight.

CAUTION

- Refer to “A.3 *Personal protection equipment*“ for suitable personal protection equipment. Use gloves and other personal protection equipment according to the risks present (e. g. glasses in case of risk of flying splinters during drilling).
- Install only Electrolux Professional rack handling system (non-motor-operated).

NOTE!

To install the drying tunnel in a left to right machine, refer to the corresponding instructions provided.

E.10 Additional instructions for models with energy saving device

Before installing the drying tunnel in models with energy saving device installed, you have to close the steam suction inlet where the drying tunnel must be installed.

- Remove the ESD covers.

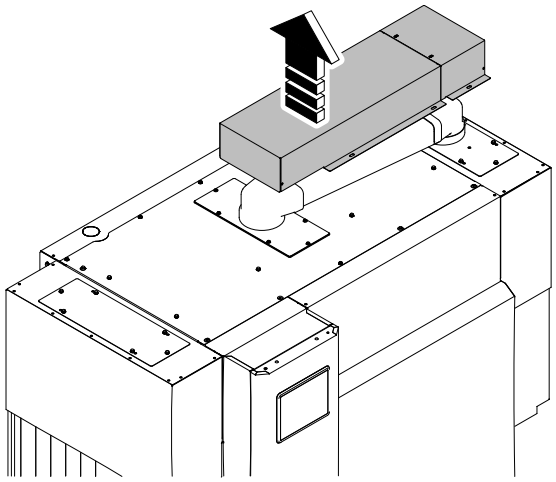

- Remove the flat plastic duct.

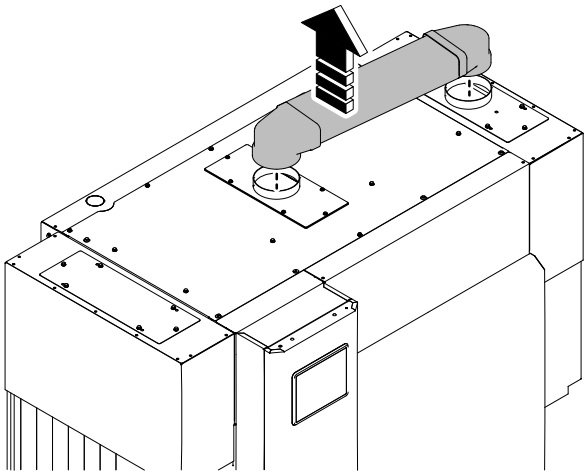

- Remove the top panels.

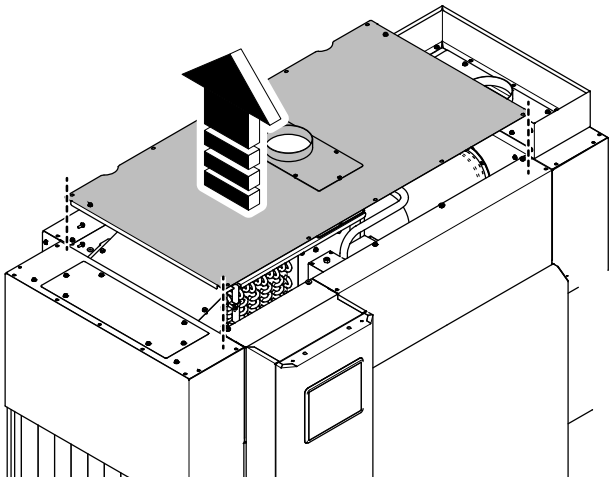

E.10.1 Right to left dishwasher

- Remove the left hood.

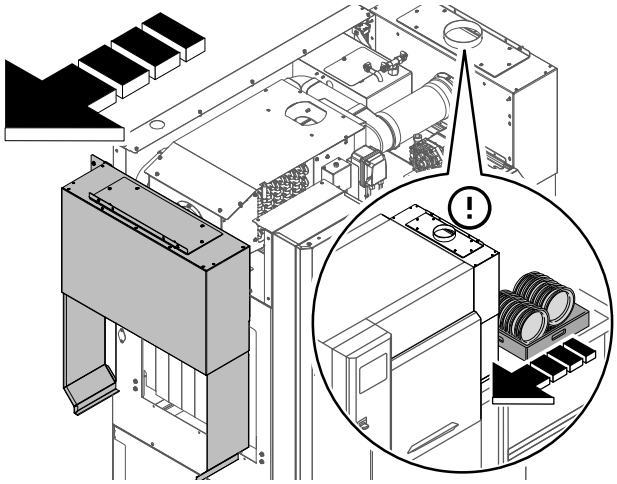

- Fit directly the cap in the frame of the energy saving device module.

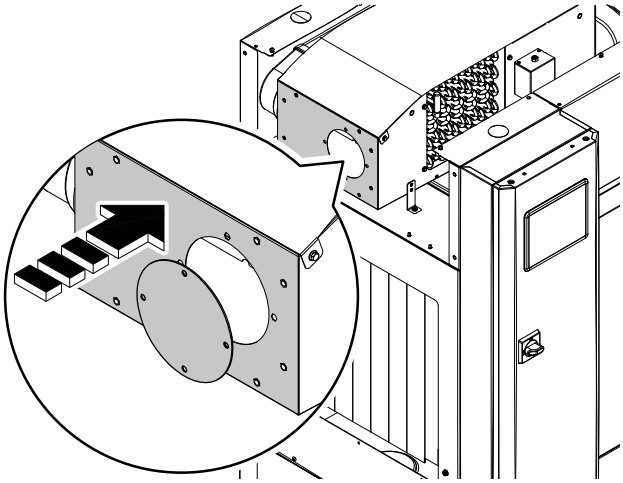

E.10.2 Left to right dishwasher

- Remove the right hood.

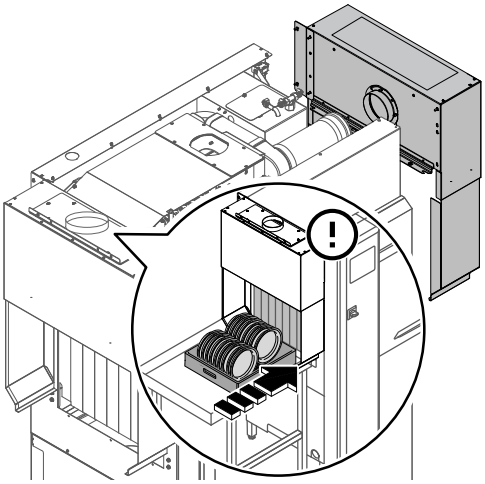

- Remove the hose from the 90° bend.

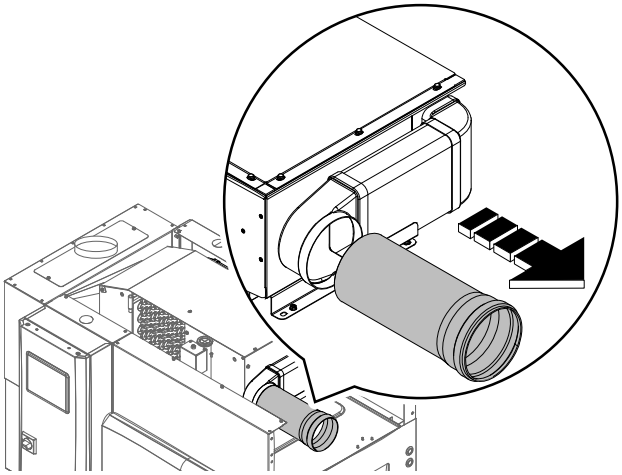

- Seal and insert the flange into the 90° bend then fit the cap on the flange.

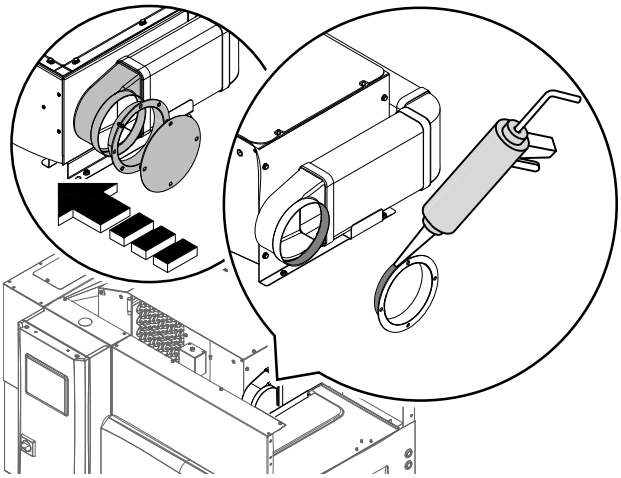

IMPORTANT
After this operations you can install the tunnel dryer.

E.11 Drying tunnel 22″

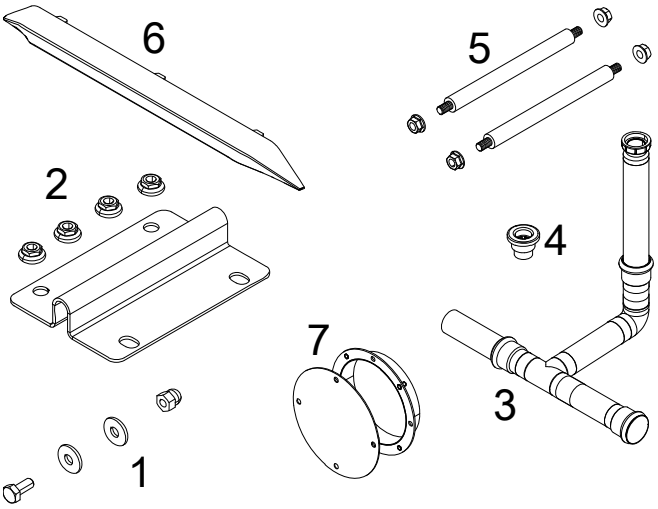

Joining kit list

1	18 screws (M6x14mm), 36 washers (⌀=6x18mm), 18 cap nuts (⌀=6mm)
2	2 connection bracket and 8 flange nuts (⌀=5mm)
3	Connection hose for water draining
4	Drain
5	Pins and nuts to fix the slide of the dryer to the slide of the machine

Joining kit list (cont'd.)

6	Handle NOTE! Depending on the model, install the handle at the end of all operations.
7	Cap for energy saving device suction hose NOTE! Only for models with energy saving device. Please refer to E.10 *Additional instructions for models with energy saving device*.

1. Remove the side panels “1-2“ from the machine.

IMPORTANT

For models with energy saving device refer to this chapter E.10 *Additional instructions for models with energy saving device*

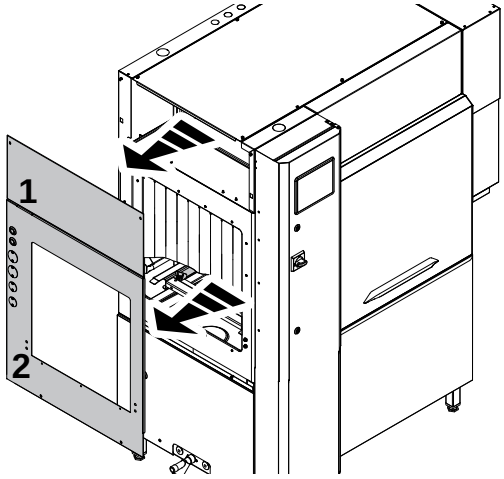

2. Install the connection bracket on the ⌀=5 mm stud bolts of the dryer roof. Firmly secure the brackets with ⌀=5 mm flange nuts.

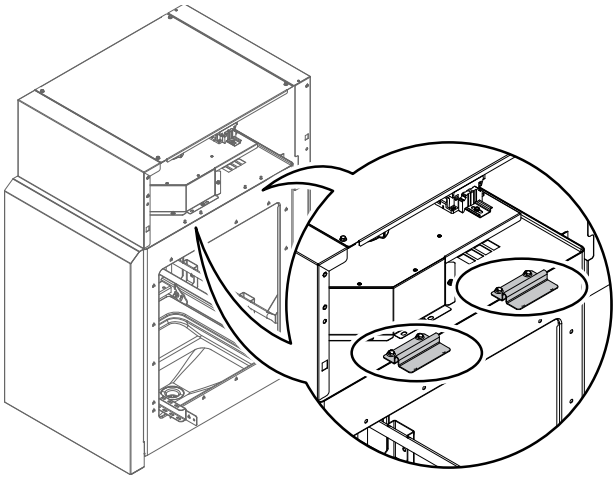

3. Place the drying tunnel near the machine.

IMPORTANT
Make sure the modules are correctly aligned. If necessary use a pallet trucks to make easy this operation.

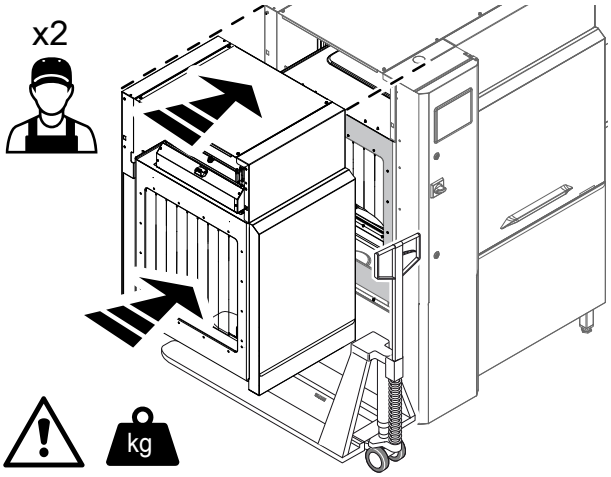

4. Join the module openings with the bolts, washer and nuts (see detail “A“).
5. Firmly secure the connection brackets on the roof of the dryer and machine with ⌀=5 mm flange nuts (see detail “B“).

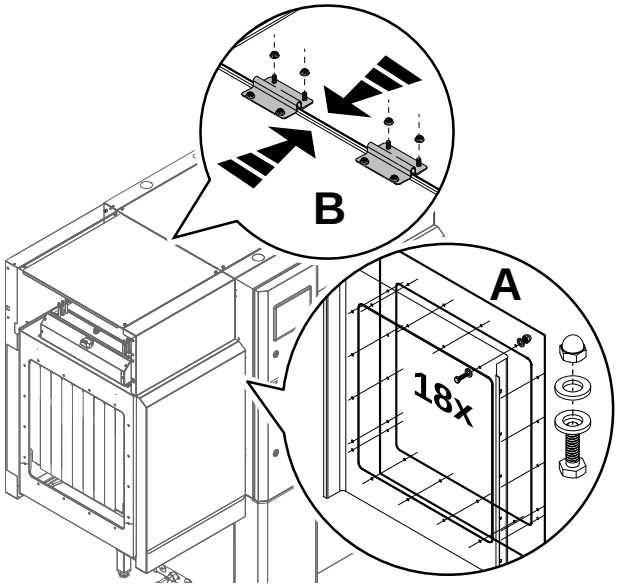

6. Insert the slide for basket (see detail “C“). Fix the slide of the dryer to the slide of the machine (see detail “D“).

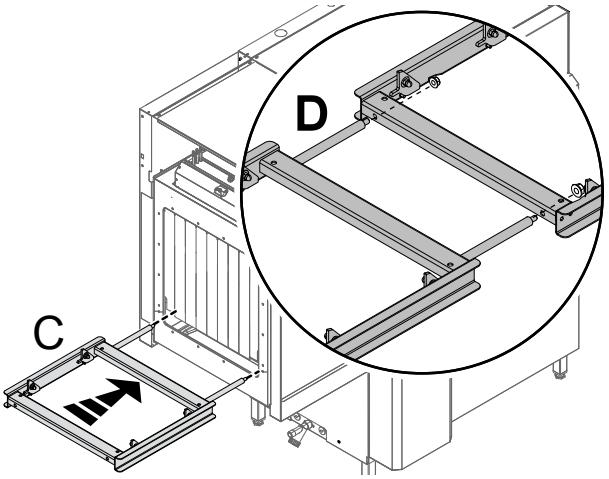

7. Refit the side panels “1-2“ on the drying tunnel side.

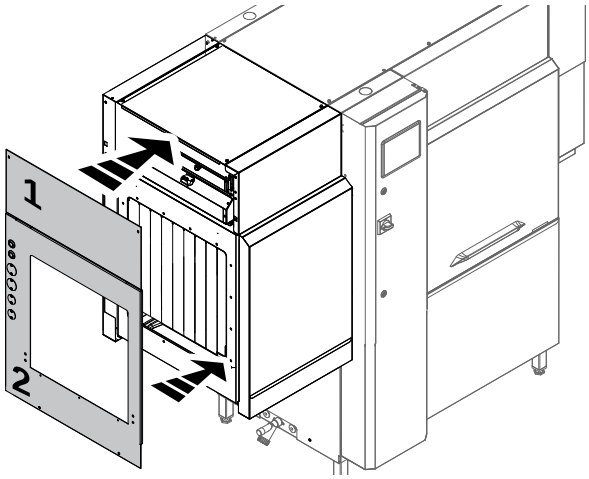

8. Install the drain in the dryer to discharge the residual water.

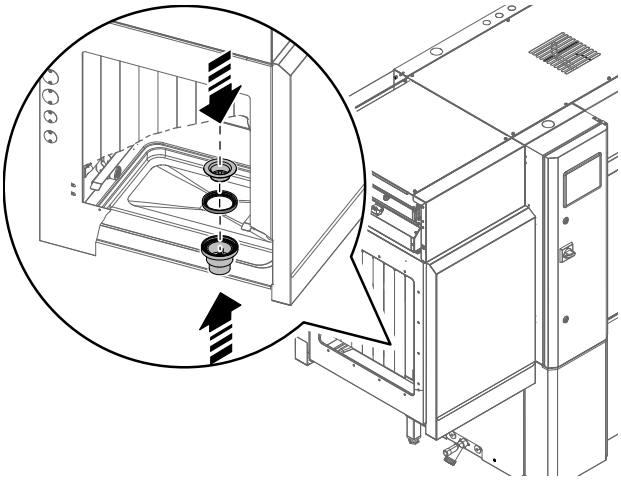

9. Connect the drain outlet of the dryer and the machine with the supplied connection hose.

IMPORTANT
Make sure to remove the plug at the end of the drain connection hose.

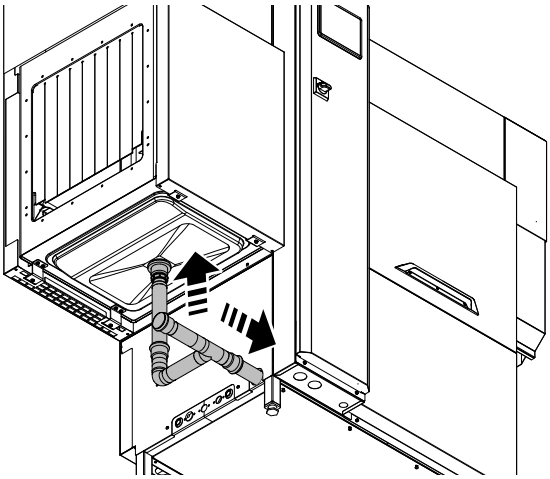

To install the drying tunnel in a left to right machine, it is necessary reverse the position of the:

- fan assembly;

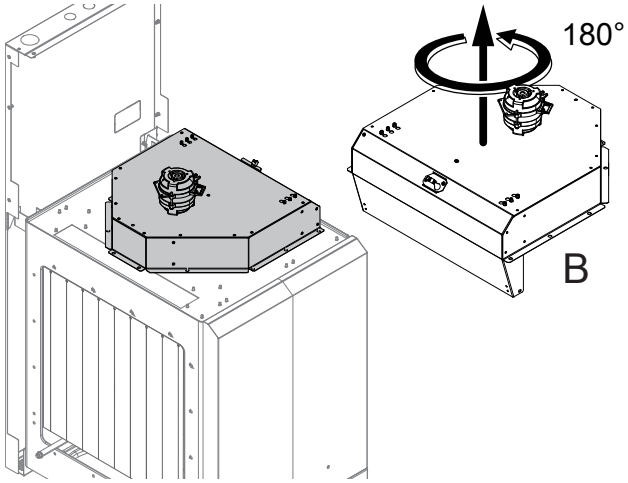

- slide for baskets;

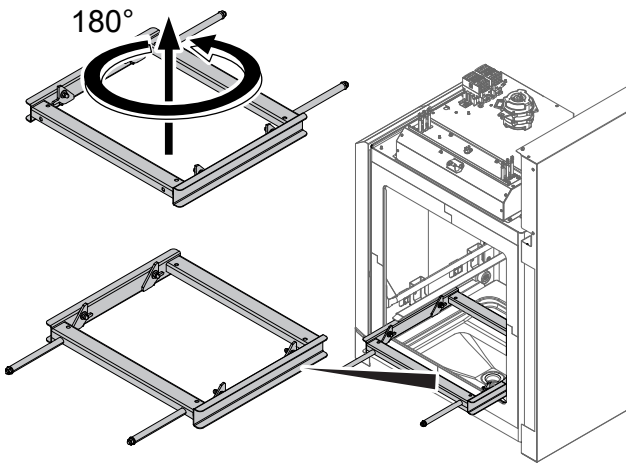

- curtain.

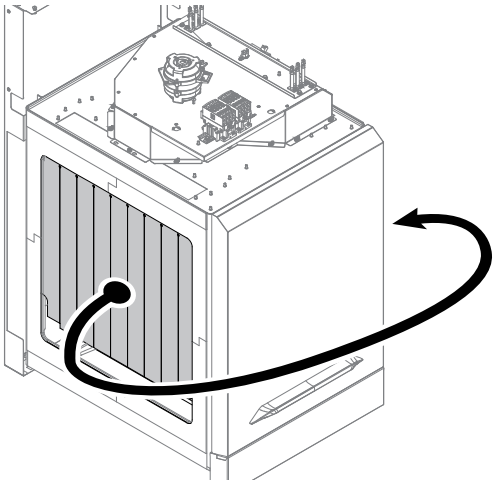

E.12 Drying tunnel 35”

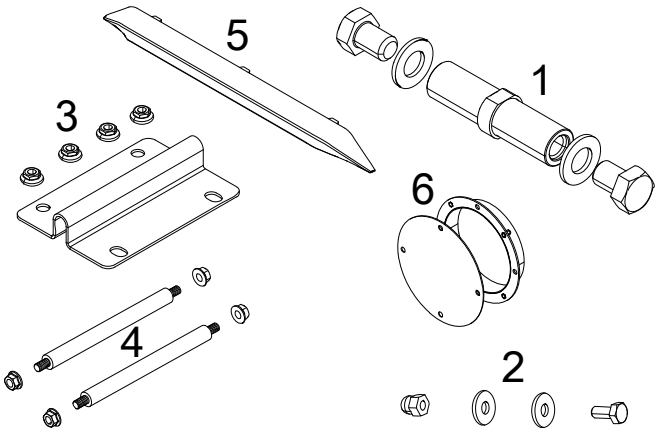

Joining kit list

1	4 special spacer, 4 screws (M14x20mm), 4 washers (⌀=15x28mm)
2	18 screws (M6x14mm), 36 washers (⌀=6x18mm), 18 cap nuts (⌀=6mm)
3	2 connection bracket and 8 flange nuts (⌀=5mm)
4	Pins and nuts to fix the slide of the dryer to the slide of the machine
5	Handle NOTE! Depending on the model, install the handle at the end of all operations.
6	Cap for energy saving device suction hose NOTE! Only for models with energy saving device. Please refer to E.10 *Additional instructions for models with energy saving device*.

1. Close the water inlet taps and unscrew the water inlet hoses from the tap.

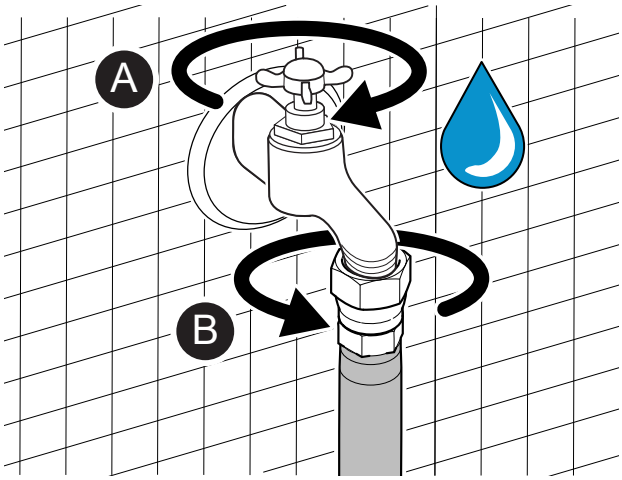

2. Remove the side panels “1-2-3“ from the machine.

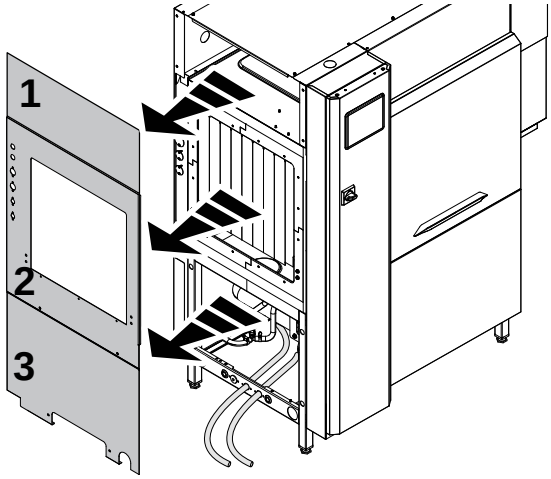

3. Remove the front panel and place the drying tunnel near the machine. Join it with the special spacers with the respective screws and washers (see detail “A“). Join also the drain hose of the drying module with the machine one.

IMPORTANT
Make sure the modules are correctly aligned. If necessary use a pallet trucks to make easy this operation.

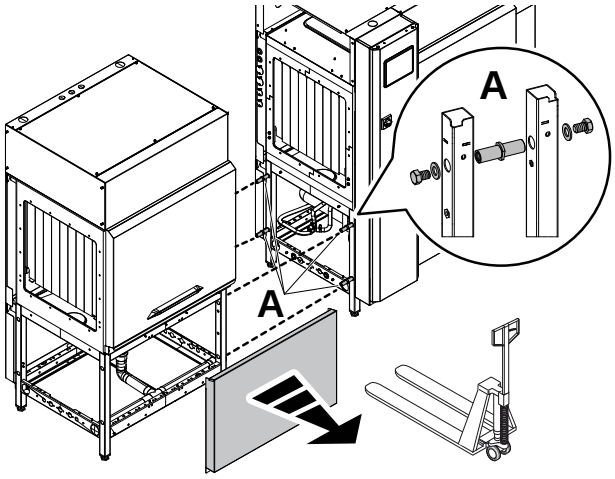

4. Join the module openings with the bolts, washer and nuts (see detail Figure B).

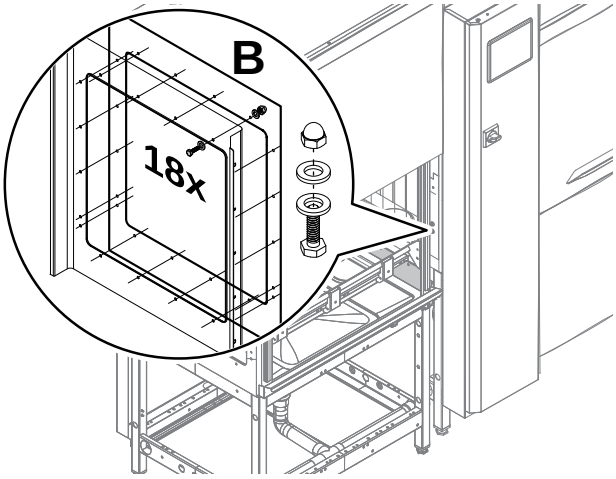

5. Join the roofs of the two modules, fitting the connection bracket on the ⌀=5 mm stud bolts (see detail Figure C). Firmly secure the brackets with ⌀=5 mm flange nuts.

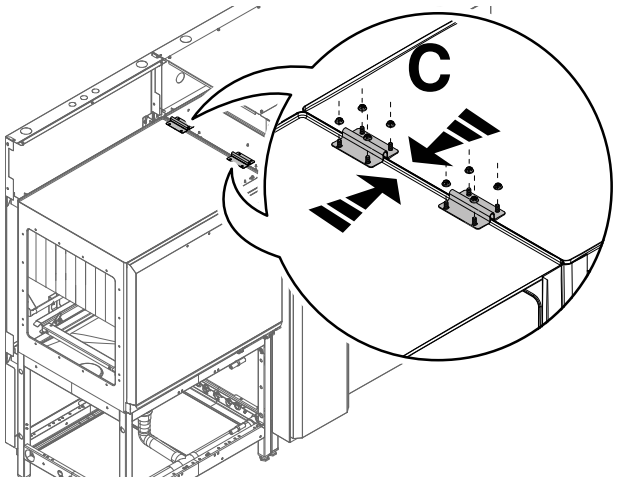

6. Fix the slide of the dryer to the slide of the machine (see detail “D“).

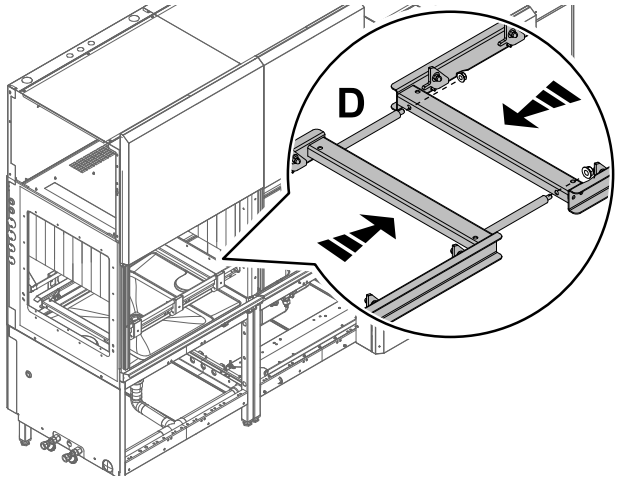

7. Move the water inlet hoses from the dishwasher to drying tunnel;

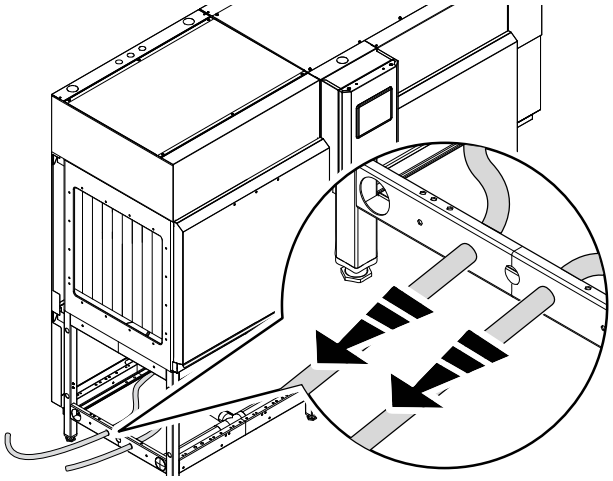

8. Refit:

- the side panels “1“, “2“ and “3“ in the drying tunnel;

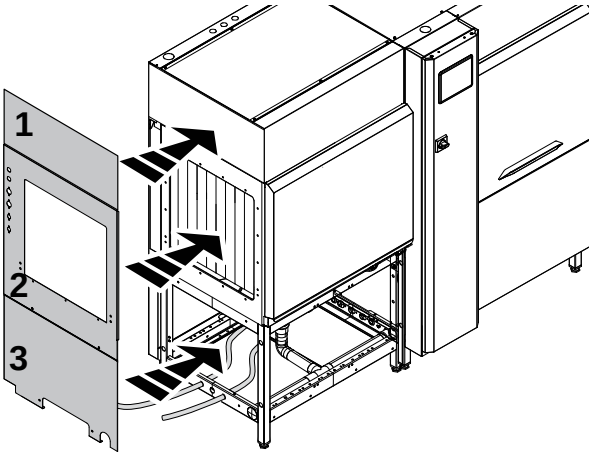

- the front panel of the dryer;

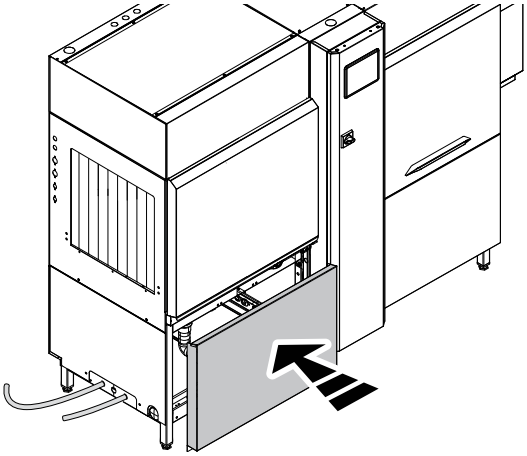

9. Connect again the water inlet hoses to the water taps.

To install the drying tunnel in a left to right machine, it is necessary reverse the position of the:

- fan assembly;

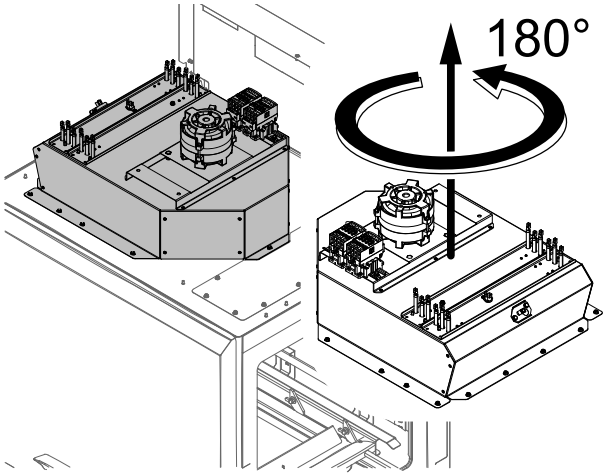

- cap and deflector;

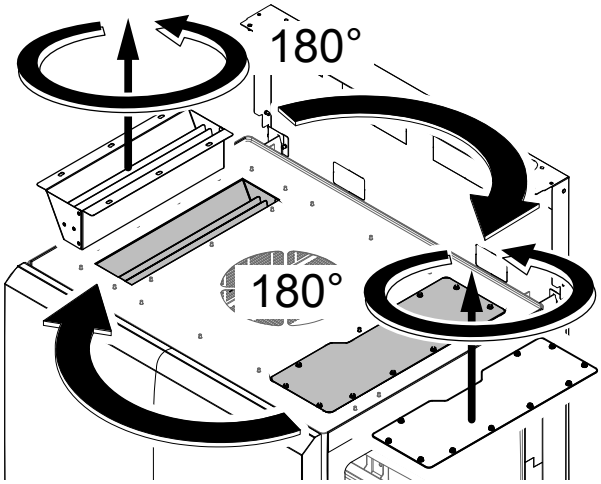

- slide for baskets;
  1. remove the internal deflector;
  2. remove, firmly, and rotate the slide for baskets;
  3. refit the internal deflector.

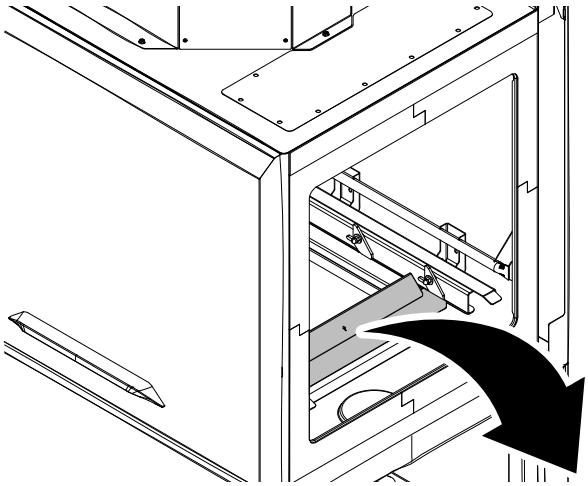

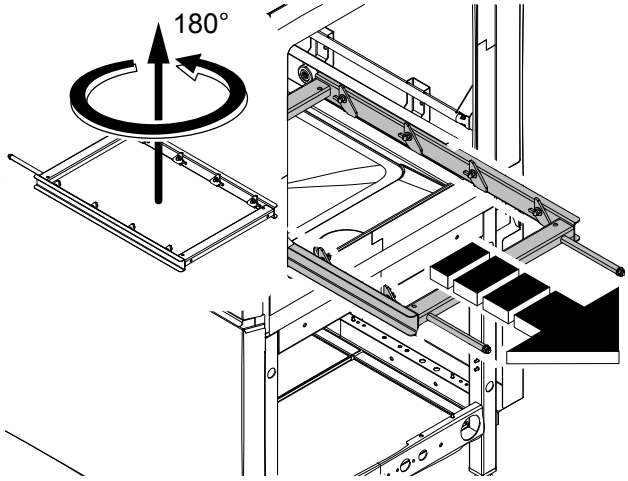

E.13 Drying tunnel corner 90°

CAUTION
Install only Electrolux Professional rack handling system (non-motor-operated).

NOTE!
This drying tunnel can be coupled to a 90° or 180° turntable.

E.13.1 Mechanical connection

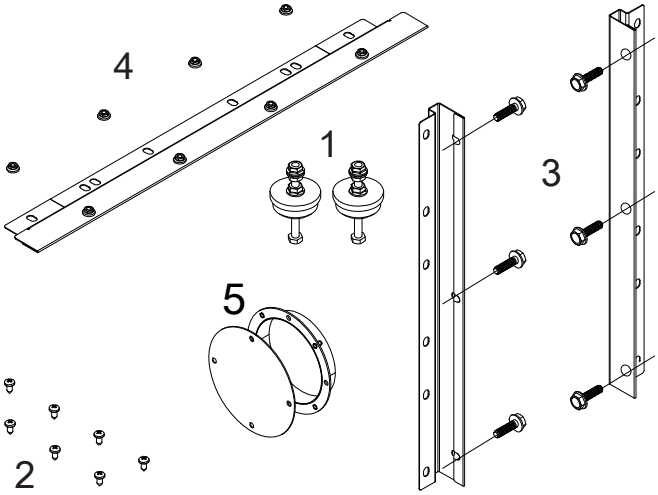

Joining kit list

1	2 Adjustable feet
2	7 self tapping screws (4,2 x 9,5 mm)
3	2 side brackets and 6 screws (5 x 14 mm)
4	Top bracket and 8 flange nuts (⌀=5mm)
5	Cap for energy saving device suction hose

NOTE!
Only for models with energy saving device. Please refer to E.10 *Additional instructions for models with energy saving device*.

1. Install the adjustable feet on the dryer. Place the dryer on the turntable and fix it with the self tapping screws.

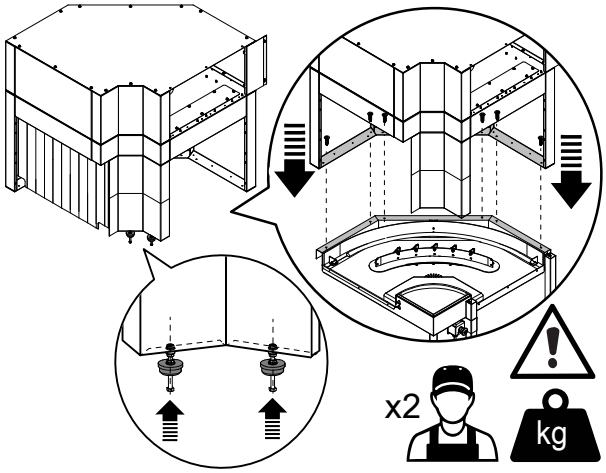

2. Install the side and top brackets on the machine.

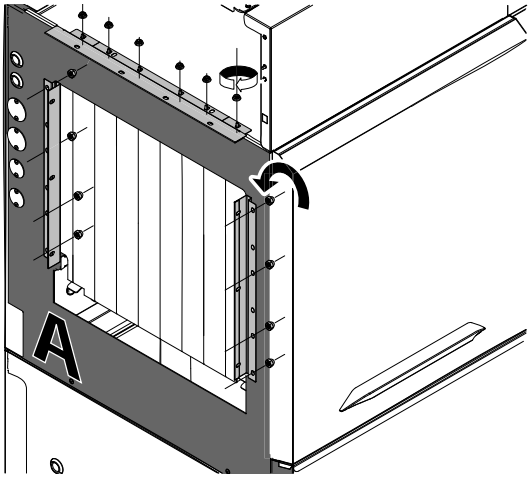

3. Remove the side panel and dispose of at the end of installation, it is not necessary anymore.

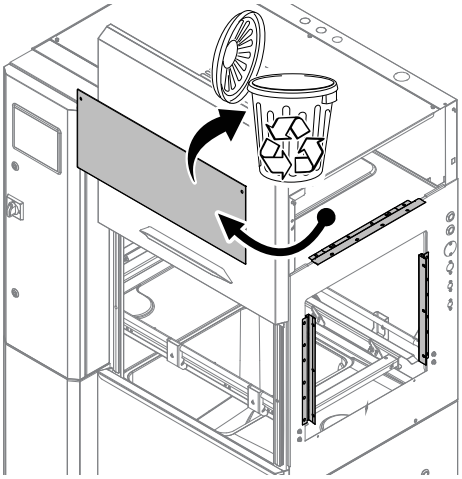

4. Remove the top panel from the drying tunnel to make easier the operations.

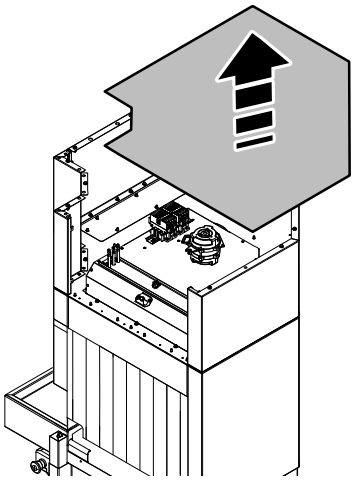

5. Fit the adhesive seal all around the drying module opening.

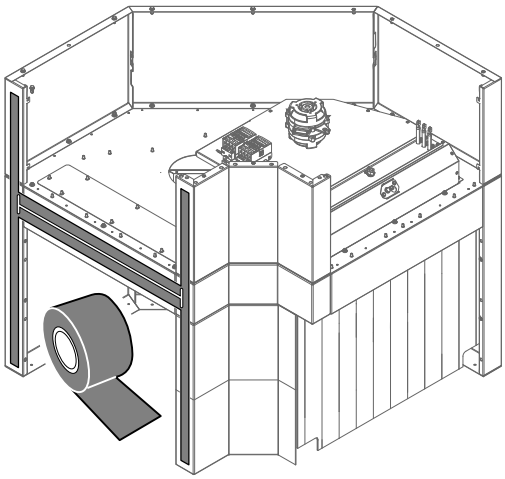

6. Place the drying tunnel near the machine.

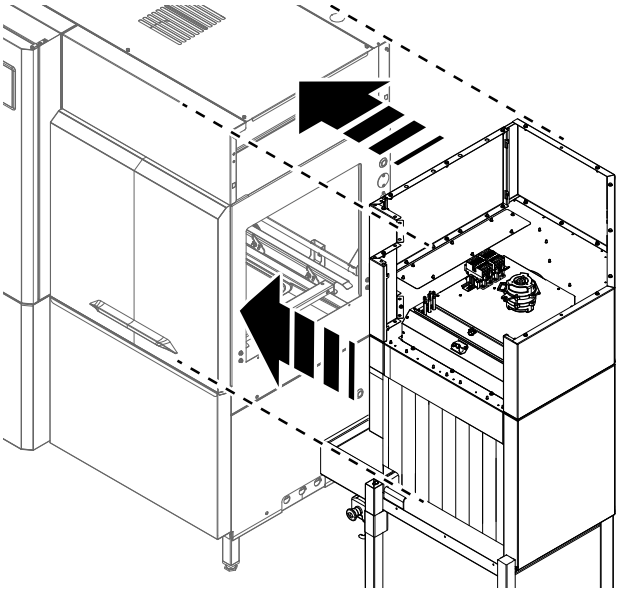

IMPORTANT
Make sure the modules are correctly aligned. If necessary use a pallet trucks to make easy this operation.

7. Join the roofs of the two modules. Fitting the top bracket on the ⌀=5 mm stud bolts and firmly secure it with ⌀=5 mm flange nuts.

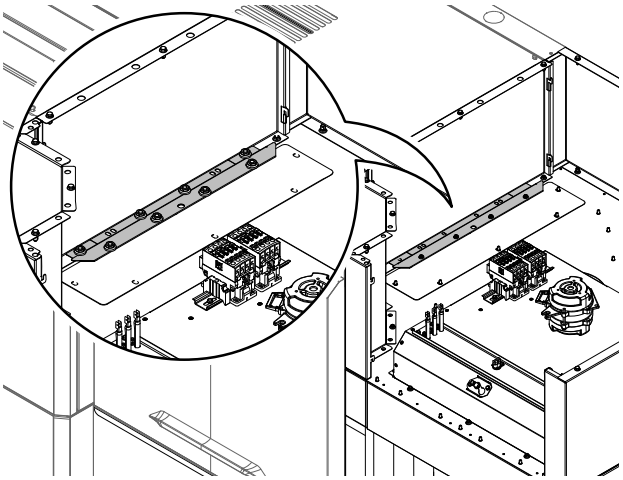

8. Fix the drying module opening to the side brackets. Firmly secure the brackets with the screws (5 x 14 mm).
9. At the end of installation, refit the top panel of the dryer and join the turntable with the machine.

To install the drying tunnel in a left to right machine, it is necessary reverse the position of the:

- fan assembly;

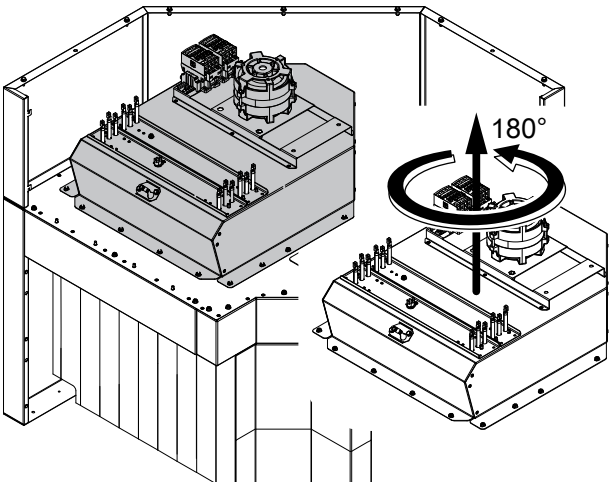

- cap and deflector;

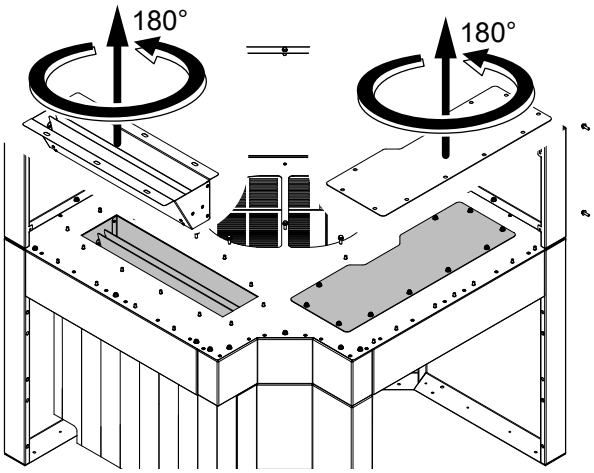

- upper panels;

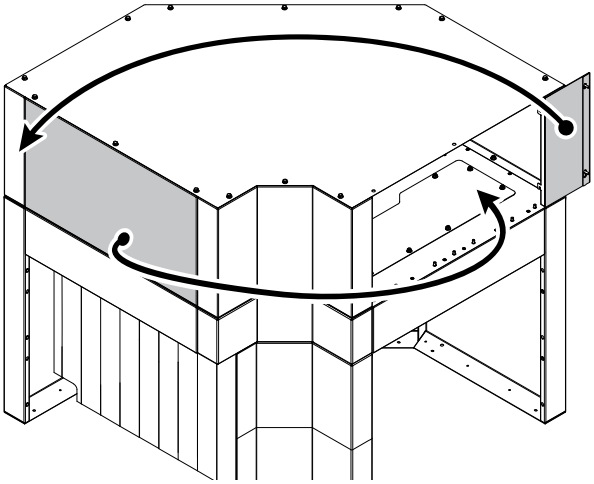

- angular bracket;

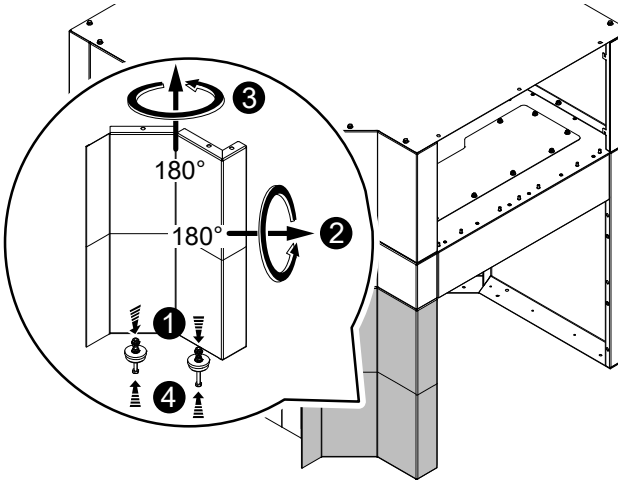

E.13.2 Drilling diagrams for Electrolux Professional rack handling system

- Follow the instructions given by the diagram to make the required holes on the table in order to install the 90° drying tunnel [*Drilling diagrams*].
- If there are available deflectors, follow the instructions given by the diagram to install them in the right position [*Drilling diagrams*].

CAUTION
To make the holes use suitable equipment, complying with the safety standards.
For correct placing of the holes check the position of the holes to be made (according to the type of table) beforehand.

E.14 Electrical connection

WARNING
Refer to "*Safety Information*".

Make sure the machine power supply voltage specified on the data plate matches the mains voltage B.3 *Appliance and manufacturer's identification data*.

Make sure the system power supply is arranged and able to take the actual current load and that it is executed in a workmanlike manner according to the regulations in force in the country of use.

After the module has been mechanically and electrically connected to the equipment, before starting up the machine the installer must make the electrical measurements according to point 18 of Standard EN 60204-1.

- Open the door of the dishwasher electric box.
- If necessary remove the top panels of the dishwasher and the dryer to make easier the electrical operations.
- Take the coil of wiring cables located in the top part of the drying module and pass it along the top of the dishwasher to the dishwasher electrical box.

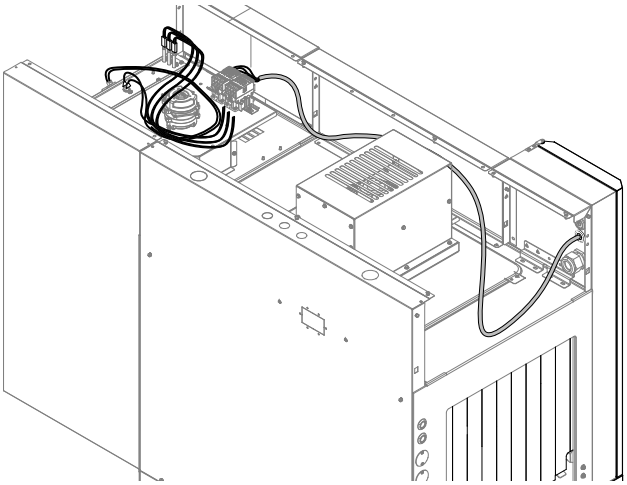

- Pass the wiring cables through the black rubber membrane "A" and connect the power cables "L1", "L2" and "L3" to the terminal board as shown in the picture. Insert the yellow/green ground cable together with those already present.

  Connect the black cable of dryer safety thermostat to the terminal "XT1-15" as shown in the picture.

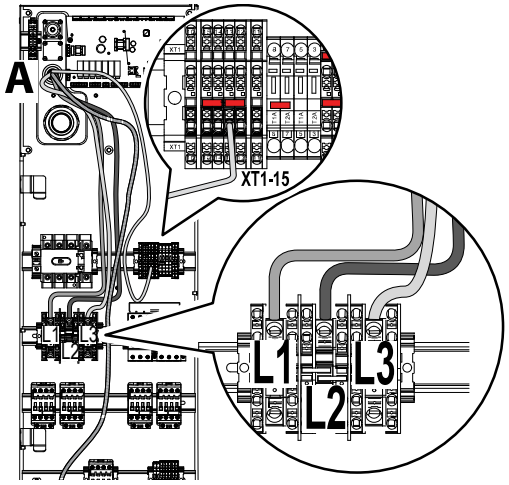

- Take the coil of wiring cables for signal connection of the drying module and connect the connectors in the main dishwasher board. The arrows in the picture show the right position.

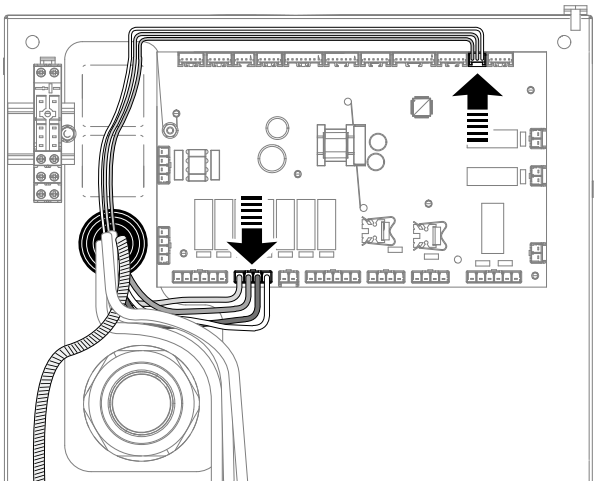

E.14.1 Dryer with door: connect door signal and remove the jumper from terminal board

IMPORTANT
Before to activate the equipment, it is necessary connect the door signal of the dryer module and remove the lower jumper from the dishwasher terminal board “XT1“.

- Open the electrical box of the dishwasher, locate the “XT1“ terminal board;
- connect the door signal of the dryer module to the terminals “XT1-1“ and “XT1-2“ as shown in the picture below;

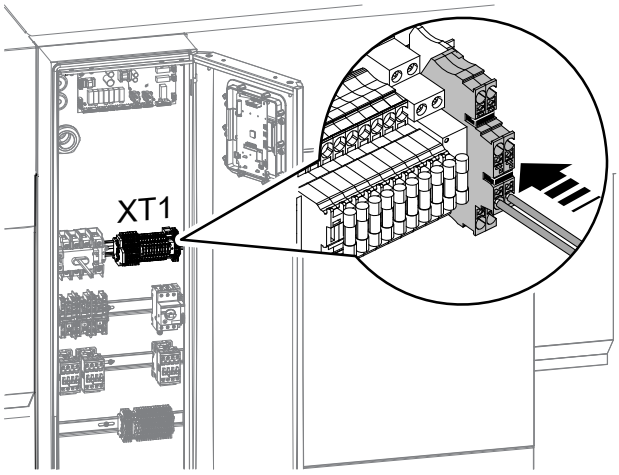

- remove the lower jumper from “XT1“ terminal board.

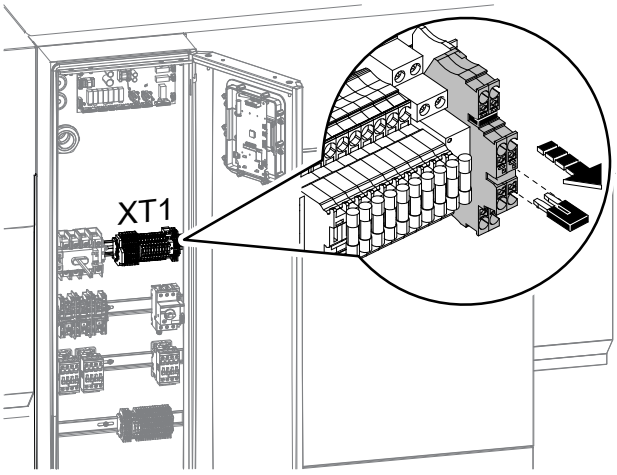

NOTE!
For additional information, refer to the wiring diagram, supplied with the equipment.

E.15 Plumbing connections

IMPORTANT
Watermark labelled appliances must be installed in accordance with Plumbing Code of Australia (PCA).

Install the machine water inlets and drain pipes according to the plumbing circuit and installation diagrams.

Always use a new set of joints if you remove and re-install the water inlet pipe to the machine.

Make sure that there are no visible water leaks.

E.16 Parameter configuration update

Configure the machine parameters according to the service manual. Check if all the parameters are correct.

IMPORTANT
Only Electrolux Professional approved service technician can update the machine parameters after the installation of the drying module.

E.17 Installation wizard

At the first start of the dishwasher or after any additional installation of a new accessories, an automatic procedure checks if all the parameters are properly set.

The “installation wizard“ helps the specialised personnel, step by step, to update all the required machine settings.

IMPORTANT
- Only specialised personnel has the possibility to change machine settings.
- Always refer to the “service manual“ to change or modify machine settings.
- When the machine is in fault due to an error, the display shows the error code and the phone number of the Service Centre. It is important keep the phone number always updated.

E.18 Constructional modifications

The Manufacturer provides for the possibility of connecting the rack-type dishwasher to rack handling systems included in the Electrolux Professional product catalogue, with the possibility of obtaining various configurations. The “EC“ Conformity Declaration provided with the machine also envisages these configurations. The Manufacturer does not provide for the possibility of making other constructional modifications to the machine, but allows the execution of other types of combinations with systems different from those described above (in order to create a series of machines arranged and controlled in an integral way), as illustrated in this documentation. In which case it is necessary to comply with provisions of the applicable European Directives or current regulations in the country of use, and obtain the required certifications. The Manufacturer declines any liability for damage caused by arbitrary modifications and conversions carried out by the user or third parties. For requests or for further information, contact Electrolux Professional SpA - Via Treviso, 15 - 33170 Pordenone - Italy.

E.19 Positioning of emergency switches

If rack handling systems are connected at the infeed or outfeed of a rack-type dishwasher, install on such systems emergency switches that are clearly visible and identifiable and easily accessed by the operator “R“ who must use them.

Described below are possible couplings of dishwashers “L“ with rack handling systems “M“, with the corresponding positions of the emergency switches “E“ and work stations “R“.

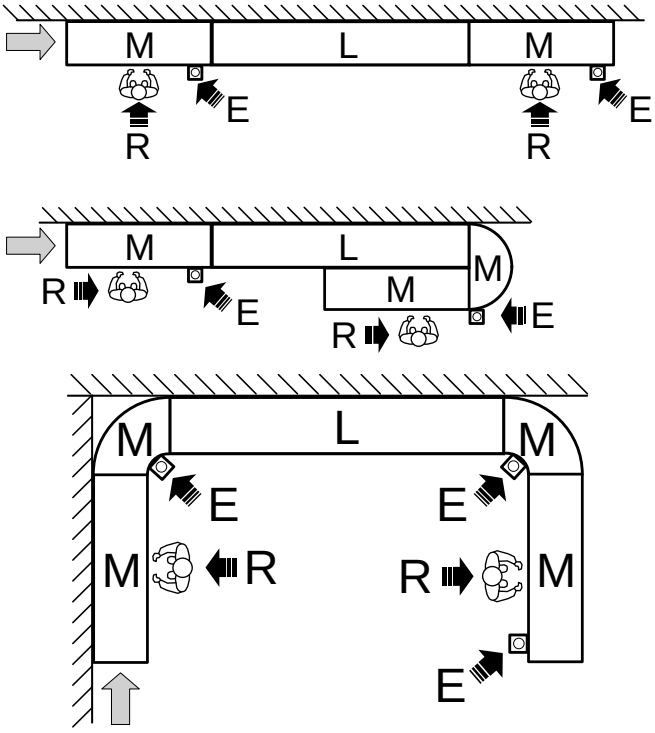

“R“	Operator or work station
“L“	Dishwasher
“M“	Rack handling systems
“E“	Emergency switch

E.19.1 Electrical connection

Proceed as follows to connect the emergency switches to the machine:

1. open the door electrical box;
2. pass the cables for connection through the cable glands “1“ or “2“;
3. connect the emergency switches to:

Emegency switch IN

- XT2–11BEL and XT2–11AB terminal blocks

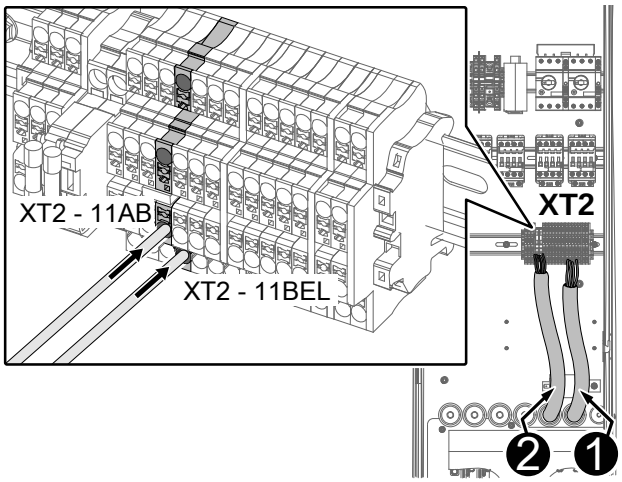

Emegency Switch OUT

- XT2–12BEL and XT2–12AB terminal blocks

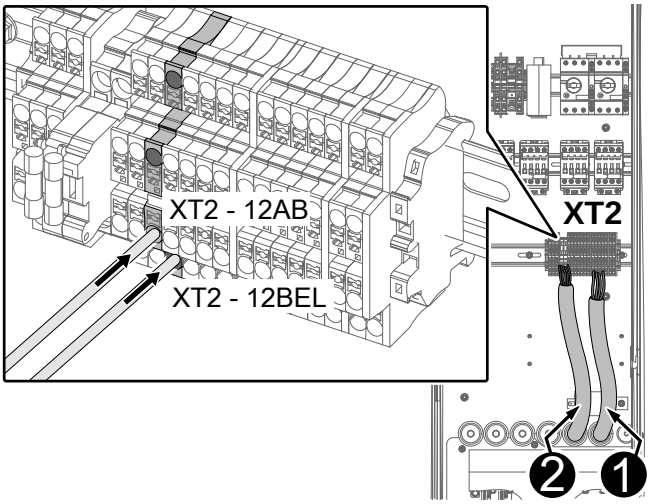

E.20 Emergency stop reinstatement

When an emergency switch is operated, restart the machine only after making sure that:

- the cause requiring operation of the emergency switch has been eliminated;
- restarting machine operation does not involve any hazard.

If the EMERGENCY SWITCH is operated during machine operation, the entire machine is deactivated.

To reinstate machine operation, proceed as follows:

- release the previously operated red emergency button, turning or pulling it in order to disconnect its interlock;
- restart the machine according to what is described in paragraph “***Daily activation***“.

E.21 Fitting curtains

With the machine switched off and cold, fit or refit the curtains as illustrated below.

Drying Tunnel 35”

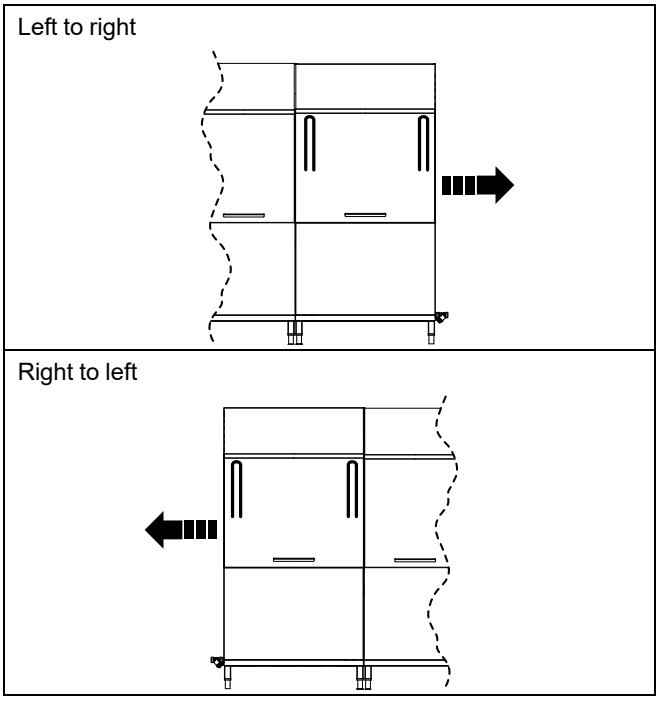

Drying Tunnel 22"

Left to right

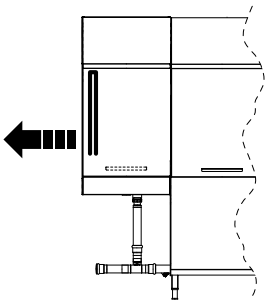

Right to left

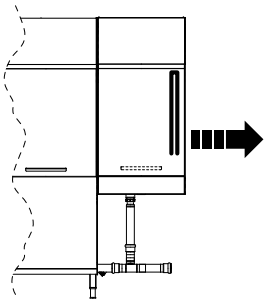

Drying Tunnel 90°

Left to right

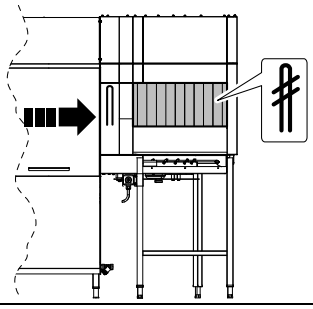

Right to left

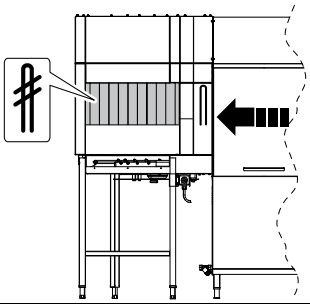

Types of curtains

Double short 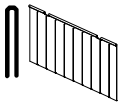	Double short for drying tunnel 90° 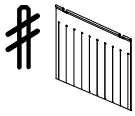
Double long 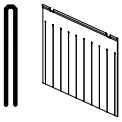	Fasten the curtains with the flat part against the hook 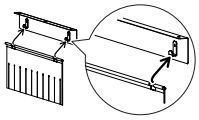

F COMMISSIONING

F.1 Preliminary checks, adjustments and operational tests

Before starting the machine, check:

1. electrical and plumbing connections;
2. positioning of tank components;
3. washing and rinse arms position and fitting;
4. curtains position and fitting.

These operations must only be carried out by specialized technicians provided with adequate personal protection equipment (refer to A.3 *Personal protection equipment*), tools and suitable ancillary equipment with the machine switched off and cold.

F.2 Electrical and plumbing connection

Before starting the machine, check:

1. correct connection of the electrical wires that feed the machine;
2. the power supply voltage and frequency match the data given in the technical data table;
3. correct connection of the water supply and drain pipes;
4. guards, safety devices and emergency switches are in place and properly installed.

F.3 Positioning and fitting of the curtains

Make sure all the types of curtains, provided with the machine, are correctly fitted according to that indicated in paragraph "E.21 *Fitting curtains*".

IMPORTANT
Close the doors of the various appliance modules only when all the parts previously described are correctly installed, then start the machine.

F.4 First starting

1. Open the water supply taps.

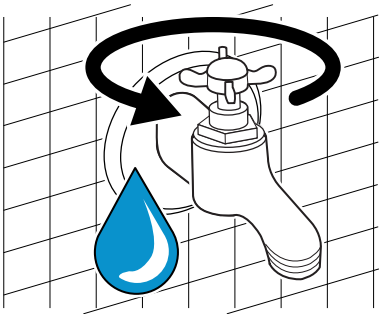

2. Turn the main switch, placed on the door of the electric cabinet, from position "O" to "I" to power the machine.

3. The touch screen switches on and the machine recognizes that one or two dryer modules have been added.
   The display blinks alternatively every second showing the icon of the new module.

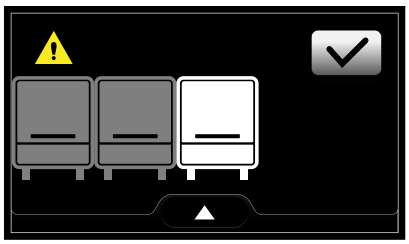

4. Confirm the presence of the new module.

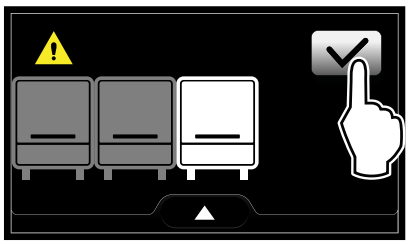

5. The display shows all the available options to select the right type of the new module.

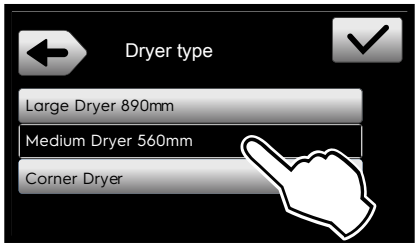

6. Confirm your selection.

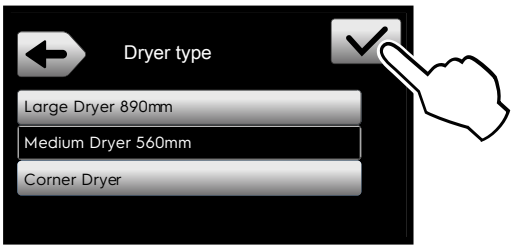

7. Automatically the dishwasher upload all new additional parameters. All the equipment restarts again to make all the updating fixed.
8. When the display shows the ready status, the dishwasher is ready to work.

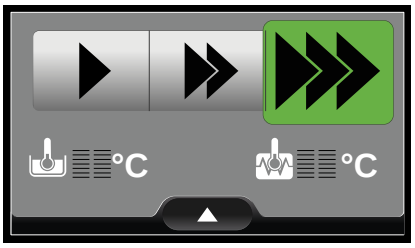

G NORMAL USE

G.1 For additional information, refer to manual supplied with the appliance

NOTE!

If the Installation, User manual or Quick Guide is not available, you can find it in digital format by:

- contacting the dealer or reference customer care;
- downloading the latest and up to date manual on the web site: “www.electroluxprofessional.com“.

CE

Electrolux Professional SPA
Viale Treviso 15
33170 Pordenone
www.electroluxprofessional.com