ALPENINOX

ITEM #

MODEL #

NAME #

SIS #

AIA #

Crio Line HP Refrigerated Counter - 290lt ,1-Door, 2-Drawer

712006 (AH2HBAB) 1-door and 2-drawer refrigerated counter 290L, -2+10°C, (R290), AISI 304

Short Form Specification

Item No.

AISI 304 stainless steel panels, AISI 430 bottom panel, galvanized back panel. Worktop thickness 50mm. Full door and N. 2X1/2 drawers. Built-in refrigeration unit. Operating temperature: -2+10°C. R290 gas in refrigeration circuit. Supplied with 1 grid for each door compartment

APPROVAL:

Main Features

- Preservation performances and temperature uniformity within the cell guaranteed at 5-HEAVY DUTY (40°C) working conditions according to EN16825:2016 test protocol.
- Adjustable temperature range from -2 °C to +10 °C to suit meat, fish and dairy storage requirements.
- Large digital white-digit display with humidity selection button (3 preset level), internal temperature display and setting, manual activation of defrost cycle and turbo frost cycle (to rapidly cool warm loads).
- Tropicalized unit (43°C ambient temperature).
- 0mm clearance installation space: tower configuration cooling unit guarantee performance with frontal ventilation only; this unique solution allows installation against the wall or side by side with other appliances, even on the cooling unit side to maximize the use of kitchen space.
- Combination of doors and drawers to suit any configuration needed, with the possibility to change the configuration on site. Right cooling unit available on request.
- Fully removable cooling unit to facilitate maintenance.
- Frontal and easy access to all components in the cooling unit.
- Fully compliant HACCP digital control: when temperature exceeds critical limits, acoustic and visual alarms are activated. Up to two months of event are kept in memory.
- Anti-tilt runners accept GN 1/1 containers.
- Self closing stainless steel doors (< 90°).
- Certified safety CE requirements.
- Prearranged to fit RS485 port to facilitate connection to a remote computer and integrated HACCP systems.
- Hot gas automatic evaporation of defrost water.
- Connectivity ready for real time access to connected appliances from remote and data monitoring (requires optional accessory).
- Mounted on stainless steel feet to give 150 mm (-5/+50 mm) clearance for ease of cleaning the floor.

Crio Line HP
Refrigerated Counter - 290lt ,1-Door, 2-Drawer

Construction

- Worktop in AISI 304 Stainless steel with a 50 mm profile.
- If needed, working top can be removed for easier handling during installation (in case of narrow doors).
- Anti-drip profile on stainless steel worktop edge.
- Interior base with rounded corners, pressed from a single sheet.
- Ease of cleaning and high hygiene standards thanks to the rounded internal corners, the easily removable runners, grids and air conveyors.
- Internal structure with 15 charging positions (3 cm pitch) available to host GN 1/1 grids, ensuring higher net capacity and a greater storage space.
- Internal and external doors, front and side panels and removable worktop in AISI 304 Stainless steel.
- Built-in refrigeration unit.
- Developed and produced in ISO 9001 and ISO 14001 certified factory.
- Fault code display.
- IP21 protection index.
- Internal dimension of the drawers:
  - models with 2 1/2 drawers: 1st drawer (top drawer) 203x302x521 / 2nd drawer 223x302x521 (HxWxD)
  - models with 3 1/3 drawers: 1st drawer (top drawer) 98x302x521 / 2nd and 3rd drawers 118x302x521 (HxWxD)
  - models with 1/3+2/3 drawers: 1st drawer (top drawer) 98x302x521 / 2nd drawer 333x302x521 (HxWxD)

Sustainability

- CFC and HCFC free, highly ecological refrigerant type: R290 (ecological gas in foam: cyclopentane). Hydrocarbon refrigerant gas R290 for the lowest environmental impact (GWP=3), to reduce green house and ozone depletion effects.
- IQ Defrost - fully automatic defrost starts only when ice is actually building-up in the evaporator and adapts the defrosting duration to guarantee perfect ice removal while optimizing energy efficiency consumption.
- Fitted with 90 mm thickness of cyclopentane insulation for best insulating performance (thermal conductivity: 0,020 W/m*K) and lowest environmental impact (GWP=3).
- Hydrocarbon refrigerant gas R290 for the lowest environmental impact (GWP=3) - CFC and HCFC free.
- Removable triple-chamber balloon magnetic gasket to improve insulation and reduce energy consumption and ease of cleaning.

Included Accessories

• 1 of Kit 1/1GN gray rilsan grid and 2 side runners for refrigerated counters	PNC 881109

Optional Accessories

• 2x1/2-drawer kit refrigerated counter	PNC 881079	❑
• 3x1/3-drawer kit refrigerated counter	PNC 881080	❑
• 1/3 and 2/3 bottle drawer kit for refrigerated counters	PNC 881081	❑
• 1/1GN gray rilsan grid for refrigerated counters	PNC 881107	❑
• 2 side runners for 1/1GN refrigerated counters	PNC 881108	❑
• Kit 1/1GN gray rilsan grid and 2 side runners for refrigerated counters	PNC 881109	❑
• 1/1GN plastic container, h65mm	PNC 881110	❑
• 1/1GN plastic container, h100mm	PNC 881111	❑
• 1/1GN plastic container, h150mm	PNC 881112	❑
• Kit 4 wheels, h100mm (2 with brakes) for refrigerated counters	PNC 881191	❑
• Kit 4 wheels, h150mm (2 with brakes) for 2&3 compartment refrigerated counters	PNC 881193	❑
• Lock for refrigerator/freezer counters with 2 compartments - h700mm	PNC 881242	❑

The company reserves the right to make modifications to the products without prior notice. All information correct at time of printing.

2023.12.06

Crio Line HP
Refrigerated Counter - 290lt ,1-Door, 2-Drawer

Front

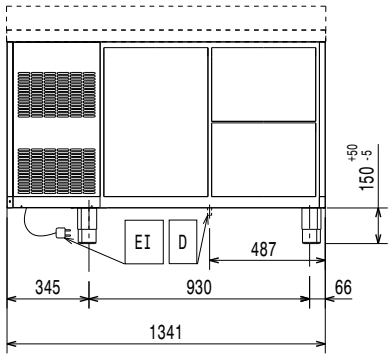

Side

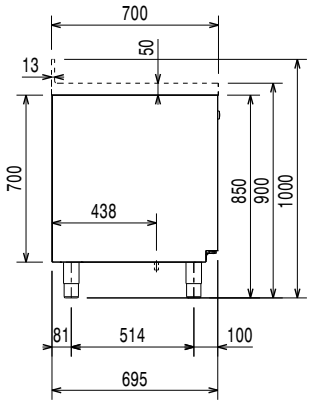

EI = Electrical inlet (power)

Top

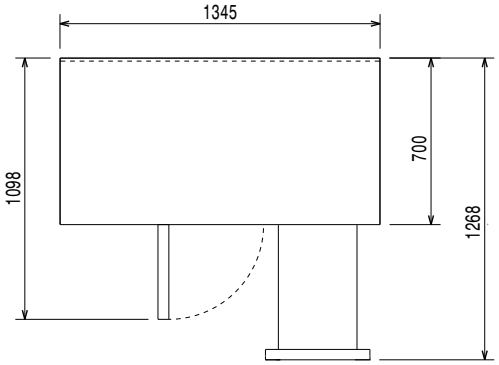

Electric

Supply voltage:	
712006 (AH2HBAB)	220-240 V/1 ph/50 Hz
Electrical power max.:	0.25 kW
Defrost Power:	0.22 kW
Plug type:	CE-SCHUKO

Key Information:

Gross capacity:	290 lt
Net Volume:	149 lt
Door hinges:	Left Side
External dimensions, Width:	1345 mm
External dimensions, Depth:	700 mm
External dimensions, Height:	900 mm
Internal Dimensions, Width:	798 mm
Internal Dimensions, Depth:	560 mm
Internal Dimensions, Height:	550 mm
Net weight:	112 kg
Shipping volume:	1.13 m³
Depth with doors open:	1110 mm
Height adjustment:	-5/50 mm

Refrigeration Data

Control type:	Digital
Compressor power:	1/4 hp
Refrigeration power at evaporation temperature:	-10 °C
Min/Max internal humidity:	40/85
Operating temperature min.:	-2 °C
Operating temperature max.:	10 °C
Operating mode:	Ventilated

Sustainability

Current consumption:	1.8 Amps
Energy Class (EU Reg. 2015/1094):	B
Yearly and daily energy consumption (EU Reg. 2015/1094):	630kWh/year - 2kWh/24h
Climate class (EU Reg. 2015/1094):	Heavy Duty (5)
Energy Efficiency Index-EEI (EU Reg. 2015/1094):	29,02
Refrigerant type:	R290
GWP Index:	3
Refrigeration power:	320 W
Refrigerant weight:	70 g

The company reserves the right to make modifications to the products without prior notice. All information correct at time of printing.

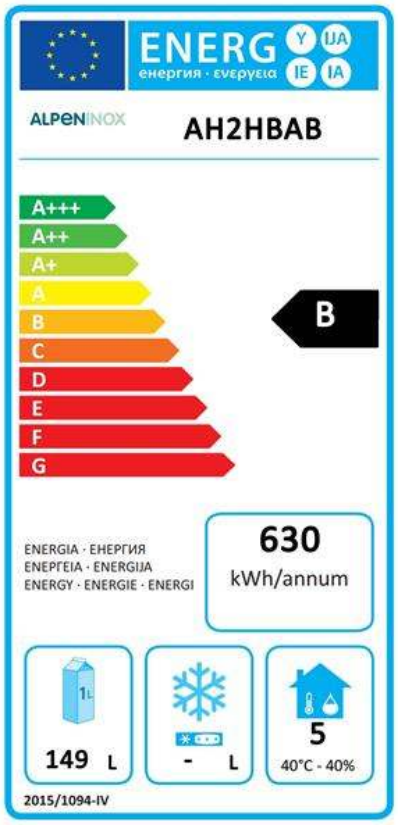

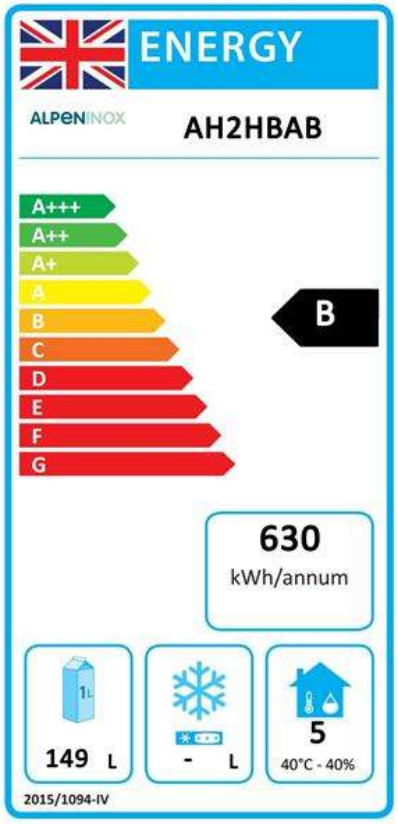

EU energy labelling from 1st July 2016

The European energy labelling scheme for professional refrigerators and freezers is based on requirements setting Minimum Energy Performance standards for commercial refrigeration cabinets sold within the EU.These requirements are designed to drive energy efficiency and environmentally friendly approach for professionals.The European energy labelling scheme will apply to all manufacturers and importers who sell and market products within the EU and it is mandatory across Europe. Important: all products which consume energy above the minimum level will not be able to be sold within the EU from 1 July 2016.

SI 2020 No. 1528.

Important: all products which consume energy above the minimum level will not be able to be sold within the EU from 1 July 2016.

The company reserves the right to make modifications to the products without prior notice. All information correct at time of printing.

2023.12.06