ITEM #

MODEL #

NAME #

SIS #

AIA #

Planetary Mixers
Planetary Mixer, 10 lt. - Mechanical



600141 (DXBM10B) — 10 lt planetary mixer, bowl detection device, mechanical speed variation. Equipped with spiral hook, paddle and whisk. Equipped with highly resistant safety screen - BPA free

Short Form Specification

Item No.

Suitable for all kneading, blending and whipping operations. Body, feet and 10 litre capacity bowl in stainless steel. Powerful asynchronous motor (500 W) with mechanical speed variator (8 speed levels from 30 to 170 rpm). Water protected planetary system. Removable/ transparent solid safety screen - made of a bisphenol-A free (BPA) copolyester. Water proof (IP55) and flat touch button control panel with 60 min. timer. Bowl detection device allows the mixer to switch on only when the bowl and the safety screen are properly installed and positioned together. Adjustable feet for stability. Supplied with 3 tools: spiral hook, paddle and whisk.

APPROVAL:

Main Features

- Professional beater mixer that provides all the basic mixer functions: kneading of all sort of pastes, mixing of semi-liquid products, emulsions and various sauces.
- Bowl detection device allows the mixer to switch on only when the bowl and the solid safety screen are properly installed and positioned together.
- Maximum capacity (flour, with 60% of hydration) 3.5 kg, suitable for 10-50 meals per service.
- Removable safety screen activates the raising and lowering of the bowl.
- Mechanical speed variator.
- Delivered with: - Spiral Hook, Paddle, Wire Whisk and Mixing Bowl for 10 lt

Construction

- Sturdy construction with mechanically welded strong metal frame.
- Compact design for table top installations.
- Adjustable feet for perfect stability.
- Body entirely in stainless steel.
- Asynchronous motor with high start-up torque.
- Power: 500 Watts.
- Planetary movement based on self lubricating gears, eliminating any risk of leaks.
- Water protected planetary system (IP55 electrical controls, IP34 appliance overall).
- 8 speeds, from 30 to 170 rpm, to be lever operated while the machine is working, according to the tool and the mixture hardness.
- AISI 302 stainless steel bowl - 10 lt. capacity.
- Waterproof touch button control panel with timer setting, display and pulse function.

Included Accessories

• 1 of Paddle 10 lt	PNC 653267
• 1 of Spiral Hook 10 lt	PNC 653268
• 1 of Whisk 10 lt	PNC 653269
• 1 of Bowl 10 lt	PNC 653276

Optional Accessories

• Paddle 10 lt	PNC 653267 ❑
• Spiral Hook 10 lt	PNC 653268 ❑
• Whisk 10 lt	PNC 653269 ❑
• Bowl 10 lt	PNC 653276 ❑

Planetary Mixers
Planetary Mixer, 10 lt. - Mechanical

Front

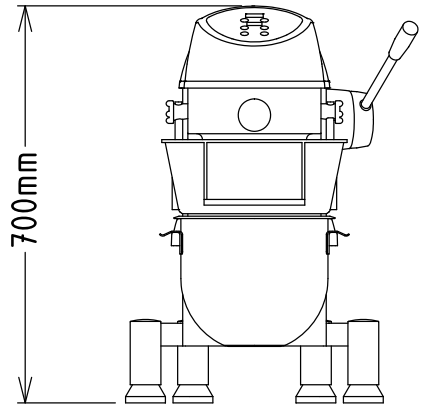

Side

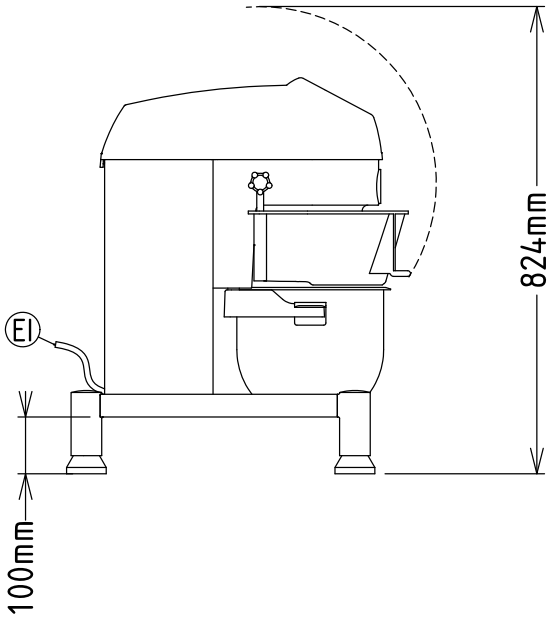

EI = Electrical inlet (power)

Top

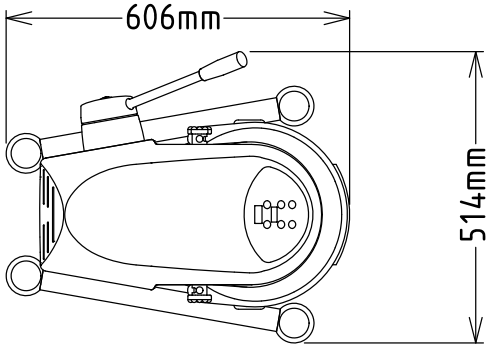

Electric

Supply voltage:	380-415 V/3 ph/50 Hz
Electrical power, max:	0.5 kW
Total Watts:	0.5 kW

Capacity:

Performance (up to):	3.5 kg/Cycle
Capacity:	10 litres

Key Information:

External dimensions, Width:	454 mm
External dimensions, Depth:	606 mm
External dimensions, Height:	700 mm
Shipping weight:	57 kg
Net weight (kg):	45
Cold water paste:	3.5 kg with Spiral hook
Egg whites:	18 with Whisk

The company reserves the right to make modifications to the products without prior notice. All information correct at time of printing.

2026.11.19