ITEM #

MODEL #

NAME #

SIS #

AIA #

Planetary Mixers
Planetary Mixer, 10 lt. - Electronic



600142 (DXBE10B)

10 lt planetary mixer, bowl detection device, electronic speed variation. Equipped with spiral hook, paddle and whisk. Equipped with highly resistant safety screen - BPA free

Short Form Specification

Item No.

Suitable for all kneading, blending and whipping operations. Body, feet and 10 litre capacity bowl in stainless steel. One piece alloy head holding the planetary mechanism and the drive. Water proof (IP55) and flat touch button control panel with 60 min. timer. Removable/ transparent solid safety screen - made of a bisphenol-A free (BPA) copolyester. Powerful asynchronous motor (750 W) with electronic speed variation adjusted by a potentiometer (10 speed levels from 26 to 180 rpm). Bowl detection device allows the mixer to switch on only when the bowl and the safety screen are properly installed and positioned together. Adjustable feet for stability.
Supplied with 3 tools: spiral hook, paddle and whisk.

APPROVAL:

Main Features

- Professional beater mixer that provides all the basic mixer functions: kneading of all sort of pastes, mixing of semi-liquid products, emulsions and various sauces.
- Delivered with: - Spiral Hook, Paddle, Wire Whisk and Mixing Bowl for 10 lt
- Electronic speed variator.
- Removable safety screen activates the raising and lowering of the bowl.
- Maximum capacity (flour, with 60% of hydration) 3.5 kg, suitable for 10-50 meals per service.
- Bowl detection device allows the mixer to switch on only when the bowl and the solid safety screen are properly installed and positioned together.

Construction

- Compact design for table top installations.
- Body entirely in stainless steel.
- Sturdy construction with mechanically welded strong metal frame.
- AISI 302 stainless steel bowl - 10 lt. capacity.
- Asynchronous motor with high start-up torque.
- Planetary movement based on self lubricating gears, eliminating any risk of leaks.
- 10 speeds from 26 to 180 rpm (planetary movement), to adjust to the selected tool and mixture hardness.
- Water protected planetary system (IP55 electrical controls, IP34 appliance overall).
- Power: 750 watts.
- Adjustable feet for perfect stability.

Included Accessories

• 1 of Paddle 10 lt	PNC 653267
• 1 of Spiral Hook 10 lt	PNC 653268
• 1 of Whisk 10 lt	PNC 653269
• 1 of Bowl 10 lt	PNC 653276

Optional Accessories

• Paddle 10 lt	PNC 653267 ❑
• Spiral Hook 10 lt	PNC 653268 ❑
• Whisk 10 lt	PNC 653269 ❑
• Bowl 10 lt	PNC 653276 ❑

Planetary Mixers
Planetary Mixer, 10 lt. - Electronic

Front

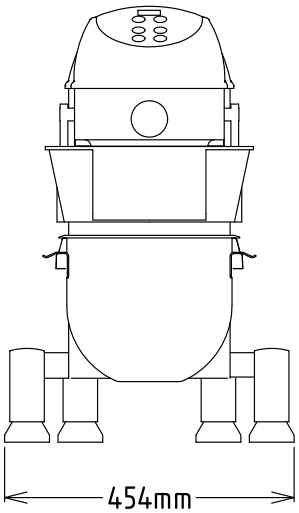

Side

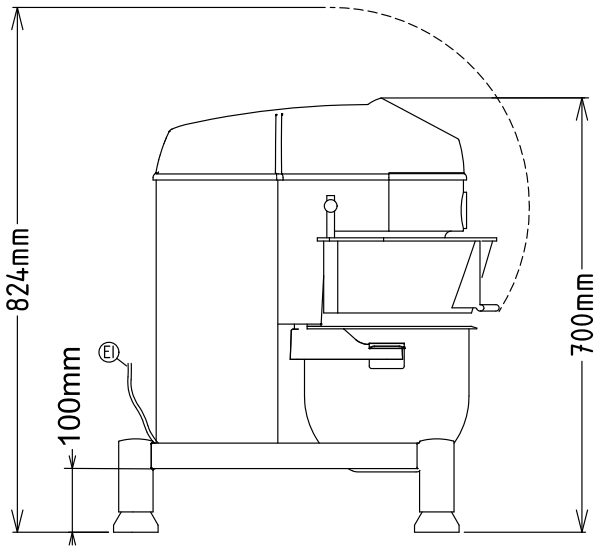

EI = Electrical inlet (power)

Top

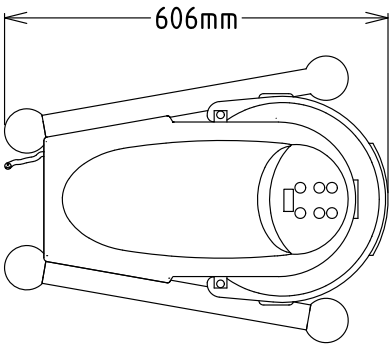

Electric	
Supply voltage:	200-240 V/1N ph/50/60 Hz
Electrical power, max:	0.75 kW
Total Watts:	0.75 kW
Capacity:	
Performance (up to):	3.5 kg/Cycle
Capacity:	10 litres
Key Information:	
External dimensions, Width:	454 mm
External dimensions, Depth:	606 mm
External dimensions, Height:	700 mm
Shipping weight:	48 kg
Net weight (kg):	37
Cold water paste:	3.5 kg with Spiral hook
Egg whites:	18 with Whisk

The company reserves the right to make modifications to the products without prior notice. All information correct at time of printing.

2026.11.18