ITEM #

MODEL #

NAME #

SIS #

AIA #

Food Processor PREP4YOU Cutter Mixer 2,6 Lt - Single Speed



600959 (DK26) Cutter mixer 2.6 lt with stainless steel bowl, 1500 rpm, Schuko plug

Short Form Specification

Item No.

Table top Cutter Mixer. 2,6 litres, stainless steel bowl with scraper and central feed hole for adding products in mid-cycle. Transparent copolyester lid. Microtoothed blade rotor. Angled blades and conical base of the bowl ensure consistent mixing. All ingredients are processed evenly and quickly thanks to a special flow generated inside the bowl. No-volt release system prevents accidental start of the appliance. All parts in contact with food are removable and Dishwasher safe. Waterproof, easy to clean, flat, soft-touch buttons. Single speed 1500 rpm with on/pulse/off function for simple operations. With Schuko plug.

APPROVAL:

Main Features

- Tabletop cutter mixer and emulsifier allowing fast chopping, mixing, mincing, griding, liquidizing and kneading.
- Includes 2,6 liter stainless steel bowl with micro-toothed blades rotor.
- Bowl/lid scraper included for uniform smooth results (emulsifying) and continuous working.
- Transparent lid, with funnel shaped hole, to add ingredients during use.
- All ingredients are processed evenly and quickly thanks to a special movement generated inside the bowl.
- Easy to clean and waterproof control panel with flat on/off button and pulse function.
- Pulse function for coarse chopping.
- All parts in contact with food are removable without the use of tools, completely dismountable and dishwasher safe.
- Productivity up to 50 settings per service.

Construction

- 1 speed: 1.500 rpm.
- Power: 500 Watts.
- Bowl in AISI 304 stainless steel.
- Micro-toothed blades in 420 AISI stainless steel and ergonomic scraper in resistant composite material to ensure consistent mixing.
- compact design, easy to move and store.
- IPX5 (IP55) waterproof, flat, touch-control panel.
- Main switch ON/OFF on the back of the appliance.
- Asynchronous industrial motor with no brushes for high reliability and quiet functioning, stainless steel motor shaft.
- Food safety assured in accordance to European directives and UK legislation. In addition, materials in contact with food, are BPA-free.
- Product safety conform to European directives, UK legislation and international health and safety standards.

Included Accessories

- 1 of Transparent lid for 2,6lt cutter mixer bowl PNC 650117
- 1 of Microtoothed blade rotor for 2.6lt Cutter Mixer PNC 650226
- 1 of Stainless steel bowl for 2,6lt Cutter Mixer PNC 650228
- 1 of Scraper for 2.6lt Cutter Mixer bowl PNC 650230

Optional Accessories

- Transparent lid for 2,6lt cutter mixer bowl PNC 650117 ❑
- Transparent lid without sealing for 3,6lt Cutter Mixer bowl (1 speed models) PNC 650118 ❑
- Microtoothed blade rotor for 2.6lt Cutter Mixer PNC 650226 ❑
- Smooth blade rotor for 2.6lt Cutter Mixer PNC 650227 ❑
- Stainless steel bowl for 2,6lt Cutter Mixer PNC 650228 ❑
- Transparent copolyester bowl for 2,6lt Cutter Mixer PNC 650229 ❑
- Scraper for 2.6lt Cutter Mixer bowl PNC 650230 ❑
- Stainless steel bowl for 2,6lt Cutter Mixer, microtoothed rotor, lid with scraper PNC 650231 ❑
- Microtoothed blade rotor for 3.6lt Cutter Mixer PNC 650233 ❑
- Smooth blade rotor for 3.6lt Cutter Mixer PNC 650234 ❑
- Stainless steel bowl for 3.6lt Cutter Mixer PNC 650235 ❑
- Scraper for 3.6lt Cutter Mixer bowl PNC 650236 ❑
- Transparent bowl for 2,6lt cutter mixer, microtoothed rotor, lid with scraper PNC 650245 ❑

The company reserves the right to make modifications to the products without prior notice. All information correct at time of printing.

Food Processor
PREP4YOU Cutter Mixer 2,6 Lt - Single Speed

Front

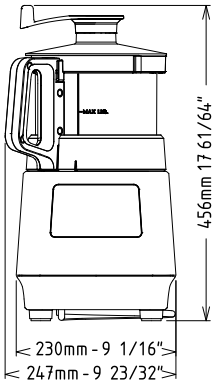

Side

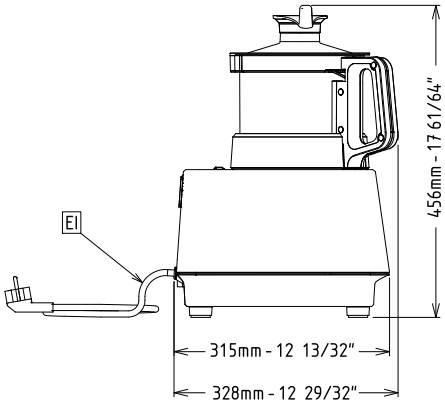

EI = Electrical inlet (power)

Top

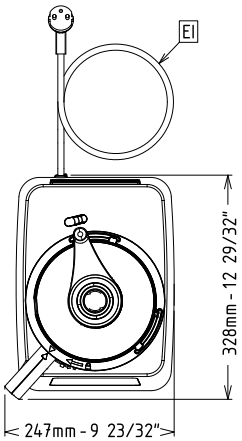

Electric	
Supply voltage:	220-240 V/1N ph/50 Hz
Electrical power, max:	0.5 kW
Total Watts:	0.5 kW
Capacity:	
Performance (up to):	0 kg/Cycle
Capacity:	2.6 litres
Key Information:	
External dimensions, Width:	247 mm
External dimensions, Depth:	328 mm
External dimensions, Height:	456 mm
Shipping weight:	15.7 kg
Meat mincing capacity:	0 kg
Mayonnaise preparation capacity:	0 kg
Pastry preparation capacity:	0 kg

The company reserves the right to make modifications to the products without prior notice. All information correct at time of printing.

2026.11.24