ITEM #

MODEL #

NAME #

SIS #

AIA #

# Food Processor PREP4YOU Cutter Mixer 2,6 Lt - Single Speed - UK plug



**600961 (DK26G)** Cutter mixer 2.6 lt with stainless steel bowl, 1500 rpm, UK plug

## Short Form Specification

Item No.

Table top cutter mixer. 2,6 litres, stainless steel bowl with scraper and central feed hole for adding products in mid-cycle. Transparent copolyester lid. Microtoothed blade rotor. Angled blades and conical base of the bowl ensure consistent mixing. All ingredients are processed evenly and quickly thanks to a special flow generated inside the bowl. No-volt release system prevents accidental start of the appliance. All parts in contact with food are removable and Dishwasher safe. Waterproof, easy to clean, flat, soft-touch buttons. Single speed 1500 rpm with on/pulse/off function for simple operations. With UK plug.

## Main Features

- Tabletop cutter mixer and emulsifier allowing fast chopping, mixing, mincing, griding, liquidizing and kneading.
- Includes 2,6 liter stainless steel bowl with micro-toothed blades rotor.
- Bowl/lid scraper included for uniform smooth results (emulsifying) and continuous working.
- Transparent lid, with funnel shaped hole, to add ingredients during use.
- All ingredients are processed evenly and quickly thanks to a special movement generated inside the bowl.
- Easy to clean and waterproof control panel with flat on/off button and pulse function.
- Pulse function for coarse chopping.
- All parts in contact with food are removable without the use of tools, completely dismountable and dishwasher safe.
- Productivity up to 50 settings per service.

## Construction

- 1 speed: 1.500 rpm.
- Power: 500 Watts.
- Bowl in AISI 304 stainless steel.
- Micro-toothed blades in 420 AISI stainless steel and ergonomic scraper in resistant composite material to ensure consistent mixing.
- compact design, easy to move and store.
- IPX5 (IP55) waterproof, flat, touch-control panel.
- Main switch ON/OFF on the back of the appliance.
- Asynchronous industrial motor with no brushes for high reliability and quiet functioning, stainless steel motor shaft.
- Food safety assured in accordance to European directives and UK legislation. In addition, materials in contact with food, are BPA-free.
- Product safety conform to European directives, UK legislation and international health and safety standards.

APPROVAL:

## Included Accessories

- 1 of Transparent lid for 2,6lt cutter mixer bowl — PNC 650117
- 1 of Microtoothed blade rotor for 2.6lt Cutter Mixer — PNC 650226
- 1 of Stainless steel bowl for 2,6lt Cutter Mixer — PNC 650228
- 1 of Scraper for 2.6lt Cutter Mixer bowl — PNC 650230

## Optional Accessories

- Transparent lid for 2,6lt cutter mixer bowl — PNC 650117 ❑
- Transparent lid without sealing for 3,6lt Cutter Mixer bowl (1 speed models) — PNC 650118 ❑
- Microtoothed blade rotor for 2.6lt Cutter Mixer — PNC 650226 ❑
- Smooth blade rotor for 2.6lt Cutter Mixer — PNC 650227 ❑
- Stainless steel bowl for 2,6lt Cutter Mixer — PNC 650228 ❑
- Transparent copolyester bowl for 2,6lt Cutter Mixer — PNC 650229 ❑
- Scraper for 2.6lt Cutter Mixer bowl — PNC 650230 ❑
- Stainless steel bowl for 2,6lt Cutter Mixer, microtoothed rotor, lid with scraper — PNC 650231 ❑
- Microtoothed blade rotor for 3.6lt Cutter Mixer — PNC 650233 ❑
- Smooth blade rotor for 3.6lt Cutter Mixer — PNC 650234 ❑
- Stainless steel bowl for 3.6lt Cutter Mixer — PNC 650235 ❑
- Scraper for 3.6lt Cutter Mixer bowl — PNC 650236 ❑
- Transparent bowl for 2,6lt cutter mixer, microtoothed rotor, lid with scraper — PNC 650245 ❑



The company reserves the right to make modifications to the products without prior notice. All information correct at time of printing.

# Food Processor
# PREP4YOU Cutter Mixer 2,6 Lt - Single Speed - UK plug

Front

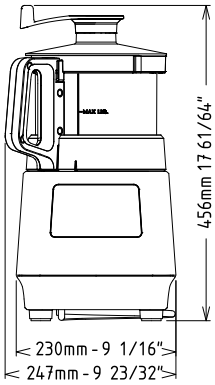


Side

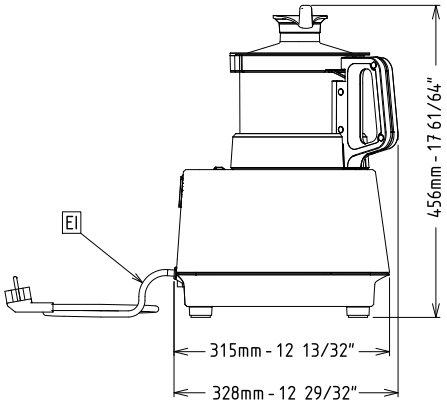


**EI** = Electrical inlet (power)

Top

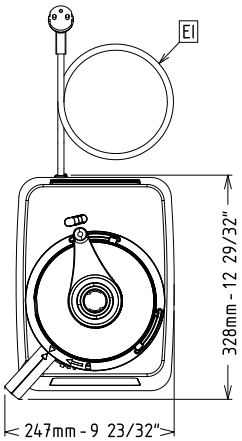


| | |
|---|---|
| **Electric** | |
| **Supply voltage:** | 220-240 V/1N ph/50 Hz |
| **Electrical power, max:** | 0.5 kW |
| **Total Watts:** | 0.5 kW |
| **Capacity:** | |
| **Performance (up to):** | 0 kg/Cycle |
| **Capacity:** | 2.6 litres |
| **Key Information:** | |
| **External dimensions, Width:** | 247 mm |
| **External dimensions, Depth:** | 328 mm |
| **External dimensions, Height:** | 456 mm |
| **Shipping weight:** | 18 kg |
| **Meat mincing capacity:** | 0 kg |
| **Mayonnaise preparation capacity:** | 0 kg |
| **Pastry preparation capacity:** | 0 kg |



The company reserves the right to make modifications to the products without prior notice. All information correct at time of printing.

2026.11.24