ITEM #

MODEL #

NAME #

SIS #

AIA #

Vegetable Slicer
PREP4YOU Vegetable Slicer - 1 Speed - No discs included



600970 (DVS) Vegetable Slicer with 1500 rpm, Schuko plug

Short Form Specification

Item No.

Vegetable slicer ensures consistent cutting results thanks to the design patented lever-pusher. Constructed in a sturdy plastic material. 1,25 liters transparent half-moon hopper. Vegetables can be fed directly into the half moon hopper, a pusher presses the vegetables against the cutting discs ensuring an even cut in minimal time. 2 small hoppers for precise cuts on long vegetables dia. 55mm or 25mm. Ideal for grating, slicing/wavy slice, julienne and dicing. A safety micro switch stops the blade when the feed hopper is opened. No-volt release system prevents accidental start of the appliance. All parts in contact with food are removable and Dishwasher safe. Single speed 1500 rpm with on/pulse/off function for simple operations. With Schuko plug.

APPROVAL:

Main Features

- Vegetable slicer with slicing, grating, shredding (julienne) as well as dicing and French fries cutting capability.
- Continuous feed model.
- Equipped with half moon hopper (1,25lt capacity) and 2 small round feed chutes: Ø 25mm and Ø 55mm, for precise slicing of long shaped vegetables.
- Uniform cuts and maximised load capacity, thanks to the design patented lever-pusher.
- Large output chute for efficient ejection. Fits up to 200mm high standard kitchen containers (like GN) under the output chute.
- Pulse function for quick and precise slicing and grating.
- Ergonomical frontal lever, suitable for left handed and right handed operators.
- Vegetable slicer blade stops when lever pusher is lifted for operator safety.
- Optional discs and grids available of various sizes for slicing, dicing, grating and shredding (diam. 175mm).
- All parts in contact with food are removable without the use of tools, completely dismountable and dishwasher safe.
- Easy to clean and waterproof control panel with flat on/off button and pulse function.
- Productivity up to 100 settings per service.

Construction

- 1 speed: 1.500 rpm.
- Power: 500 Watts.
- compact design, easy to move and store.
- IPX5 (IP55) waterproof, flat, touch-control panel.
- Main switch ON/OFF on the back of the appliance.
- Asynchronous industrial motor with no brushes for high reliability and quiet functioning, stainless steel motor shaft.
- Food safety assured in accordance to European directives and UK legislation. In addition, materials in contact with food, are BPA-free.
- Product safety conform to European directives, UK legislation and international health and safety standards.

Vegetable Slicer
PREP4YOU Vegetable Slicer - 1 Speed - No discs included

Included Accessories

- 1 of Ejector for Vegetable Slicer PNC 650232

Optional Accessories

- Cleaning tool for TRS, TRK & TR210 5-8-10 mm dicing grids PNC 650110 ❑
- Set of 3 discs dia. 175mm (slicer 2mm, slicer 5mm, grater 3mm) PNC 650196 ❑
- Set of 6 discs dia. 175mm (slicer 2mm, slicer 5mm, grater 3mm, grater 7mm, slicer 10mm, grid 10x10mm) PNC 650197 ❑
- Stainless steel grating disc 2 mm (dia. 175mm) PNC 650198 ❑
- Stainless steel grating disc 3 mm (dia. 175mm) PNC 650199 ❑
- Stainless steel grating disc 4 mm (dia. 175mm) PNC 650205 ❑
- Stainless steel grating disc 7 mm (dia. 175mm) PNC 650207 ❑
- Parmesan Disc PNC 650208 ❑
- Stainless steel shredding disc 2 mm (dia. 175mm) PNC 650209 ❑
- Stainless steel shredding disc 4 mm (dia. 175mm) PNC 650210 ❑
- Stainless steel shredding disc 8 mm for French fries (dia. 175mm) PNC 650211 ❑
- Stainless steel slicing disc 1 mm (dia. 175mm) PNC 650213 ❑
- Stainless steel slicing disc 2 mm (dia. 175mm) PNC 650214 ❑
- Stainless steel slicing disc 3 mm (dia. 175mm) PNC 650215 ❑
- Stainless steel slicing disc 5 mm (dia. 175mm) PNC 650216 ❑
- Stainless steel slicing disc 6 mm (dia. 175mm) PNC 650217 ❑
- Stainless steel wavy slicing disc 3 mm (dia. 175mm) PNC 650218 ❑
- Stainless steel wavy slicing disc 5 mm (dia. 175mm) PNC 650219 ❑
- Aluminum slicing disc 8 mm (dia. 175mm) PNC 650220 ❑
- Aluminum slicing disc 10 mm (dia. 175mm) PNC 650221 ❑
- Dicing grid 8x8 (dia 175mm) PNC 650222 ❑
- Dicing grid 10x10 (dia 175mm) PNC 650223 ❑
- Dicing kit 8mm (aluminum slicer 8mm, grid 8x8mm) (dia. 175mm) PNC 650224 ❑
- Dicing kit 10mm (aluminum slicer 10mm, grid 10x10 mm) (dia. 175mm) PNC 650225 ❑
- Ejector for Vegetable Slicer PNC 650232 ❑
- Stainless steel slicing disc 4 mm (dia. 175mm) PNC 650237 ❑
- Support for 1 disc, diam. 175mm and 205mm PNC 653632 ❑

The company reserves the right to make modifications to the products without prior notice. All information correct at time of printing.

2026.11.20

Vegetable Slicer
PREP4YOU Vegetable Slicer - 1 Speed - No discs included

Front

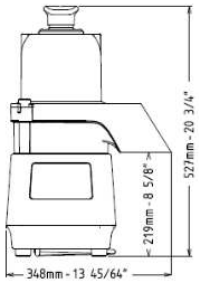

Side

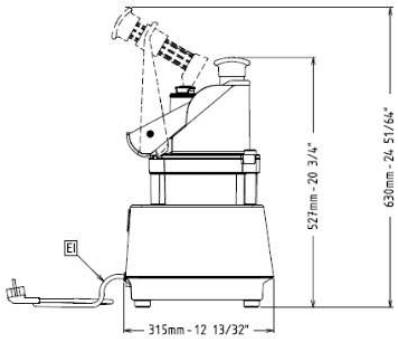

EI = Electrical inlet (power)

Top

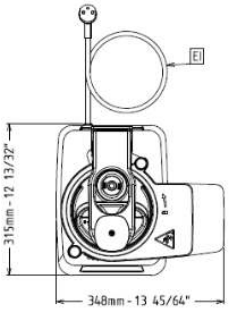

Electric	
Supply voltage:	220-240 V/1N ph/50 Hz
Electrical power, max:	0.5 kW
Total Watts:	0.5 kW
Capacity:	
Performance (up to):	150 kg/Cycle
Key Information:	
External dimensions, Width:	348 mm
External dimensions, Depth:	315 mm
External dimensions, Height:	527 mm
Shipping weight:	16.6 kg

The company reserves the right to make modifications to the products without prior notice. All information correct at time of printing.

2026.11.20