ITEM #

MODEL #

NAME #

SIS #

AIA #

# Vegetable Slicer PREP4YOU Combined Vegetable Slicer/Cutter Mixer 2,6 Lt - Single Speed - No discs included



**600974 (DCOM26)**

Combined vegetable slicer and cutter mixer 2.6 lt, with stainless steel bowl, 1500 rpm, Schuko plug

## Short Form Specification

Item No.

Combined Vegetable Slicer and Cutter Mixer with 2,6 litres, stainless steel bowl. Vegetable slicer ensures consistent cutting results thanks to the design patented lever-pusher. Constructed in a sturdy plastic material. 1,25 liters transparent half-moon hopper. Vegetables can be fed directly into the half moon hopper, a pusher presses the vegetables against the cutting discs ensuring an even cut in minimal time. 2 small hoppers for precise cuts on long vegetables dia. 55mm or 25mm. Ideal for grating, slicing/wavy slice, julienne and dicing. A safety micro switch stops the blade when the feed hopper is opened.
Cutter Mixer transparent copolyester lid with scraper and central feed hole for adding products in mid-cycle. Microtoothed blade rotor. Angled blades and conical base of the bowl ensure consistent mixing. All ingredients are processed evenly and quickly thanks to a special flow generated inside the bowl.
No-volt release system prevents accidental start of the appliance. All parts in contact with food are removable and Dishwasher safe. Waterproof, easy to clean, flat, soft-touch buttons. Single speed 1500 rpm with on/pulse/off function for simple operations. With Schuko plug.

## Main Features

- Combined appliance with two functions: vegetable slicer and cutter mixer.
- Equipped with vegetable slicer attachment for slicing, grating, shredding (julienne) as well as dicing and French fries cutting.
- Cutter mixer and emulsifier function included, for fast chopping, mixing, mincing, griding, liquidizing and kneading.
- Equipped with half moon hopper (1,25lt capacity) and 2 small round feed chutes: Ø 25mm and Ø 55mm, for precise slicing of long shaped vegetables.
- Uniform cuts and maximised load capacity, thanks to the design patented lever-pusher.
- Large output chute for efficient ejection. Fits up to 200mm high standard kitchen containers (like GN) under the output chute.
- Continuous feed model.
- Pulse function for quick and precise slicing and grating.
- Ergonomical frontal lever, suitable for left handed and right handed operators.
- Vegetable slicer blade stops when lever pusher is lifted for operator safety.
- Optional discs and grids available of various sizes for slicing, dicing, grating and shredding (diam. 175mm).
- Includes 2,6 liter stainless steel bowl with micro-toothed blades rotor.
- Bowl/lid scraper included for uniform smooth results (emulsifying) and continuous working.
- Transparent lid, with funnel shaped hole, to add ingredients during use.
- All ingredients are processed evenly and quickly thanks to a special movement generated inside the bowl.
- Pulse function for coarse chopping.
- Easy to clean and waterproof control panel with flat on/off button and pulse function.
- All parts in contact with food are removable without the use of tools, completely dismountable and dishwasher safe.
- Productivity: up to 100 settings per service for vegetable slicer, up to 50 settings per service for cutter mixer function.

APPROVAL:



Vegetable Slicer PREP4YOU Combined Vegetable Slicer/Cutter Mixer 2,6 Lt - Single Speed - No discs included

## Construction

- 1 speed: 1.500 rpm.
- Power: 500 Watts.
- Bowl in AISI 304 stainless steel.
- Micro-toothed blades in 420 AISI stainless steel and ergonomic scraper in resistant composite material to ensure consistent mixing.
- IPX5 (IP55) waterproof, flat, touch-control panel.
- Main switch ON/OFF on the back of the appliance.
- Asynchronous industrial motor with no brushes for high reliability and quiet functioning, stainless steel motor shaft.
- Food safety assured in accordance to European directives and UK legislation. In addition, materials in contact with food, are BPA-free.
- Product safety conform to European directives, UK legislation and international health and safety standards.

## Included Accessories

- 1 of Transparent lid for 2,6lt cutter mixer bowl PNC 650117
- 1 of Microtoothed blade rotor for 2.6lt Cutter Mixer PNC 650226
- 1 of Stainless steel bowl for 2,6lt Cutter Mixer PNC 650228
- 1 of Scraper for 2.6lt Cutter Mixer bowl PNC 650230
- 1 of Ejector for Vegetable Slicer PNC 650232

## Optional Accessories

- Cleaning tool for TRS, TRK & TR210 5-8-10 mm dicing grids PNC 650110 ❑
- Transparent lid for 2,6lt cutter mixer bowl PNC 650117 ❑
- Transparent lid without sealing for 3,6lt Cutter Mixer bowl (1 speed models) PNC 650118 ❑
- Set of 3 discs dia. 175mm (slicer 2mm, slicer 5mm, grater 3mm) PNC 650196 ❑
- Set of 6 discs dia. 175mm (slicer 2mm, slicer 5mm, grater 3mm, grater 7mm, slicer 10mm, grid 10x10mm) PNC 650197 ❑
- Stainless steel grating disc 2 mm (dia. 175mm) PNC 650198 ❑
- Stainless steel grating disc 3 mm (dia. 175mm) PNC 650199 ❑
- Stainless steel grating disc 4 mm (dia. 175mm) PNC 650205 ❑
- Stainless steel grating disc 7 mm (dia. 175mm) PNC 650207 ❑
- Parmesan Disc PNC 650208 ❑
- Stainless steel shredding disc 2 mm (dia. 175mm) PNC 650209 ❑
- Stainless steel shredding disc 4 mm (dia. 175mm) PNC 650210 ❑
- Stainless steel shredding disc 8 mm for French fries (dia. 175mm) PNC 650211 ❑
- Stainless steel slicing disc 1 mm (dia. 175mm) PNC 650213 ❑
- Stainless steel slicing disc 2 mm (dia. 175mm) PNC 650214 ❑
- Stainless steel slicing disc 3 mm (dia. 175mm) PNC 650215 ❑
- Stainless steel slicing disc 5 mm (dia. 175mm) PNC 650216 ❑
- Stainless steel slicing disc 6 mm (dia. 175mm) PNC 650217 ❑
- Stainless steel wavy slicing disc 3 mm (dia. 175mm) PNC 650218 ❑
- Stainless steel wavy slicing disc 5 mm (dia. 175mm) PNC 650219 ❑
- Aluminum slicing disc 8 mm (dia. 175mm) PNC 650220 ❑
- Aluminum slicing disc 10 mm (dia. 175mm) PNC 650221 ❑
- Dicing grid 8x8 (dia 175mm) PNC 650222 ❑
- Dicing grid 10x10 (dia 175mm) PNC 650223 ❑
- Dicing kit 8mm (aluminum slicer 8mm, grid 8x8mm) (dia. 175mm) PNC 650224 ❑
- Dicing kit 10mm (aluminum slicer 10mm, grid 10x10 mm) (dia. 175mm) PNC 650225 ❑
- Microtoothed blade rotor for 2.6lt Cutter Mixer PNC 650226 ❑
- Smooth blade rotor for 2.6lt Cutter Mixer PNC 650227 ❑
- Stainless steel bowl for 2,6lt Cutter Mixer PNC 650228 ❑
- Transparent copolyester bowl for 2,6lt Cutter Mixer PNC 650229 ❑
- Scraper for 2.6lt Cutter Mixer bowl PNC 650230 ❑
- Stainless steel bowl for 2,6lt Cutter Mixer, microtoothed rotor, lid with scraper PNC 650231 ❑
- Ejector for Vegetable Slicer PNC 650232 ❑
- Microtoothed blade rotor for 3.6lt Cutter Mixer PNC 650233 ❑
- Smooth blade rotor for 3.6lt Cutter Mixer PNC 650234 ❑
- Stainless steel bowl for 3.6lt Cutter Mixer PNC 650235 ❑
- Scraper for 3.6lt Cutter Mixer bowl PNC 650236 ❑
- Stainless steel slicing disc 4 mm (dia. 175mm) PNC 650237 ❑
- Transparent bowl for 2,6lt cutter mixer, microtoothed rotor, lid with scraper PNC 650245 ❑
- Support for 1 disc, diam. 175mm and 205mm PNC 653632 ❑


The company reserves the right to make modifications to the products without prior notice. All information correct at time of printing.

2026.11.24

# Vegetable Slicer
# PREP4YOU Combined Vegetable Slicer/ Cutter Mixer 2,6 Lt - Single Speed - No discs included

Front

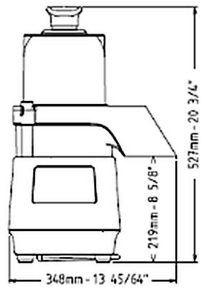


Side

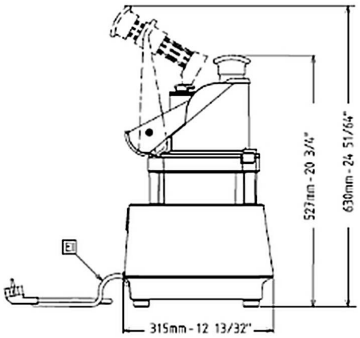


**EI** = Electrical inlet (power)

Rear side

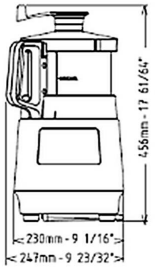


| Electric | |
|---|---|
| **Supply voltage:** | 220-240 V/1N ph/50 Hz |
| **Electrical power, max:** | 0.5 kW |
| **Total Watts:** | 0.5 kW |
| **Capacity:** | |
| **Performance (up to):** | 150 kg/Cycle |
| **Capacity:** | 2.6 litres |
| **Key Information:** | |
| **External dimensions, Width:** | 348 mm |
| **External dimensions, Depth:** | 328 mm |
| **External dimensions, Height:** | 527 mm |
| **Shipping weight:** | 18.4 kg |


The company reserves the right to make modifications to the products without prior notice. All information correct at time of printing.

2026.11.24