ITEM #

MODEL #

NAME #

SIS #

AIA #

Food Processor PREP4YOU Cutter Mixer 3,6 Lt - Variable Speed



602225 (DK36SVSG) Cutter Mixer 3.6 lt with stainless steel bowl, sealed lid, variable speed 500-3600 rpm, UK plug

Short Form Specification

Item No.

Table top Cutter Mixer. 3,6 litres, stainless steel bowl with sealed lid, scraper and central feed hole for adding products in mid-cycle. Transparent copolyester lid. Microtoothed blade rotor. Angled blades and conical base of the bowl ensure consistent mixing. All ingredients are processed evenly and quickly thanks to a special flow generated inside the bowl. No-volt release system prevents accidental start of the appliance. All parts in contact with food are removable and Dishwasher safe. Waterproof, easy to clean, flat, soft-touch buttons. Variable speed with 9 levels (500 to 3600 rpm) for extra smooth results and emulsifying. With UK plug.

Main Features

- Tabletop cutter mixer and emulsifier allowing fast chopping, mixing, mincing, griding, liquidizing and kneading.
- Includes 3,6 liter stainless steel bowl with micro-toothed blades rotor.
- Bowl/lid scraper included for uniform smooth results (emulsifying) and continuous working.
- Transparent lid, with funnel shaped hole, to add ingredients during use.
- All ingredients are processed evenly and quickly thanks to a special movement generated inside the bowl.
- Easy to clean and waterproof control panel with flat on/off button and pulse function.
- Pulse function for coarse chopping.
- All parts in contact with food are removable without the use of tools, completely dismountable and dishwasher safe.
- Productivity up to 50 settings per service.
- 9 speed levels for extra smooth results and high speed emulsifying.

Construction

- Food safety assured in accordance to European directives and UK legislation. In addition, materials in contact with food, are BPA-free.
- Product safety conform to European directives, UK legislation and international health and safety standards.
- Variable speed: 500 - 3600 rpm.
- Motor power: 750 Watt.
- Bowl in AISI 304 stainless steel.
- Micro-toothed blades in 420 AISI stainless steel and ergonomic scraper in resistant composite material to ensure consistent mixing.
- compact design, easy to move and store.
- IPX5 (IP55) waterproof, flat, touch-control panel.
- Main switch ON/OFF on the back of the appliance.
- Asynchronous industrial motor with no brushes for high reliability and quiet functioning, stainless steel motor shaft.

APPROVAL:

Included Accessories

- 1 of Microtoothed blade rotor for 3.6lt Cutter Mixer — PNC 650233
- 1 of Stainless steel bowl for 3.6lt Cutter Mixer — PNC 650235
- 1 of Scraper for 3.6lt Cutter Mixer bowl — PNC 650236
- 1 of Transparent lid for 3,6lt Cutter Mixer bowl with sealing and scraper — PNC 653862

Optional Accessories

- Transparent lid for 2,6lt cutter mixer bowl — PNC 650117 ❑
- Transparent lid without sealing for 3,6lt Cutter Mixer bowl (1 speed models) — PNC 650118 ❑
- Microtoothed blade rotor for 2.6lt Cutter Mixer — PNC 650226 ❑
- Smooth blade rotor for 2.6lt Cutter Mixer — PNC 650227 ❑
- Stainless steel bowl for 2,6lt Cutter Mixer — PNC 650228 ❑
- Transparent copolyester bowl for 2,6lt Cutter Mixer — PNC 650229 ❑
- Scraper for 2.6lt Cutter Mixer bowl — PNC 650230 ❑
- Stainless steel bowl for 2,6lt Cutter Mixer, microtoothed rotor, lid with scraper — PNC 650231 ❑
- Microtoothed blade rotor for 3.6lt Cutter Mixer — PNC 650233 ❑
- Smooth blade rotor for 3.6lt Cutter Mixer — PNC 650234 ❑
- Stainless steel bowl for 3.6lt Cutter Mixer — PNC 650235 ❑
- Scraper for 3.6lt Cutter Mixer bowl — PNC 650236 ❑
- Transparent bowl for 2,6lt cutter mixer, microtoothed rotor, lid with scraper — PNC 650245 ❑
- Transparent lid for 3,6lt Cutter Mixer bowl with sealing and scraper — PNC 653862 ❑
- Stainless steel bowl for 3,6lt Cutter Mixer, microtoothed rotor, sealed lid with scraper — PNC 653864 ❑

The company reserves the right to make modifications to the products without prior notice. All information correct at time of printing.

Food Processor
PREP4YOU Cutter Mixer 3,6 Lt - Variable Speed

Front

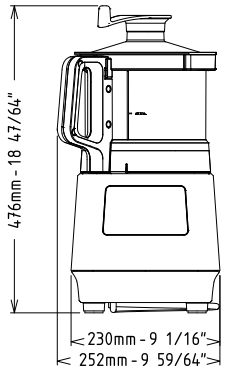

Side

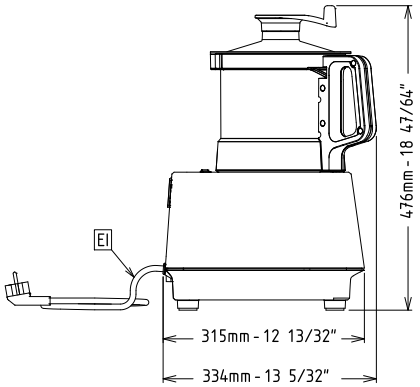

EI = Electrical inlet (power)

Top

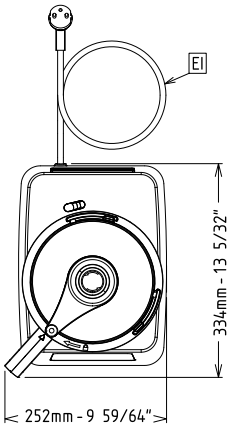

Electric	
Supply voltage:	220-240 V/1N ph/50/60 Hz
Electrical power, max:	0.75 kW
Total Watts:	0.75 kW
Capacity:	
Performance (up to):	0 kg/Cycle
Capacity:	3.6 litres
Key Information:	
External dimensions, Width:	252 mm
External dimensions, Depth:	334 mm
External dimensions, Height:	476 mm
Shipping weight:	19 kg
Meat mincing capacity:	0 kg
Mayonnaise preparation capacity:	0 kg
Pastry preparation capacity:	0 kg

The company reserves the right to make modifications to the products without prior notice. All information correct at time of printing.

2026.11.24