ITEM #

MODEL #

NAME #

SIS #

AIA #

Dough Mixers
22 liter Spiral Dough Kneader, 2 Speeds



602283 (DSK22L) 22 lt spiral Dough Kneader, 2 speed (tool speed 84-168 rpm), on wheels

Short Form Specification

Item No.

2 speed spiral dough kneader on wheels for pizzerias, bakeries and pastries. Ingredients are kneaded with a stainless steel spiral mixer arm synchronised with bowl rotation (motorized not removable bowl). Body is in painted steel, the 22 lt capacity bowl , spiral mixer arm and dough breaker pin are in stainless steel. The safety screen allows ingredients to be added without stopping. Equipped with low voltage control panel with on/off switch, speed selection and timer (up to 30 min) or continuous mode. Safety device to stop the machine when the protection screen is opened. Tool speed: 84 and 168 rpm; bowl speed: 10 and 20 rpm. Maximum dough capacity: 17 kg per cycle (maximum 10,6 kg flour/cycle), with 60% hydration.

Main Features

- Spiral dough kneader with motorized bowl (not removable) and fixed head.
- Ideal for kneading pizza dough, bread or similar dough.
- Two speed kneading for faster cycles (tool speed: 84 and 168 rpm; bowl speed: 10 and 20 rpm).
- Stainless steel (AISI304) squared dough breaker bar for fast and even kneading results
- Minimum kneading capacity: 9 kg/cycle, with 60% hydratation.
- Maximum keading capacity: 17 kg per cycle (maximum 10,6 kg flour/cycle), with 60% hydration.
- Transparent protective screen to reduce flour dust release in the work area during kneading (EU EN453:2014) and to prevent dough contaminations.
- Safety device stops the appliance if the cover is openend.
- Equipped with 4 wheels, of which 2 with brakes, allowing to easily move the appliance for storage or cleaning.
- The appliance fits under standard kitchen worktops (see installation drawing).

Construction

- Constructed in painted steel.
- AISI304 stainless steel bowl, spiral hook and dough breaker bar.
- Control panel with on/off switch, speed selection and timer.
- Analogic timer up to 30 minutes or continous mode.
- IP54 protected control panel.
- IP23 for the appliance overall.

Optional Accessories

APPROVAL:

Dough Mixers
22 liter Spiral Dough Kneader, 2 Speeds

Side

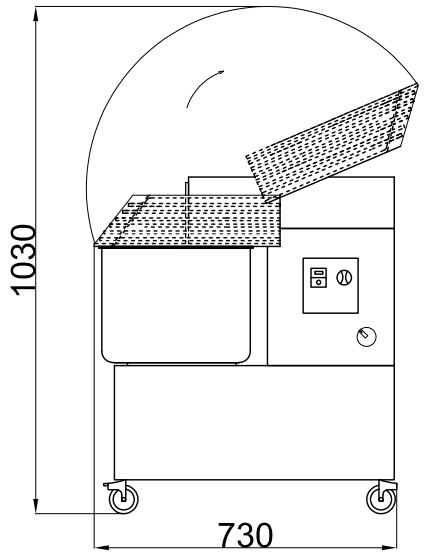

Front

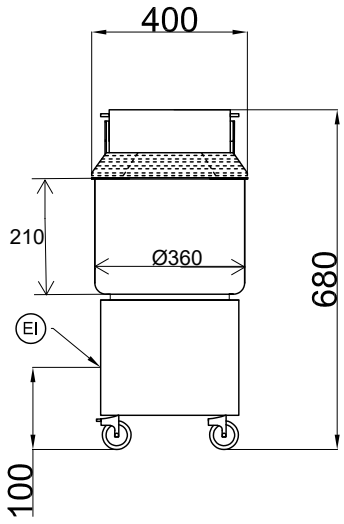

EI = Electrical inlet (power)

Top

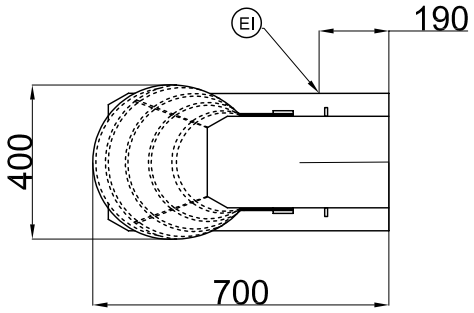

Electric	
Supply voltage:	380-415 V/3 ph/50 Hz
Total Watts:	1.1 kW
Capacity:	
Maximum kneading (60% hydratation):	17 kg/Cycle
Key Information:	
External dimensions, Width:	400 mm
External dimensions, Depth:	700 mm
External dimensions, Height:	680 mm
Shipping weight:	78 kg
Bowl capacity:	22 lt

The company reserves the right to make modifications to the products without prior notice. All information correct at time of printing.

2026.11.18