ITEM #

MODEL #

NAME #

SIS #

AIA #

Dough Mixers
62 liter Liquid Spiral Dough Kneader, 2 Speeds



602287 (DSK62L) 62 lt spiral Dough Kneader, 2 speed (tool speed 80/160 rpm), on wheels

Short Form Specification

Item No.

2 speed spiral dough kneader on wheels for pizzerias, bakeries and pastries. Ingredients are kneaded with a stainless steel spiral mixer arm synchronised with bowl rotation (motorized not removable bowl). Body is in painted steel, the 62 lt capacity bowl, spiral mixer arm and dough breaker pin are in stainless steel. The safety screen allows ingredients to be added without stopping. Equipped with low voltage control panel with on/off switch, speed selection and timer (up to 30 min) or continuous mode. Safety device to stop the machine when the protection screen is opened. Tool speed: 80 and 160 rpm; bowl speed: 10 and 20 rpm. Maximum dough capacity: 50 kg per cycle (max flour 31 kg/cycle), with 60% hydratation.

Main Features

- Spiral dough kneader with motorized bowl (not removable) and fixed head.
- Ideal for kneading pizza dough, bread or similar dough.
- Two speed kneading for faster cycles (tool speed: 80 and 160 rpm; bowl speed: 10 and 20 rpm).
- Stainless steel (AISI304) squared dough breaker bar for fast and even kneading results
- Minimum kneading capacity: 27 kg/cycle, with 60% hydratation.
- Maximum keading capacity: 50 kg per cycle (max flour 31 kg/cycle), with 60% hydratation.
- Transparent protective screen to reduce flour dust release in the work area during kneading (EU EN453:2014) and to prevent dough contaminations.
- Safety device stops the appliance if the cover is openend.
- Equipped with 4 wheels, of which 2 with brakes, allowing to easily move the appliance for storage or cleaning.
- The appliance fits under standard kitchen worktops (see installation drawing).

Construction

- Constructed in painted steel.
- AISI304 stainless steel bowl, spiral hook and dough breaker bar.
- Control panel with on/off switch, speed selection and timer.
- Analogic timer up to 30 minutes or continous mode.
- IP54 protected control panel.
- IP23 for the appliance overall.

APPROVAL:

Dough Mixers
62 liter Liquid Spiral Dough Kneader, 2 Speeds

Side

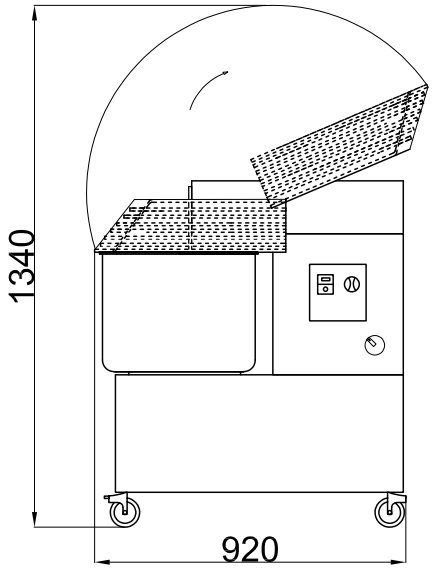

Front

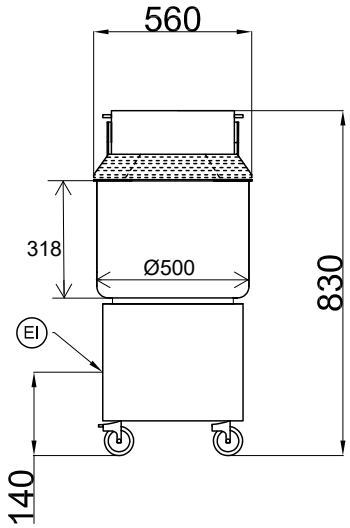

EI = Electrical inlet (power)

Top

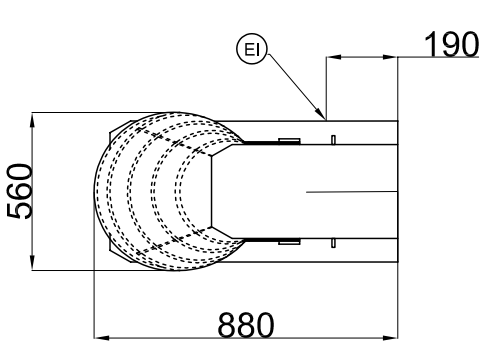

Electric	
Supply voltage:	380-415 V/3 ph/50 Hz
Total Watts:	2.2 kW
Capacity:	
Maximum kneading (60% hydratation):	50 kg/Cycle
Key Information:	
External dimensions, Width:	560 mm
External dimensions, Depth:	880 mm
External dimensions, Height:	830 mm
Shipping weight:	118 kg
Bowl capacity:	62 lt

The company reserves the right to make modifications to the products without prior notice. All information correct at time of printing.

2026.11.19