ITEM #

MODEL #

NAME #

SIS #

AIA #

Spin Dryers
Vegetable Washer & Spin Dryer, 3/15kg - Programmable



602314 (DLVA100N) Vegetable Washer and Dryer, programmable - load 3/15 kg - washing phase 60 rpm, drying phase 320rpm

Short Form Specification

Item No.

Combi machine to wash and dry with a compact footprint. Constructed in AISI 304/430 stainless steel, it can operate in automatic or manual mode. Automatic mode: 3 automatic washing cycles, with or without sanitation, 2 pump speeds selectable and spin exclusion. Manual mode: cycle time, including continuous mode, and pump speed can be selected by the operator. The washing effect is obtained by combining basket rotation and water turbulence generated by a two speeds pump. Possibility to activate the use of a sanitizing liquid during automatic wash cycles. Flat and waterproof (IPX5) touch button control panel. Lid safety micro switch prevents operation when the lid is open during use. The motor stops within 2 seconds. Very efficient and easy to clean filter system. Self-cleaning cycle and rounded corners at the bottom of the tub and removable water shower, to facilitate cleaning of the interior. Supplied with 304 AISI stainless steel basket with small squared holes (5x5 mm). Load per cycle: 3 kg (light vegetables); 15 kg (heavy vegetables). Washing speed: 60 rpm - Spin drying speed: 320 rpm.

Main Features

- Automatic operating mode: 3 washing cycles with or without automatic sanitizing function (with the possibility to set pump speed and to exclude the spinning in case of heavy vegetables).
well self-cleaning cycle: to rinse and sanitize the interior. Before starting this cycle, use the included water shower to remove possible dirt residues inside.
- Lid microswitch prevents the appliance from operating with the lid open.
- Electromagnetic device stops the machine in 2 seconds if lid is lifted during operation.
- Easy to clean, efficient filter system.
- Two turbulence levels (soft for light vegetables, and strong for heavy vegetables).
- Immersion wash or spray wash (tub filled at low level).
- Automatic or manual draining function, depending on cycle chosen.
- Load per cycle: 2-3 kg (light vegetables); max 12-15 kg heavy vegetables (excluding spin drying).
- Possibility to activate the use of a sanitizing liquid during automatic wash cycles.
- Supplied with AISI 304 stainless steel basket with small square roundish holes (5x5 mm).
- Load per cycle: 3 kg (light vegetables); 15 kg (heavy vegetables).
- Manual operating mode: operator can set the time for each step and the pump speed. Continuous cycle is also possible, selecting "cont" mode
- There are 3 programs (cycles), here is the water consumption for each of them. Cycle 1: requires 38 litres water and only 13 litres of fresh water for each subsequent cycle. Usage of sanitizing agent is recommended. Cycle 2: requires 38 litres water Cycle 3: requires 95 litres water with full immersion wash or 50 liters with semi-immersion.

Construction

- Bearing frame, lid and extractable basket in AISI 304 stainless steel. External panelling in AISI 304/430.
- Spin rotation speed of 320 rpm.
- Bearing frame, external panelling, lid and extractable basket in 304 AISI stainless steel.
- Basket support in corrosion resistant aluminum.
- Two speeds pump for immersion wash and spray wash.

APPROVAL:

Included Accessories

- 1 of Basket with lid, 5x5mm hole PNC 653883

The company reserves the right to make modifications to the products without prior notice. All information correct at time of printing.

Spin Dryers
Vegetable Washer & Spin Dryer, 3/15kg - Programmable

Side

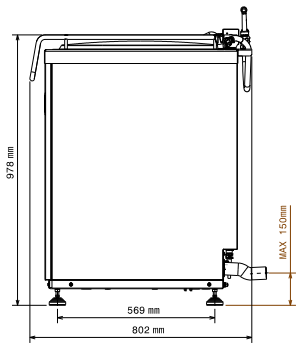

Front

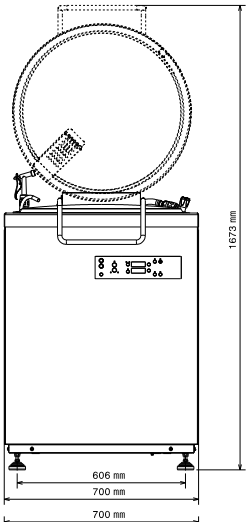

CWI1 = Cold Water inlet 1 (cleaning)
D = Drain
EI = Electrical inlet (power)

Rear side

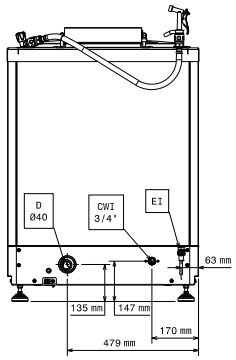

Electric

Supply voltage:	220-240 V/1N ph/50/60 Hz

Key Information:

External dimensions, Width:	700 mm
External dimensions, Depth:	802 mm
External dimensions, Height:	1000 mm
Shipping weight:	125 kg
Load per cycle - light vegetables:	2-3 kg leafy vegetables
Load per cycle - heavy vegetables:	12-15 kg heavy vegetables (no spinning)
Spin drying rotation speed:	320 RPM

The company reserves the right to make modifications to the products without prior notice. All information correct at time of printing.

2026.11.19