ITEM #

MODEL #

NAME #

SIS #

AIA #

Vegetable Slicer
Vegetable slicer, manual hopper, 2 speeds 340-680 rpm.



CC001J (DTR210YTH) Vegetable slicer, manual hopper, 2 speeds 340-680 rpm.

Short Form Specification

Item No.

For small and medium catering facilities, up to 1000 meals per service, specially designed for cuts of vegetables such as grated carrot, celery, sliced potatoes and carrots in sticks of 3 or 4 mm. Stainless steel manual hopper with an aluminium base allows large scale preparation (up to 2100 kg/h). 2 speeds vegetable slicer (340 rpm). "No volt release" safety device. Self-braking motor. On/off switch on the body of the machine. Table top version. Automatic hopper for continuous feed and long vegetable hopper are available upon request.

APPROVAL:

Main Features

- Suitable for 100-800 meals for table service and up to 1000 meals for catering service.
- Vegetable slicer with slicing, grating, shredding (julienne) as well as dicing and French fries cutting capability.
- Continuous feed model, hopper capacity is 5/6 kg.
- All parts in contact with food are removable without the use of tools, stainless steel hopper, stainless steel lever and cutting chamber are dishwasher safe.
- Complete and wide selection of blades and grids available (diam. 205 mm).
- High flexibility and ergonomy thanks to the available optional accessories.
- Smart design trolley to place the unit and the 2/1 GN tray to collect cut veggies, to maximize productivity and grant effortless operation (optional).
- Long vegetable hopper (4 round hoppers with different size) available as optional accessory to better fit different type of vegetables/fruits.
- Delivered with:
  -cutting chamber
  -ejector disc

Construction

- All discs (available on request) are made in stainless steel and dishwasher safe.
- Long vegetable hopper, lever operated hopper and the smart trolley are made in stainless steel.
- Power: 750 watts.
- 2 speeds: 340-680 rpm.
- Asynchronous silent industrial motor for heavy duty and longer life.

Optional Accessories

- Stainless steel trolley for TR210 with 1/1 GN tray rails (GN tray not included) PNC 650065 ❑
- Stainless steel shredding disc with S-blades 4x4 mm PNC 650077 ❑
- Stainless steel shredding disc with S-blades 6x6 mm (can also be used for French fries) PNC 650078 ❑
- Stainless steel shredding disc with S-blades 8x8 mm (can also be used for French fries) PNC 650079 ❑
- Stainless steel shredding disc with S-blades 10x10 mm (can also be used for French fries) PNC 650080 ❑
- Stainless steel pressing/slicing disc with corrugated S-blades 2 mm (can be used for slicing or combined with grids) PNC 650089 ❑

Vegetable Slicer
Vegetable slicer, manual hopper, 2 speeds 340-680 rpm.

- Stainless steel pressing/slicing disc with corrugated S-blades 3 mm (can be used for slicing or combined with grids) PNC 650090 ❑
- Stainless steel pressing/slicing disc with corrugated S-blades 6 mm (can be used for slicing or combined with grids) PNC 650091 ❑
- Stainless steel lever-operated hopper for TR210 (no cutting chamber, no ejector) PNC 650094 ❑
- Stainless steel long vegetable hopper with 4 tubes different sizes with pusher (no cutting chamber, no ejector) for TR210 PNC 650109 ❑
- Cleaning tool for TRS, TRK & TR210 5-8-10 mm dicing grids PNC 650110 ❑
- Dicing set 10x10x10mm (10mm aluminum slicing pressing disc with 205mm diam. and 10mm grid) PNC 650112 ❑
- Aluminum pressing/slicing disc with straight blades 10 mm - for dicing PNC 650115 ❑
- Aluminum pressing/slicing disc with straight blades 8 mm - for dicing PNC 650116 ❑
- Stainless steel shredding disc with S-blades 2x8 mm PNC 650158 ❑
- Stainless steel shredding disc with S-blades 2x10 mm PNC 650159 ❑
- Stainless steel pressing/slicing disc with corrugated S-blades 8 mm (can be used for slicing or combined with grids) PNC 650162 ❑
- Stainless steel pressing/slicing disc with corrugated S-blades 10 mm (can be used for slicing or combined with grids) PNC 650164 ❑
- Stainless steel shredding disc with S-blades 2x2 mm PNC 650166 ❑
- Stainless steel shredding disc with S-blades 3x3 mm PNC 650167 ❑
- Dicing grid 5x5 mm PNC 653566 ❑
- Dicing grid 8x8 mm PNC 653567 ❑
- Dicing grid 10x10 mm PNC 653568 ❑
- Dicing grid 12x12 mm PNC 653569 ❑
- Dicing grid 20x20 mm PNC 653570 ❑
- Grid for chips 6x6 mm PNC 653571 ❑
- Grid for chips 8x8 mm PNC 653572 ❑
- Grid for chips 10x10 mm PNC 653573 ❑
- Support for 1 disc, diam. 175mm and 205mm PNC 653632 ❑
- Ejector disc PNC 653772 ❑
- Stainless steel grating disc 2 mm PNC 653773 ❑
- Stainless steel grating disc 3 mm PNC 653774 ❑
- Stainless steel grating disc 4 mm PNC 653775 ❑
- Stainless steel grating disc 7 mm PNC 653776 ❑
- Stainless steel grating disc 9 mm PNC 653777 ❑
- Stainless steel grating disc for knoedeln and bread PNC 653778 ❑
- Stainless steel grating disc for parmesan and bread PNC 653779 ❑
- Stainless steel automatic hopper tr210 (no cutting chamber, no ejector) dim (w)450 (d)416 (h)450mm + agitator PNC 653884 ❑

The company reserves the right to make modifications to the products without prior notice. All information correct at time of printing.

Vegetable Slicer
Vegetable slicer, manual hopper, 2 speeds 340-680 rpm.

Components

- 1 of **602340** (DTR210V2TH) * NOT TRANSLATED *
  - **Shipping weight:** 34.7 kg
- 1 of **650065** (TTXTR210) Stainless steel trolley for TR210 with 1/1 GN tray rails (GN tray not included)
  - **Shipping weight:** 37 kg

The company reserves the right to make modifications to the products without prior notice. All information correct at time of printing.

Vegetable Slicer
Vegetable slicer, manual hopper, 2 speeds 340-680 rpm.

Front

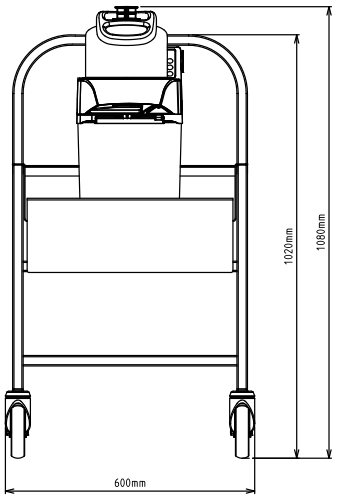

Side

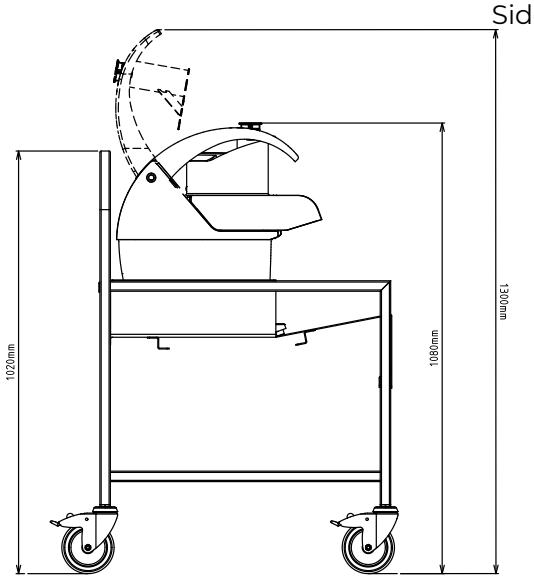

EI = Electrical inlet (power)

Top

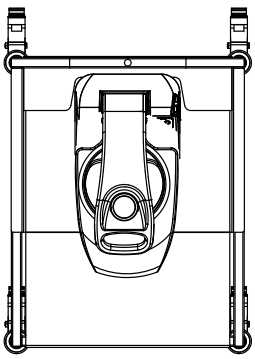

Electric

Supply voltage:	380-415/380-440 V/3 ph/50/60 Hz
Electrical power, max:	0.75 kW
Total Watts:	0.75 kW

Capacity:

Performance (up to):	1500 kg/Cycle

Key Information:

External dimensions, Width:	600 mm
External dimensions, Depth:	770 mm
External dimensions, Height:	1080 mm
Net weight:	47.1 kg

The company reserves the right to make modifications to the products without prior notice. All information correct at time of printing.

2026.11.25