ITEM #

MODEL #

NAME #

SIS #

AIA #

Vegetable Slicer
TR260 vegetable slicer, 1 speed, 1500 watts, 4 discs (2 slicing discs 2-3mm and 2 grating discs 2-3mm).



CC0H5N (DTR260L1VS) TR260 vegetable slicer, 1 speed, 1500 watts, 4 discs (2 slicing discs 2-3mm and 2 grating discs 2-3mm).

Short Form Specification

Item No.

Universal vegetable slicer for caterers serving 400 to 600 meals/sitting. 1 speed (330 rpm). 1500 watts self-braking motor. Stainless steel motor housing and aluminium basement. "No volt release" safety device. Touch button control panel with on/off and pulse function. Cutting disc diam. 300mm. Supplied with lever-operated hopper and mobile stainless steel support that incorporates a disc storage rack with 4 discs (2 slicing discs 2-3mm and 2 grating discs 2-3mm). The touch button control panel has IP55 protection with low voltage level.

Main Features

- Suitable for up to 600 meals for table service and up to 2000 meals for catering service.
- Vegetable slicer with slicing, grating, shredding (julienne) as well as dicing and French fries cutting capability.
- Pulse function for precise cutting.
- Delivered with lever operated hopper and a mobile stainless steel support that incorporates a disc storage rack with 4 discs (2 slicing discs 2-3mm and 2 grating discs 2-3mm)
- Large round (long vegetable) and large half moon feed hoppers.
- "No volt release" safety device.
- Complete selection of blades and dicing grids available (diameter 300 mm).
- Available as option a long vegetable accessory to fit in the lever operated hopper converting it into a long vegetable hopper (3 cylindrical hoppers: 50, 59,5, 70 mm diameter)
- Available upon request: Automatic cylindrical hopper (dia=280 mm), long vegetable hopper (3 tubes) and cabbage hopper.
- Continuous feed model.
- Magnetic safety system and motor brake. Prevents machine from running when lever swings away or is open.

Construction

- Stainless steel motor housing with aluminum basement.
- 1 speed: 330 rpm
- Power: 1500 watts.

- 1 of **650150** (J302N) Stainless steel grating disc 2 mm (dia. 300 mm)
  - **Shipping weight:** 1.83 kg
- 1 of **650151** (J303N) Stainless steel grating disc 3 mm (dia. 300 mm)
  - **Shipping weight:** 1.82 kg
- 1 of **653172** (C302) Slicing disc 2 mm (dia. 300 mm)
  - **Shipping weight:** 2.11 kg
- 1 of **653173** (C303) Slicing disc 3 mm (dia. 300 mm)
  - **Shipping weight:** 3 kg

APPROVAL:

Vegetable Slicer
TR260 vegetable slicer, 1 speed, 1500 watts, 4 discs (2 slicing discs 2-3mm and 2 grating discs 2-3mm).

Optional Accessories

- Feed tray to be combined with cabbage hopper and long vegetable hopper — PNC 650036 ❑
- Stainless steel grating disc for parmesan (dia. 300 mm) — PNC 650148 ❑
- Stainless steel grating disc for knoedeln (dia. 300 mm) — PNC 650149 ❑
- Stainless steel grating disc 2 mm (dia. 300 mm) — PNC 650150 ❑
- Stainless steel grating disc 3 mm (dia. 300 mm) — PNC 650151 ❑
- Stainless steel grating disc 4 mm (dia. 300 mm) — PNC 650152 ❑
- Stainless steel grating disc 7 mm (dia. 300 mm) — PNC 650153 ❑
- Stainless steel grating disc 9 mm (dia. 300 mm) — PNC 650154 ❑
- Stainless steel cabbage grating disc with central shaft for stem removal 7 mm - to be combined with cabbage hopper — PNC 650157 ❑
- Cabbage slicing disc with central shaft for stem removal 1 mm (to be used with cabbage feed hopper) — PNC 653009 ❑
- Stainless steel mobile stand. Height: 730 mm — PNC 653017 ❑
- Lever-operated hopper for TR260 (including feed tray) — PNC 653036 ❑
- Automatic feed hopper for TR260 — PNC 653037 ❑
- Large hopper for TR260, diam. 280mm — PNC 653048 ❑
- Dicing grid 10 mm for TR260 — PNC 653051 ❑
- Dicing grid 16 mm for TR260 — PNC 653052 ❑
- Dicing grid 20 mm for TR260 — PNC 653053 ❑
- Dicing grid 25 mm for TR260 — PNC 653054 ❑
- Dicing grid 32 mm for TR260 — PNC 653055 ❑
- Slicing disc 2 mm (dia. 300 mm) — PNC 653172 ❑
- Slicing disc 3 mm (dia. 300 mm) — PNC 653173 ❑
- Slicing disc 1 mm (dia. 300 mm) — PNC 653188 ❑
- Slicing disc 5 mm (dia. 300 mm) — PNC 653189 ❑
- Slicing disc 6 mm (dia. 300 mm) — PNC 653190 ❑
- Slicing disc 8 mm (dia. 300 mm) — PNC 653191 ❑
- Slicing disc 10 mm (dia. 300 mm) — PNC 653192 ❑
- Slicing disc 16 mm (dia. 300 mm) — PNC 653193 ❑
- Shredding disc 2x2 mm (dia. 300 mm) — PNC 653195 ❑
- Shredding disc 3x3 mm (dia. 300 mm) — PNC 653196 ❑
- Shredding disc 4x4 mm (dia. 300 mm) — PNC 653197 ❑
- Shredding disc 6x6 mm (can also be used for chips - dia. 300 mm) — PNC 653198 ❑
- Shredding disc 8x8 mm (can also be used for chips - dia. 300 mm) — PNC 653199 ❑
- Shredding disc 10x10mm (can also be used for chips - dia. 300 mm) — PNC 653200 ❑
- Stainless steel disc rack for 300 dia. discs (to be fitted on the mobile stand basement) — PNC 653212 ❑
- Disc with corrugated blades 2 mm (dia. 300 mm) — PNC 653217 ❑
- Disc with corrugated blades 3 mm (dia. 300 mm) — PNC 653218 ❑
- Disc with corrugated blades 6 mm (dia. 300 mm) — PNC 653219 ❑
- Long vegetable accessory for TR260 lever-operated hopper (to change the lever-operated hopper into long vegetable hopper) — PNC 653223 ❑
- Stainless steel trolley suitable to hold one 2/1 GN container (GN container not included) — PNC 653224 ❑
- Cabbage slicing disc with central shaft for stem removal 2 mm (to be used with cabbage feed hopper) — PNC 653227 ❑
- Cabbage slicing disc with central shaft for stem removal 3 mm (to be used with cabbage feed hopper) — PNC 653228 ❑
- Dicing grid 12 mm for TR260 — PNC 653301 ❑
- Long vegetable hopper with 3 tubes diam. 50 to 70 mm for TR260 — PNC 653306 ❑

The company reserves the right to make modifications to the products without prior notice. All information correct at time of printing.

Vegetable Slicer
TR260 vegetable slicer, 1 speed, 1500 watts, 4 discs (2 slicing discs 2-3mm and 2 grating discs 2-3mm).

Front

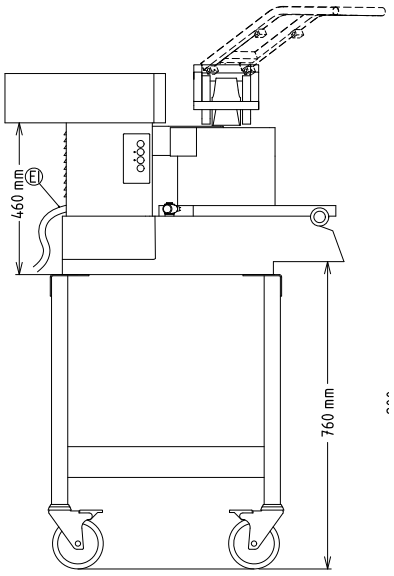

Side

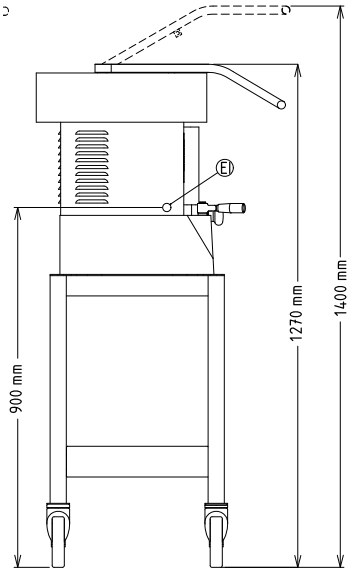

EI = Electrical inlet (power)

Top

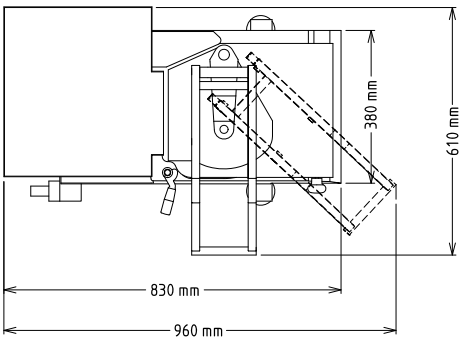

Electric	
Supply voltage:	220-240 V/1N ph/50 Hz
Electrical power, max:	1.5 kW
Total Watts:	1.5 kW
Capacity:	
Performance (up to):	700 kg/Cycle
Key Information:	
External dimensions, Width:	610 mm
External dimensions, Depth:	830 mm
External dimensions, Height:	1270 mm
Shipping weight:	

The company reserves the right to make modifications to the products without prior notice. All information correct at time of printing.