ITEM #

MODEL #

NAME #

SIS #

AIA #

Vegetable Slicer
TR210 Vegetable Slicer with Automatic Hopper ss trolley - 2 Speeds



CC0H67 (DTR2102VT) Vegetable slicer, automatic hopper on stainless steel trolley, 2 speeds 340-680 rpm.

Short Form Specification

Item No.

For medium catering facilities, up to 1000 meals per service, specially designed for slicing, grating, julienne and dicing.
Stainless steel automatic feed hopper allows large scale preparations (up to 1500 kg/cycle).
Freestanding configuration thanks to the smart design trolley, which can host both the machine and the 2/1 GN tray to collect the cut vegetables
Parts in contact with food - stainless steel hopper and cutting chamber - can be removed without tools and placed in a dishwasher for fast cleaning.
Asynchronous industrial motor for heavy duty and longer life.
Safety granted by magnetic micro switch which stops the machine if hopper is not correctly positioned.
Waterproof (IP55) control panel with “no volt release" safety device.
Two-speed model 340 and 680 rpm.
Manual lever-operated hopper, long vegetable hopper available as optional accessories.

Main Features

- Suitable for 100-800 meals for table service and up to 1000 meals for catering service.
- Vegetable slicer with slicing, grating, shredding (julienne) as well as dicing and French fries cutting capability.
- Delivered with: - automatic hopper - cutting chamber - ejector disc - smart design trolley to place the unit and the 2/1 GN tray to collect cut veggies, to maximize productivity and grant effortless operation
- Continuous feed model, hopper capacity is 5/6 kg.
- All parts in contact with food are removable without the use of tools, stainless steel hopper, stainless steel lever and cutting chamber are dishwasher safe.
- Complete and wide selection of blades and grids available (diam. 205 mm).
- High flexibility and ergonomy thanks to the available optional accessories.
- Long vegetable hopper (4 round hoppers with different size) available as optional accessory to better fit different type of vegetables/fruits.
- Lever operated hopper (including long vegetable and half moon hoppers) to reach the maximum precision in the result (optional).

Construction

- All discs (available on request) are made in stainless steel and dishwasher safe.
- Automatic hopper are made entirely in stainless steel for better durability.
- Long vegetable hopper, lever operated hopper and the smart trolley are made in stainless steel.
- Power: 750 watts.
- 2 speeds: 340-680 rpm.
- Asynchronous silent industrial motor for heavy duty and longer life.

APPROVAL:

Vegetable Slicer
TR210 Vegetable Slicer with Automatic Hopper ss trolley - 2 Speeds

Vegetable Slicer
TR210 Vegetable Slicer with Automatic Hopper ss trolley - 2 Speeds

Components

- 1 of **600412** (DTR210Y2V) Vegetable slicer, automatic hopper, 2 speeds 340-680 rpm.
  - **Shipping weight:** 39 kg
- 1 of **650065** (TTXTR210) Stainless steel trolley for TR210 with 1/1 GN tray rails (GN tray not included)
  - **Shipping weight:** 37 kg

Optional Accessories

• Stainless steel trolley for TR210 with 1/1 GN tray rails (GN tray not included)	PNC 650065	❑
• Stainless steel shredding disc with S-blades 4x4 mm	PNC 650077	❑
• Stainless steel shredding disc with S-blades 6x6 mm (can also be used for French fries)	PNC 650078	❑
• Stainless steel shredding disc with S-blades 8x8 mm (can also be used for French fries)	PNC 650079	❑
• Stainless steel shredding disc with S-blades 10x10 mm (can also be used for French fries)	PNC 650080	❑
• Stainless steel pressing/slicing disc with corrugated S-blades 2 mm (can be used for slicing or combined with grids)	PNC 650089	❑
• Stainless steel pressing/slicing disc with corrugated S-blades 3 mm (can be used for slicing or combined with grids)	PNC 650090	❑
• Stainless steel pressing/slicing disc with corrugated S-blades 6 mm (can be used for slicing or combined with grids)	PNC 650091	❑
• Stainless steel lever-operated hopper for TR210 (no cutting chamber, no ejector)	PNC 650094	❑
• Stainless steel long vegetable hopper with 4 tubes different sizes with pusher (no cutting chamber, no ejector) for TR210	PNC 650109	❑
• Cleaning tool for TRS, TRK & TR210 5-8-10 mm dicing grids	PNC 650110	❑
• Dicing set 10x10x10mm (10mm aluminum slicing pressing disc with 205mm diam. and 10mm grid)	PNC 650112	❑
• Aluminum pressing/slicing disc with straight blades 10 mm - for dicing	PNC 650115	❑
• Aluminum pressing/slicing disc with straight blades 8 mm - for dicing	PNC 650116	❑
• Stainless steel shredding disc with S-blades 2x8 mm	PNC 650158	❑
• Stainless steel shredding disc with S-blades 2x10 mm	PNC 650159	❑
• Stainless steel pressing/slicing disc with corrugated S-blades 8 mm (can be used for slicing or combined with grids)	PNC 650162	❑
• Stainless steel pressing/slicing disc with corrugated S-blades 10 mm (can be used for slicing or combined with grids)	PNC 650164	❑
• Stainless steel shredding disc with S-blades 2x2 mm	PNC 650166	❑
• Stainless steel shredding disc with S-blades 3x3 mm	PNC 650167	❑
• Dicing grid 5x5 mm	PNC 653566	❑
• Dicing grid 8x8 mm	PNC 653567	❑
• Dicing grid 10x10 mm	PNC 653568	❑
• Dicing grid 12x12 mm	PNC 653569	❑
• Dicing grid 20x20 mm	PNC 653570	❑
• Grid for chips 6x6 mm	PNC 653571	❑
• Grid for chips 8x8 mm	PNC 653572	❑
• Grid for chips 10x10 mm	PNC 653573	❑
• Support for 1 disc, diam. 175mm and 205mm	PNC 653632	❑
• Ejector disc	PNC 653772	❑
• Stainless steel grating disc 2 mm	PNC 653773	❑
• Stainless steel grating disc 3 mm	PNC 653774	❑
• Stainless steel grating disc 4 mm	PNC 653775	❑
• Stainless steel grating disc 7 mm	PNC 653776	❑
• Stainless steel grating disc 9 mm	PNC 653777	❑
• Stainless steel grating disc for knoedeln and bread	PNC 653778	❑
• Stainless steel grating disc for parmesan and bread	PNC 653779	❑
• Stainless steel automatic hopper tr210 (no cutting chamber, no ejector) dim (w)450 (d)416 (h)450mm + agitator	PNC 653884	❑

The company reserves the right to make modifications to the products without prior notice. All information correct at time of printing.

2026.11.25

Vegetable Slicer
TR210 Vegetable Slicer with Automatic Hopper ss trolley - 2 Speeds

Front

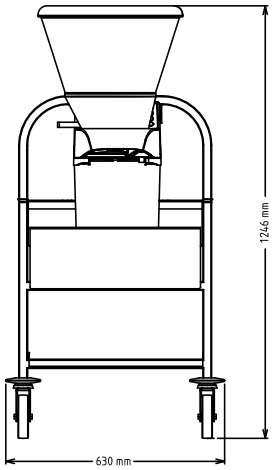

Side

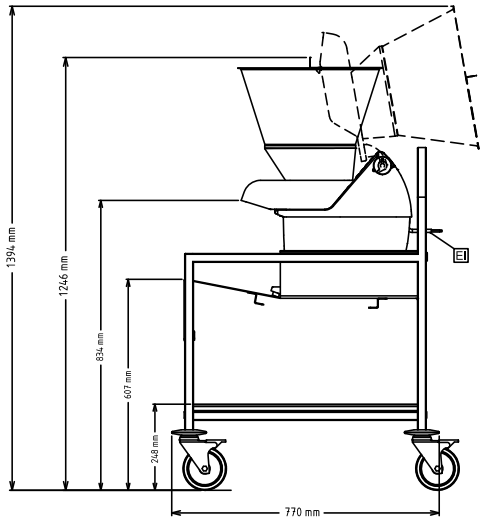

EI = Electrical inlet (power)

Top

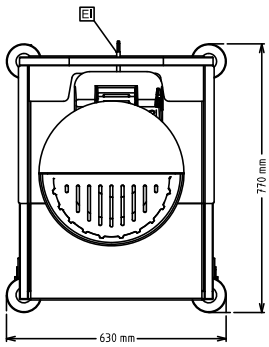

Electric

Supply voltage:	380-415/380-440 V/3 ph/50/60 Hz
Electrical power, max:	0.75 kW
Total Watts:	0.75 kW

Capacity:

Performance (up to):	1500 kg/Cycle

Key Information:

External dimensions, Width:	630 mm
External dimensions, Depth:	770 mm
External dimensions, Height:	1246 mm

The company reserves the right to make modifications to the products without prior notice. All information correct at time of printing.

2026.11.25