ITEM #

MODEL #

NAME #

SIS #

AIA #

Food Processor Cutter Mixer 4.5 LT - Single Speed



600443 (DK45Y1V) Cutter mixer 4,5 lt capacity, 1 speed 1500 rpm. Supplied with microtoothed blade rotor and stainless steel bowl

Short Form Specification

Item No.

2 in 1 machine: table-mounted cutter and emulsifier thanks to the ergonomic and easily dismountable scraper, in heavy duty composite material, for liquidising, mixing and mincing in a matter of seconds. Stainless steel 4,5 litre bowl with high chimney to increase the real capacity of the bowl (use up to 75% of nominal capacity). Unique bowl design for mixing both large or small quantities. Transparent lid to check consistency of food and to eventually add ingredients without having to open the lid. Hinged cover, when lifted, remains open to permit a fast and easy check of preparation. Smooth blades in 420 AISI stainless steel. All parts are easily dismantled and dishwasher safe. Multiple safety devices ensure the machine will only operate when the cover is properly closed and all parts are correctly positioned. Flat and waterproof control panel with on/off button, pulse function and 1 speed (1500 rpm).

Main Features

- Table-mounted robust cutter and emulsifier allows fast liquidizing, mixing, chopping, mincing, and pastry-making.
- Emulsifier function (scraper) included as standard.
- Base fixed cover for a better handling.
- Lid with central opening to add ingredients in mid-cycle.
- All parts in contact with food are removable without the use of tools, completely dismountable and dishwasher safe.
- Easy to clean and waterproof control panel with flat on/off button and pulse function.
- Microswitch and safety devices on handle, lid and bowl.
- Pulse function for coarse chopping.
- Productivity suitable for 50-100 meals per service.

Construction

- Stainless steel 4.5 liter bowl has a high chimney to ensure high productivity also when processing liquids.
- 1 speed: 1.500 rpm.
- Transparent lid incorporates a magnetic contact safety system.
- Improved ventilation system to manage smoothly heavy duty use.
- Reinforced feet to withstand the repeated handling of the unit.

Included Accessories

- 1 of Lid and bowl scraper for 4,5 lt cutter mixer — PNC 650099
- 1 of Stainless steel bowl for 4,5 lt cutter mixer — PNC 653589
- 1 of Microtoothed blade rotor for 4,5 lt cutter mixer — PNC 653876

Optional Accessories

- Lid and bowl scraper for 4,5 lt cutter mixer — PNC 650099 ❑
- Stainless steel bowl for 4,5 lt cutter mixer — PNC 653589 ❑
- Smooth blade rotor for 4,5 lt cutter mixer — PNC 653875 ❑
- Microtoothed blade rotor for 4,5 lt cutter mixer — PNC 653876 ❑
- Microtooth blade rotor (emulsifier) for 4,5 lt cutter mixer — PNC 653877 ❑

APPROVAL:

Food Processor
Cutter Mixer 4.5 LT - Single Speed

Front

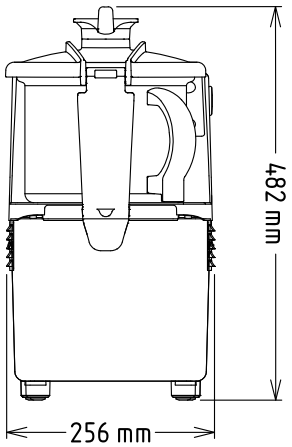

Side

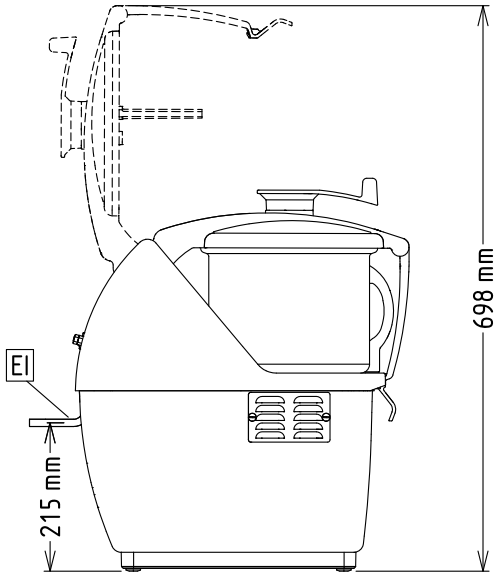

EI = Electrical inlet (power)

Top

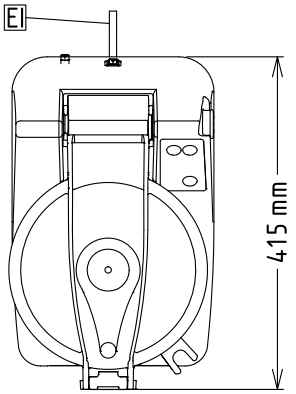

Electric	
Supply voltage:	220-240 V/1N ph/50 Hz
Electrical power, max:	0.75 kW
Total Watts:	0.75 kW
Capacity:	
Performance (up to):	2 kg/Cycle
Capacity:	4.5 litres
Key Information:	
External dimensions, Width:	256 mm
External dimensions, Depth:	415 mm
External dimensions, Height:	482 mm
Shipping weight:	22 kg

The company reserves the right to make modifications to the products without prior notice. All information correct at time of printing.

2026.11.20