ITEM #

MODEL #

NAME #

SIS #

AIA #

Dough sheeters
Dough Sheeter, floor standing belt, 2 Speed - 600 mm



601588 (DLMP600BF) Floor standing belt dough sheeter with tilting tables, working width 600 mm. Belt length 1300 mm. Removable scrapers. 2 speeds. Fitting with croissant module

Short Form Specification

Item No.

Floor standing belt dough sheeter. 2 speeds. Working width 600mm and 2 working belts 1300mm in length. Rolling direction can be inverted by the movement of a joystick. Cylinders can be regulated from 0,1 to 34mm in thickness. Chromium plated steel rollers (71,5mm diam.) Smooth surfaces are painted white. The upper and lower roller scrapers are easily removable for cleaning. The slides can be raised to save space. The belts can be removed for washing. Safety grating is hinged on the structure and equipped with a safety micro-switch to avoid injury. If the gratings are raised over a dangerous level the motor will stop. Flour container fixed on the top of the machine. Emergency stop button with lock and manual re-start ensures the cylinders stop immediately guaranteeing operator safety. Remote foot pedal to change rolling direction and cutting module for croissants 130x140mm are available as optional accessories.

Main Features

- Belt dough sheeter for large productions.
- Working width of 600 mm and belt 1300 mm in length.
- Flour container fixed on the top of the machine.
- Safety grids hinged to the structure, equipped with a safety micro-switch against injury.
- Motor stops if gratings are raised to a dangerous level.
- Emergency stop button with lock and manual re-start to ensure cylinder halt for added operator safety.
- General electrical protection by fuses.
- Motor protected by a circuit breaker.
- Remote foot pedal to change rolling direction, available as optional accessory.

Construction

- 2 speeds.
- Low speed: belt entry feeding speed of 11.5 m/min and exit feeding speed of 21.4 m/min.
- 71.5 mm diameter cylinders adjustable from 0.1 to 34 mm in thickness.
- High speed: belt entry feeding speed of 24.4 m/min and exit feeding speed of 42.7 m/min.
- Slides can be raised to save space and the belts can be removed for washing.
- Chromium plated steel rollers.
- Floor standing belt dough sheeter mounted on wheels.

Optional Accessories

- Remote foot pedal (low tension 24V) to change rolling direction. For motorized dough sheeters — PNC 653600 ❑
- Cutting module for croissants. Triangle cut 130x140 mm for 600 mm models — PNC 653601 ❑

APPROVAL:

Dough sheeters
Dough Sheeter, floor standing belt, 2 Speed - 600 mm

Front

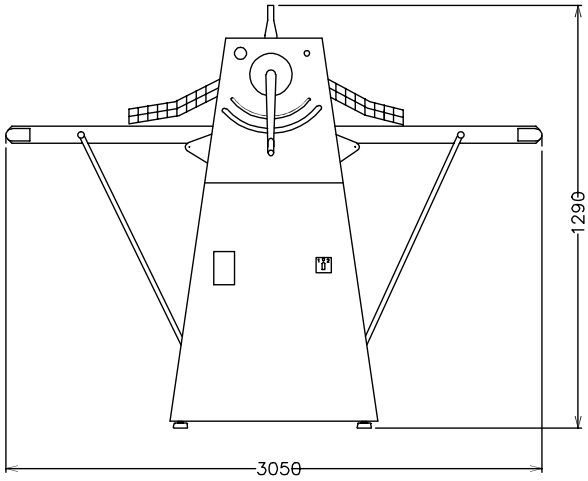

Side

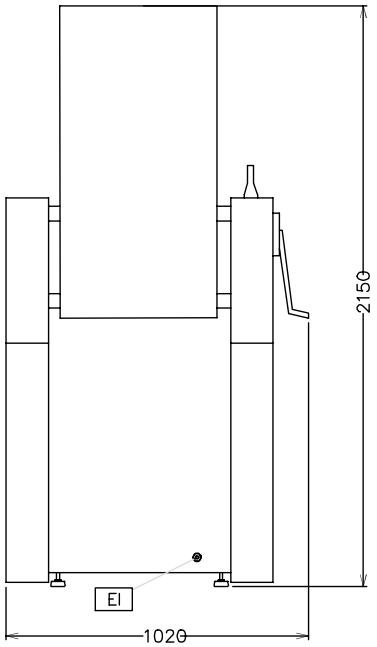

EI = Electrical inlet (power)

Top

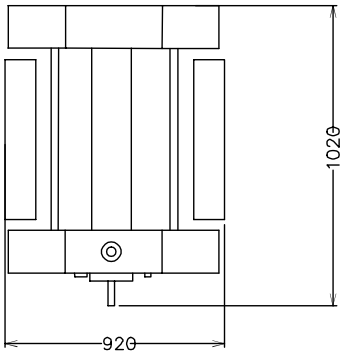

Electric	
Supply voltage:	400 V/3 ph/50 Hz
Total Watts:	1.1 kW
Capacity:	
Capacity:	12 kg
Key Information:	
External dimensions, Width:	3050 mm
External dimensions, Depth:	1020 mm
External dimensions, Height:	1290 mm
Net weight (kg):	243
Material specification:	with belts in antistatic, foodgrade impregnated polyester fabric for easy cleaning
Note:	min/max dough thickness in mm -> 0,1:34 mm Power 0,6 - 1,1 kW

The company reserves the right to make modifications to the products without prior notice. All information correct at time of printing.

2026.11.19