ITEM #

MODEL #

NAME #

SIS #

AIA #

Dough sheeters
Dough Sheeter, table standing - 500 mm



601567 (DLMP5003)	Table standing dough sheeter, cylinders (diam. 60 mm), working width 500 mm, thickness 0,1 to 28 mm. Removable Teflon coated flaps
601568 (DLMP5001)	Table standing dough sheeter, cylinders (diam. 60 mm), working width 500 mm, thickness 0,1 to 28 mm. Removable Teflon coated flaps

Short Form Specification

Item No.

Motorized dough sheeter for table top use or can be mounted onto a mobile stand (optional). Working width 500mm. Rolling direction can be inverted by the movement of a joystick. Cylinders can be regulated from 0,1 to 28mm in thickness. Chromium plated steel rollers (60mm diam.). Smooth surfaces are painted white. The upper and lower roller scrapers are easily removable for cleaning. Slides can be disassembled and have a non-stick coating to facilitate the sliding of the dough. Safety grating is hinged on the structure and equipped with a safety micro-switch to avoid injury. If the gratings are raised over a dangerous level the motor will stop. Flour container fixed on the top of the machine. Emergency stop button with lock and manual re-start ensures the cylinders stop immediately guaranteeing operator safety. Remote foot pedal to change rolling direction, available as an accessory.

APPROVAL:

Main Features

- Motorized dough sheeter for small operations.
- Designed to spread pastry for food preparations, suitable for bakeries, pasta shops and pizzerias.
- 500 mm in working width.
- Rolling direction may be inverted by moving a joystick.
- Flour container fixed on the top of the machine.
- Remote foot pedal to change rolling direction, available as optional accessory.
- Safety grids hinged to the structure, equipped with a safety micro-switch against injury.
- Motor stops if gratings are raised to a dangerous level.
- Emergency stop button with lock and manual re-start to ensure cylinder halt for added operator safety.

Construction

- 60 mm diameter cylinders may be regulated for sheets ranging from 0,1 to 27 mm in thickness.
- Suitable for table top configuration or mounted on a mobile stand (optional).
- Compact and portable design.
- Teflon-coated flaps to facilitate dough sliding.
- Upper and lower roller scrapers easily removable for cleaning
- Flaps with teflon non-stick coating can be disassembled to save space.
- Chromium plated steel rollers.

Optional Accessories

- Trolley for table standing dough sheeters for LMP500 (not compatible with LMP500BT and LMP500BF models) PNC 653599 ❑
- Remote foot pedal (low tension 24V) to change rolling direction. For motorized dough sheeters PNC 653600 ❑

Dough sheeters
Dough Sheeter, table standing - 500 mm

Front

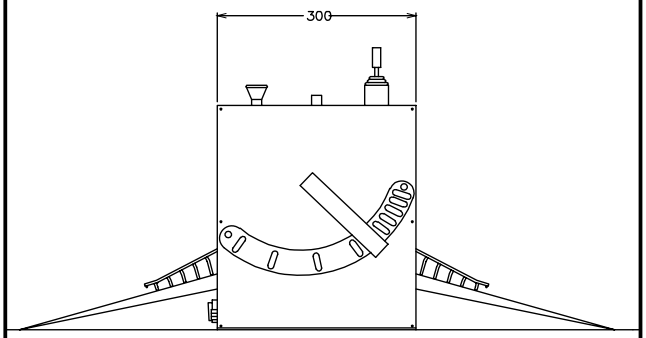

Side

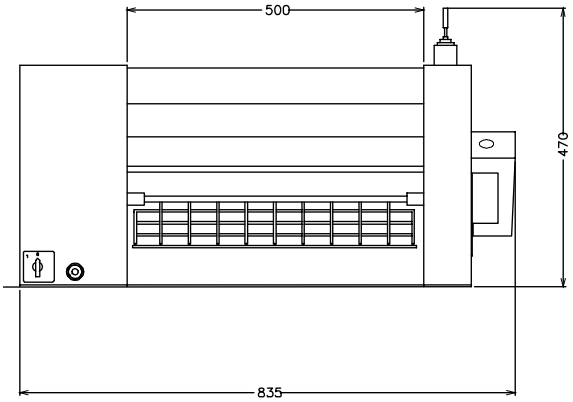

EI = Electrical inlet (power)

Top

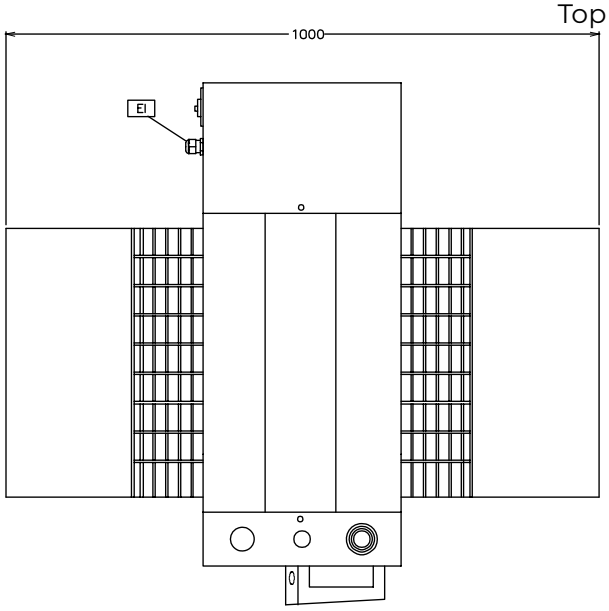

Electric

Supply voltage:	
601567 (DLMP5003)	230/400 V/3 ph/50/60 Hz
601568 (DLMP5001)	230 V/1 ph/50 Hz
Total Watts:	0.37 kW

Capacity:

Capacity:	4 kg

Key Information:

External dimensions, Width:	1000 mm
External dimensions, Depth:	835 mm
External dimensions, Height:	470 mm
Net weight (kg):	71
Note:	min/max dough thickness in mm -> 0,1:28 mm

The company reserves the right to make modifications to the products without prior notice. All information correct at time of printing.

2026.11.19