ITEM #

MODEL #

NAME #

SIS #

AIA #

Planetary Mixers
Planetary Mixer, 30 lt



600162 (DXBM30B)	30 lt planetary mixer, bowl detection device and SOLID BPA free safety screen, with mechanical speed variation. Equipped with spiral hook, paddle and whisk
600163 (DXBM30B3)	30 lt planetary mixer, bowl detection device and SOLID BPA free safety screen, with mechanical speed variation. Equipped with spiral hook, paddle and whisk

Short Form Specification

Item No.

Floor model, suitable for all kneading, blending and whipping operations. Body in non-corrosive material with 18/8 (AISI 302) 30 litre capacity stainless steel bowl. Powerful asynchronous motor (750 W) with mechanical speed variator (8 speed levels from 35 to 180 rpm). Water protected planetary system. Removable/transparent solid safety screen - made of a bisphenol-A free (BPA) copolyester. Removable and dismantled solid safety screen and stainless steel wire structure. Water proof (IP55) and flat touch button control panel with 60 min. timer. Bowl detection device allows the mixer to switch on only when the bowl and the safety screen are properly installed and positioned together. Adjustable feet for stability.
Supplied with 3 tools: spiral hook, paddle and whisk.

APPROVAL:

Main Features

- Professional beater mixer that provides all the basic mixer functions: kneading of all sort of pastes, mixing of semi-liquid products, emulsions and various sauces.
- Delivered with: - Spiral Hook, Paddle, Wire Whisk and Mixing Bowl for 30 lt
- Waterproof touch button control panel with timer setting and display.
- Mechanical speed variator.
- Maximum capacity (flour, with 60% of hydration) 7 kg, suitable for 100-300 meals per service.
- Raising and lowering of the bowl controlled by lever with an automatic locking of the bowl when in the raised position.
- Solid BPA-free safety screen, covering the stainless steel wire one, limits the flour and unsafe dust particles when used in bakery and pastry preparation.
- Removable chute to add ingredients while working included as standard.
- Bowl detection device allows the mixer to switch on only when the bowl and the solid safety screen are properly installed and positioned together.

Construction

- Body in non-corrosive material.
- Sturdy construction with mechanically welded strong metal frame.
- 302 AISI Stainless steel bowl - 30 lt. capacity.
- Asynchronous motor with high start-up torque.
- 8 speeds, from 35 to 180 prm, to be lever operated while the machine is working, according to the tool and the mixture hardness.
- Water protected planetary system (IP55 electrical controls, IP23 overall machine).
- Power: 750 watts.
- Planetary movement based on self lubricating gears, eliminating any risk of leaks.
- The solid safety screen and the stainless steel wire structure are both removable and dismantled for cleaning and are dishwasher safe.
- Adjustable feet for perfect stability.

Included Accessories

• 1 of Bowl 30 lt mixer	PNC 650123
• 1 of Spiral Hook 30 lt	PNC 653161
• 1 of Paddle 30 lt	PNC 653165
• 1 of Whisk 30 lt	PNC 653166

Optional Accessories

• Bowl 30 lt mixer	PNC 650123 ❑
• 10 lt reduction kit (bowl, spiral hook, paddle, whisk) and removable spout for 30 lt planetary mixers	PNC 650124 ❑

• 20 lt reduction kit (bowl, spiral hook, paddle, whisk) for 30 lt planetary mixers	PNC 650125	❑
• Spiral Hook 30 lt	PNC 653161	❑
• Paddle 30 lt	PNC 653165	❑
• Whisk 30 lt	PNC 653166	❑
• Reinforced Whisk 30 lt (for heavy duty use)	PNC 653253	❑
• Kit wheels for 20/30/40 litre planetary mixers (only XB models)	PNC 653552	❑
• Bowl trolley for 30 lt planetary mixers (cannot be used with wheel kit 653552)	PNC 653562	❑

The company reserves the right to make modifications to the products without prior notice. All information correct at time of printing.

2026.11.19

Planetary Mixers
Planetary Mixer, 30 lt

Front

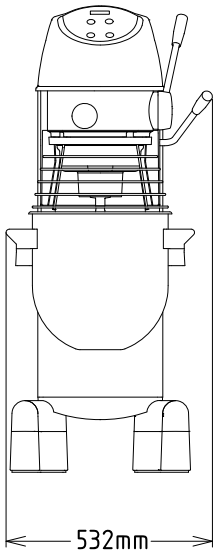

Side

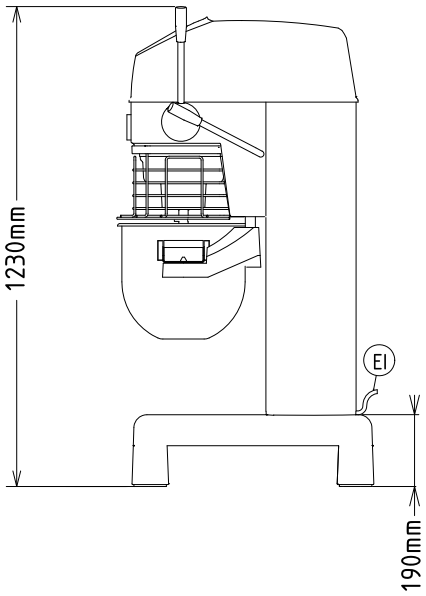

EI = Electrical inlet (power)

Top

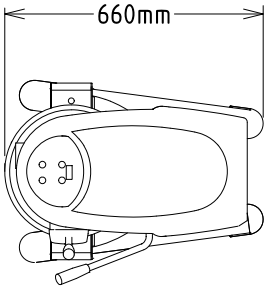

Electric

Supply voltage:	
600162 (DXBM30B)	220-240 V/1N ph/50 Hz
600163 (DXBM30B3)	200-240/380-415 V/3 ph/50 Hz
Electrical power, max:	0.75 kW
Total Watts:	0.75 kW

Capacity:

Performance (up to):	7 kg/Cycle
Capacity:	30 litres

Key Information:

External dimensions, Width:	532 mm
External dimensions, Depth:	685 mm
External dimensions, Height:	1230 mm
Shipping weight:	
600162 (DXBM30B)	114 kg
600163 (DXBM30B3)	111 kg
Cold water paste:	7 kg with Spiral hook
Egg whites:	50 with Whisk

The company reserves the right to make modifications to the products without prior notice. All information correct at time of printing.

2026.11.19