ITEM #

MODEL #

NAME #

SIS #

AIA #

# Planetary Mixers
# Planetary Mixer for Bakery, 20 lt. - Electronic



**600161 (DXBB20B)**

20 lt capacity planetary mixer, bowl detection device and SOLID BPA free safety screen, with 3 fixed speeds and electronic variable speed. Equipped with spiral hook, paddle, whisk and protection grid. Suitable for bakery preparation

## Short Form Specification

Item No.

Suitable for bakery and pastry making, for kneading, blending and whipping operations. Reinforced body for heavy duty use with 18/8 (AISI 302) 20 litre capacity stainless steel bowl. Reinforced transmission and powerful asynchronous motor (1500W) with 3 fixed speeds (40, 80, 160 rpm) and electronic variable speed (from 30 to 175 rpm). Water proof (IP55) and flat touch button control panel with a timer from 0-59 min. Removable/transparent solid safety screen - made of a bisphenol-A free (BPA) copolyester. Height adjustable feet. Kneading: speed 1 or 2 with hook; Blending speed 2 with paddle; Whipping: speed 3 with whisk.
Supplied with 3 tools: spiral hook, paddle and reinforced whisk.

APPROVAL:

## Main Features

- Professional beater mixer designed to withstand the strong demands of bakery and pastry making.
- Maximum capacity (flour, with 60% of hydration) 7 kg.
- Waterproof touch button control panel with timer, speed setting and display.
- Delivered with: - Spiral Hook, Paddle, Reinforced Wire Whisk and Mixing Bowl for 20 lt
- Kneading speed: "1" or "2" with hook.
- Mixing speed: "2" with paddle.
- Emulsifying speed: "3" with whisk.
- Raising and lowering of the bowl controlled by lever with an automatic locking of the bowl when in the raised position.
- Bowl detection device allows the mixer to switch on only when the bowl and the solid safety screen are properly installed and positioned together.
- Solid BPA-free safety screen, covering the stainless steel wire one, limits the flour and unsafe dust particles when used in bakery and pastry preparation.
- Removable chute to add ingredients while working included as standard.

## Construction

- Reinforced body, feet and transmission for heavy duty operations.
- 302 AISI Stainless steel bowl - 20 lt. capacity.
- Water protected planetary system (IP55 electrical controls, IP23 overall machine).
- 3 fixed speeds: 40, 80 and 160 rpm.
- Power: 1500 watts.
- The solid safety screen and the stainless steel wire structure are both removable and dismantled for cleaning and are dishwasher safe.
- Adjustable feet for perfect stability.
- Electronic speed variator (10 speeds available from 30 to 175 rpm)

## Included Accessories

| | |
|---|---|
| • 1 of Bowl 20 lt | PNC 650121 |
| • 1 of Spiral Hook 20 lt | PNC 653114 |
| • 1 of Paddle 20 lt | PNC 653116 |
| • 1 of Reinforced whisk 20 lt (for heavy duty use) | PNC 653254 |

## Optional Accessories

| | |
|---|---|
| • Bowl 20 lt | PNC 650121 ❑ |
| • 10 lt reduction kit (bowl, spiral hook, paddle, whisk) for 20 lt planetary mixers | PNC 650122 ❑ |
| • Whisk 20 lt | PNC 653109 ❑ |
| • Spiral Hook 20 lt | PNC 653114 ❑ |

- Paddle 20 lt PNC 653116 ❑
- Reinforced whisk 20 lt (for heavy duty use) PNC 653254 ❑
- Kit wheels for 20/30/40 litre planetary mixers (only XB models) PNC 653552 ❑



The company reserves the right to make modifications to the products without prior notice. All information correct at time of printing.

# Planetary Mixers
# Planetary Mixer for Bakery, 20 lt. - Electronic

Front

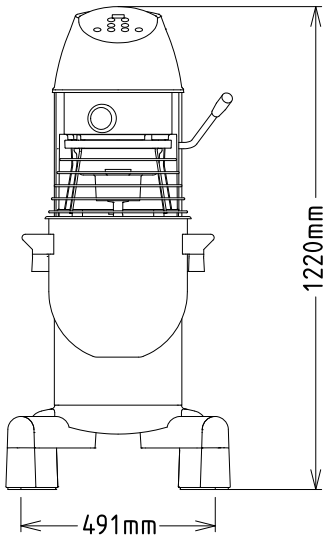


Side

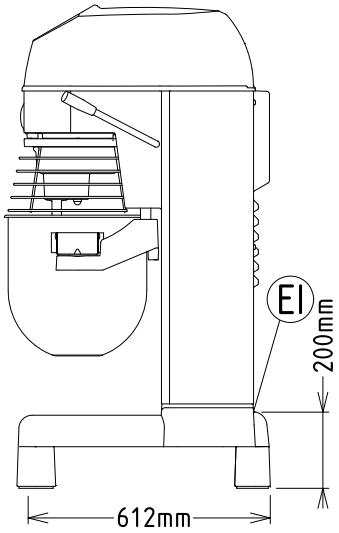


**EI** = Electrical inlet (power)

Top

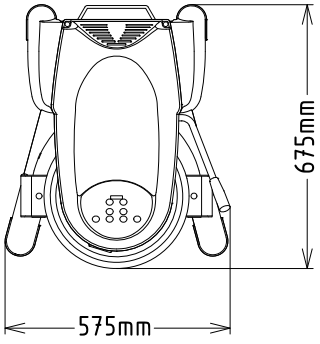


| | |
|---|---|
| **Electric** | |
| **Supply voltage:** | 200-240 V/1N ph/50/60 Hz |
| **Electrical power, max:** | 1.5 kW |
| **Total Watts:** | 1.5 kW |
| **Capacity:** | |
| **Performance (up to):** | 7 kg/Cycle |
| **Capacity:** | 20 litres |
| **Key Information:** | |
| **External dimensions, Width:** | 575 mm |
| **External dimensions, Depth:** | 675 mm |
| **External dimensions, Height:** | 1220 mm |
| **Shipping weight:** | 111 kg |
| **Cold water paste:** | 7 kg with Spiral hook |
| **Egg whites:** | 32 with Whisk |



The company reserves the right to make modifications to the products without prior notice. All information correct at time of printing.

2026.11.20