ITEM #

MODEL #

NAME #

SIS #

AIA #

Planetary Mixers
Planetary Mixer for Bakery, 40 lt. - Electronic + hub



600172 (DMBE40AB)

40 lt planetary mixer, bowl detection device and SOLID BPA free safety screen, with 3 fixed speeds and variable speed. Equipped with spiral hook, paddle, whisk and attachment hub type H. Suitable for bakery preparations

Short Form Specification

Item No.

Suitable for bakery and pastry making, for kneading, blending and whipping operations. Reinforced body for heavy duty use with 18/8 (AISI 302) 40 litre capacity stainless steel bowl. Reinforced transmission and powerful asynchronous motor (2200W) with 3 fixed speeds (40,80,160 rpm) and electronic variable speed (from 30 to 175 rpm). Water proof (IP55) and flat touch button control panel with a timer from 0-59 min. Removable/transparent solid safety screen - made of a bisphenol-A free (BPA) copolyester. Removable and dismantled solid safety screen and stainless steel wire structure. Kneading: speed 1 or 2 with hook; Blending: speed 2 with paddle; Whipping: speed 3 with whisk. Bowl detection device allows the mixer to switch on only when the bowl and the safety screen are properly installed and positioned together. Equipped with accessory drive hub type H (accessories are not included). Supplied with 3 tools: spiral hook, paddle and reinforced whisk.

APPROVAL:

Main Features

- Delivered with:
  - Spiral Hook, Paddle, Wire Whisk and Mixing Bowl for 40 lt.
  - Accessory drive hub (accessories are not included).
- Emulsifying speed: "3" with whisk.
- Raising and lowering of the bowl controlled by lever with an automatic locking of the bowl when in the raised position.
- Kneading speed: "1" with hook.
- Mixing speed: "2" with paddle.
- Waterproof touch button control panel with timer, speed setting and display.
- Professional beater mixer designed to withstand the strong demands of bakery and pastry making.
- Maximum capacity (flour, with 60% of hydration) 10 kg.
- Solid BPA-free safety screen, covering the stainless steel wire one, limits the flour and unsafe dust particles when used in bakery and pastry preparation.
- Removable chute to add ingredients while working included as standard.
- Bowl detection device allows the mixer to switch on only when the bowl and the solid safety screen are properly installed and positioned together.

Construction

- 3 fixed speeds: 40, 80 and 160 rpm.
- 302 AISI Stainless steel bowl - 40 lt. capacity.
- Water protected planetary system (IP55 electrical controls, IP23 overall machine).
- Electronic speed variator (10 speeds available from 30 to 175 rpm)
- Reinforced body, feet and transmission for heavy duty operations.
- Power: 2200 watts.
- Alluminium accesory hub positioned on the left side of the head of the planetary mixer.
- The solid safety screen and the stainless steel wire structure are both removable and dismantled for cleaning and are dishwasher safe.
- Adjustable feet for perfect stability.

Included Accessories

- 1 of Bowl 40 lt for MB/MBE models — PNC 650128
- 1 of Spiral Hook 40 lt for MB/MBE models — PNC 653092
- 1 of Paddle 40 lt for MB/MBE models — PNC 653093
- 1 of Whisk 40 lt, reinforced (for heavy duty use) for MB/MBE planetary mixers — PNC 653127

Optional Accessories

• 20 lt reduction kit (bowl, spiral hook, paddle, whisk) for 40 lt planetary mixers - bakery models	PNC 650126	❑
• Bowl 40 lt for MB/MBE models	PNC 650128	❑
• Bowl scraper 40 lt	PNC 650186	❑
• Spiral Hook 40 lt for MB/MBE models	PNC 653092	❑
• Paddle 40 lt for MB/MBE models	PNC 653093	❑
• Fine Whisk 40 lt for MB/MBE planetary mixers (for emulsions)	PNC 653094	❑
• Whisk 40 lt, reinforced (for heavy duty use) for MB/MBE planetary mixers	PNC 653127	❑
• Puree strainer for H hub supplied with 1 screw and 3 grids of 1.5, 3 and 6 mm	PNC 653187	❑
• Vegetable cutter, attachment type H, disconnectable drive, for planetary mixers	PNC 653225	❑
• Bowl trolley for 40/60/80 lt planetary mixers	PNC 653585	❑
• Aluminium external support for 70 mm meat mincer (includes tray and pusher) - H HUB - To be combined with a meat mincer kit	PNC 653720	❑
• Aluminium meat mincer kit 70 mm - Enterprise cut, includes blade (3 discs, diam. 4.5 - 6 and 8 mm)	PNC 653721	❑
• Stainless steel meat mincer kit 70 mm - Enterprise cut, includes blade (3 discs, diam. 4.5 - 6 and 8 mm)	PNC 653722	❑
• Stainless steel meat mincer kit 70 mm - 1/2 Unger cut, includes blade (4 discs, diam. 0, 3 - 4.5 and 8 mm)	PNC 653723	❑
• Aluminium external support for 82 mm meat mincer (includes tray and pusher) - H HUB - To be combined with a meat mincer kit	PNC 653724	❑
• Stainless steel meat mincer kit 82 mm - Enterprise cut, includes blade (3 discs, diam. 4.5 - 6 and 8 mm)	PNC 653725	❑
• Aluminium meat mincer kit 82 mm - Enterprise cut, includes blade (3 discs, diam. 4.5 - 6 and 8 mm)	PNC 653726	❑
• Stainless steel meat mincer kit 82 mm - 1/2 Unger cut, includes blade (4 discs, diam. 0, 3 - 4.5 and 8 mm)	PNC 653727	❑

The company reserves the right to make modifications to the products without prior notice. All information correct at time of printing.

2026.11.20

Planetary Mixers
Planetary Mixer for Bakery, 40 lt. - Electronic + hub

Front

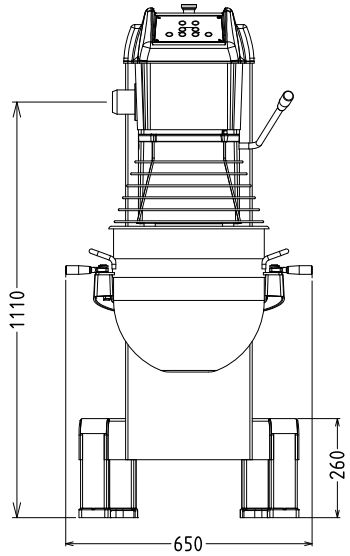

Side

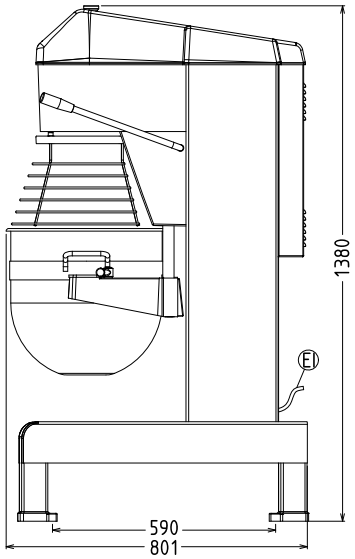

EI = Electrical inlet (power)

Top

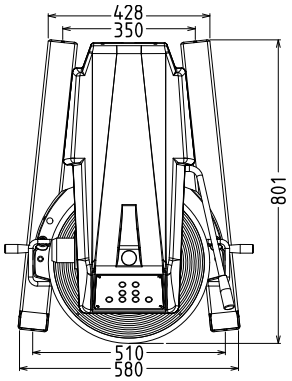

Electric

Supply voltage:	200-240 V/1N ph/50/60 Hz
Electrical power, max:	2.2 kW
Total Watts:	2.2 kW

Capacity:

Performance (up to):	10 kg/Cycle
Capacity:	40 litres

Key Information:

External dimensions, Width:	655 mm
External dimensions, Depth:	850 mm
External dimensions, Height:	1370 mm
Cold water paste:	ISO 9001; ISO 14001 kg with Spiral hook
Egg whites:	70 with Whisk

The company reserves the right to make modifications to the products without prior notice. All information correct at time of printing.

2026.11.20