ITEM #

MODEL #

NAME #

SIS #

AIA #

Planetary Mixers
Planetary Mixer for Bakery, 40 lt. - Electronic



600175 (DMBE40B)	40 lt planetary mixer, bowl detection device and SOLID BPA free safety screen, with 3 fixed speeds and electronic variable speed. Equipped with spiral hook, paddle and whisk. Suitable for bakery preparation
600176 (DMBE40B3)	40 lt planetary mixer, bowl detection device and SOLID BPA free safety screen, with 3 fixed speeds and electronic variable speed. Equipped with spiral hook, paddle and whisk. Suitable for bakery preparation

Short Form Specification

Item No.

Suitable for bakery and pastry making, for kneading, blending and whipping operations. Reinforced body for heavy duty use with 18/8 (AISI 302) 40 litre capacity stainless steel bowl. Reinforced transmission and powerful asynchronous motor (2200W) with 3 fixed speeds (40,80,160 rpm) and electronic variable speed (from 30 to 175 rpm). Water proof (IP55) and flat touch button control panel with a timer from 0-59 min. Removable/transparent solid safety screen - made of a bisphenol-A free (BPA) copolyester. Removable and dismantled solid safety screen and stainless steel wire structure. Bowl detection device allows the mixer to switch on only when the bowl and the safety screen are properly installed and positioned together. Kneading: speed 1 or 2 with hook; Blending: speed 2 with paddle; Whipping: speed 3 with whisk. Supplied with 3 tools: spiral hook, paddle and reinforced whisk.

Main Features

- Maximum capacity (flour, with 60% of hydration) 10 kg.
- Professional beater mixer designed to withstand the strong demands of bakery and pastry making.
- Delivered with: - Spiral Hook, Paddle, Reinforced Whisk and Mixing Bowl for 40 lt
- Kneading speed: "1" with hook.
- Mixing speed: "2" with paddle.
- Emulsifying speed: "3" with whisk.
- Raising and lowering of the bowl controlled by lever with an automatic locking of the bowl when in the raised position.
- Waterproof touch button control panel with timer, speed setting and display.
- Solid BPA-free safety screen, covering the stainless steel wire one, limits the flour and unsafe dust particles when used in bakery and pastry preparation.
- Removable chute to add ingredients while working included as standard.
- Bowl detection device allows the mixer to switch on only when the bowl and the solid safety screen are properly installed and positioned together.

Construction

- Reinforced body, feet and transmission for heavy duty operations.
- 302 AISI Stainless steel bowl - 40 lt. capacity.
- Water protected planetary system (IP55 electrical controls, IP23 overall machine).
- 3 fixed speeds: 40, 80 and 160 rpm.
- Electronic speed variator (10 speeds available from 30 to 175 rpm)
- Power: 2200 watts.
- The solid safety screen and the stainless steel wire structure are both removable and dismantled for cleaning and are dishwasher safe.
- Adjustable feet for perfect stability.

Included Accessories

- 1 of Bowl 40 lt for MB/MBE models — PNC 650128
- 1 of Spiral Hook 40 lt for MB/MBE models — PNC 653092
- 1 of Paddle 40 lt for MB/MBE models — PNC 653093
- 1 of Whisk 40 lt, reinforced (for heavy duty use) for MB/MBE planetary mixers — PNC 653127

Optional Accessories

APPROVAL:

- 40 lt planetary mixer, bowl detection device and SOLID BPA free safety screen, with 3 fixed speeds and electronic variable speed. Equipped with spiral hook, paddle and whisk. Suitable for bakery preparation (only for 600175) — PNC 600175 ❑
- 20 lt reduction kit (bowl, spiral hook, paddle, whisk) for 40 lt planetary mixers - bakery models — PNC 650126 ❑
- Bowl 40 lt for MB/MBE models — PNC 650128 ❑
- Bowl scraper 40 lt — PNC 650186 ❑
- Spiral Hook 40 lt for MB/MBE models — PNC 653092 ❑
- Paddle 40 lt for MB/MBE models — PNC 653093 ❑
- Fine Whisk 40 lt for MB/MBE planetary mixers (for emulsions) — PNC 653094 ❑
- Whisk 40 lt, reinforced (for heavy duty use) for MB/MBE planetary mixers — PNC 653127 ❑
- Bowl trolley for 40/60/80 lt planetary mixers — PNC 653585 ❑

The company reserves the right to make modifications to the products without prior notice. All information correct at time of printing.

Planetary Mixers
Planetary Mixer for Bakery, 40 lt. - Electronic

Front

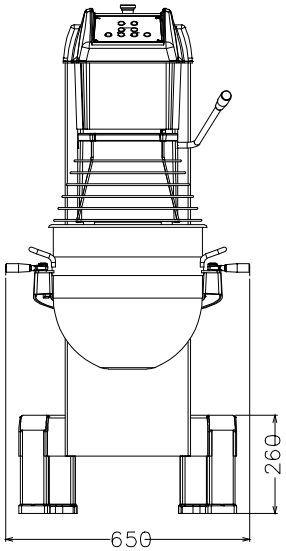

Side

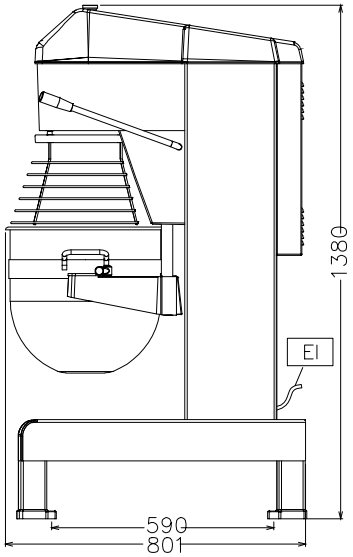

EI = Electrical inlet (power)

Top

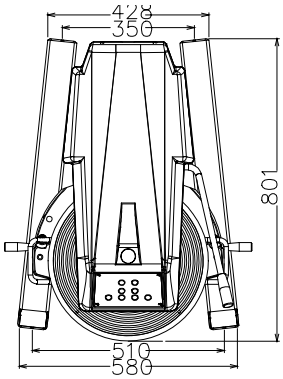

Electric

Supply voltage:	
600175 (DMBE40B)	200-240 V/1N ph/50/60 Hz
600176 (DMBE40B3)	380-480 V/3 ph/50/60 Hz

Capacity:

Performance (up to):	10 kg/Cycle
Capacity:	40 litres

Key Information:

External dimensions, Width:	655 mm
External dimensions, Depth:	850 mm
External dimensions, Height:	1370 mm
Shipping weight:	203 kg
Cold water paste:	ISO 9001; ISO 14001 kg with Spiral hook
Egg whites:	70 with Whisk

The company reserves the right to make modifications to the products without prior notice. All information correct at time of printing.

2026.11.20