ITEM #

MODEL #

NAME #

SIS #

AIA #

Vegetable Slicer Potato Chipper with automatic hopper



603431 (DRC143)	High output potato chipper with automatic hopper (up to 1500 kg/ hour)
603432 (DRC14)	High output potato chipper with automatic hopper (up to 1500 kg/ hour)

Short Form Specification

Item No.

Body and drum in corrosion resistant material. Automatic hopper and cutter block in stainless steel. Easily removable drum and block. Hopper incorporates a safety plate which allows only the potatoes to pass through and not the operator's hand. The machine will immediately stop if the hopper is opened during operation or if the cutter block is not properly fitted.

APPROVAL:

Main Features

- Chipping block for french fries, with different cross section sizes (8x8,10x10,12x12 & 14x14 mm).
- Table top model, stainless steel mobile stand available as accessory.
- Drum and block are easy to remove
- Safety device incorporated in the hopper, allowing only the potatoes to pass through.
- Immediate arrest of the machine in case of hopper opening or incorrect fitting of the cutter block during operation.
- Productivity is around 1500 kg/h for cross section 12x12 mm.
- Maximum diameter of potatoes 8cm.

Construction

- Body and drum in corrosion resistant material.
- Automatic hopper and cutter block made in stailess steel.

Optional Accessories

- Stainless steel mobile stand. Height: 730 mm — PNC 653017 ❑
- 14 mm chipping block for potato chipper — PNC 653018 ❑
- 8 mm chipping block for potato chipper — PNC 653022 ❑
- 10 mm chipping block for potato chipper — PNC 653023 ❑
- 12 mm chipping block for potato chipper — PNC 653024 ❑
- Stainless steel trolley suitable to hold one 2/1 GN container (GN container not included) — PNC 653224 ❑
- 4mm cutting block for potato chipper — PNC 653503 ❑
- 6 mm cutting block for potato chipper — PNC 653504 ❑
- 8 mm cutting block for potato chipper — PNC 653505 ❑

Vegetable Slicer
Potato Chipper with automatic hopper

Front

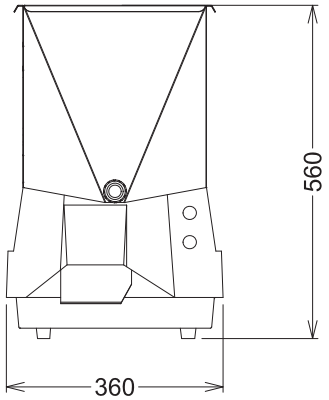

Side

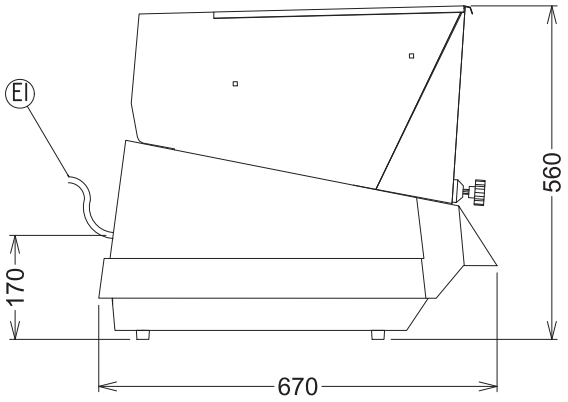

EI = Electrical inlet (power)

Top

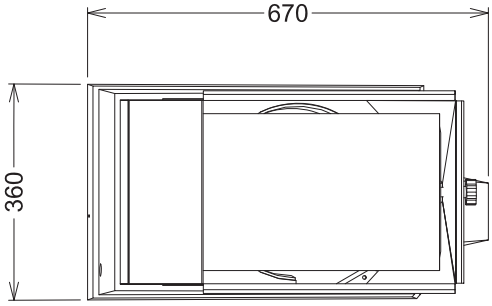

Electric

Supply voltage:	
603431 (DRC143)	230/400 V/3 ph/50 Hz
603432 (DRC14)	220-240 V/1N ph/50 Hz

Capacity:

Chip cutting capacity:	1500 kg
Performance (up to):	0 kg/Cycle
Potatoes slicing capacity:	1500 kg

Key Information:

External dimensions, Width:	360 mm
External dimensions, Depth:	670 mm
External dimensions, Height:	560 mm
Shipping weight:	44 kg

The company reserves the right to make modifications to the products without prior notice. All information correct at time of printing.

2026.11.24