ITEM #

MODEL #

NAME #

SIS #

AIA #

Bread slicers
Stainless Steel Electric Bread Slicer



601589 (DCPXF215) Single-chute electric bread slicer. Hourly output up to 14000 slices

Short Form Specification

Item No.

Single chute stainless steel electric bread slicer. Touch button control panel. Original and unique safety device ensures the user does not touch the blade, especially during cleaning operations. The blade is immobilized and covered when the bread evacuation door is raised. Simply insert the bread into the vertical spout and cutting begins automatically as soon as the machine is started. Flat and waterproof touch button control panel. Thickness of slices can be adjusted from 8 to 60 mm. Hourly output: 7000 to 14000 slices (i.e. 116 / 232 mm).

APPROVAL:

Main Features

- Electric bread slicer useful in all catering establishments which require high product output.
- Blade designed to avoid bread crushing thus allowing excellent slice presentation.
- The cutting process begins automatically once the bread is inserted into the vertical spout.
- Loaves may be cut into slices between 8 and 60 mm of thickness depending on setting.
- Touch button control panel with pulse and start/stop push buttons.
- Safety device ensures operator protection, particularly during cleaning operations.
- Motor shuts off when chute door is raised.
- Hourly output of 7.000 and 14.000 slices, suitable from 50 to 500 meals per service.

Construction

- Single stainless steel chute.

Optional Accessories

- Table with shelf and 1/1 GN tray PNC 653180 ❑

Bread slicers
Stainless Steel Electric Bread Slicer

Bread slicers
Stainless Steel Electric Bread Slicer

Front

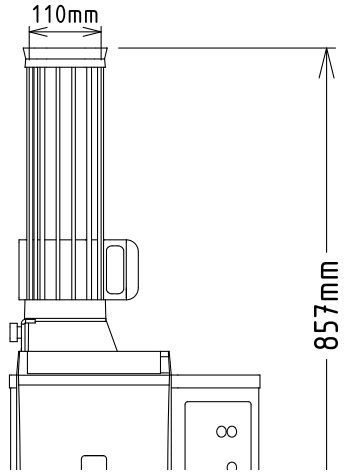

Side

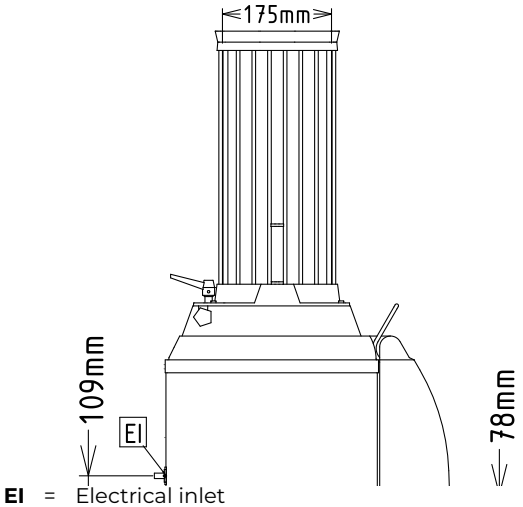

EI = Electrical inlet (power)

Top

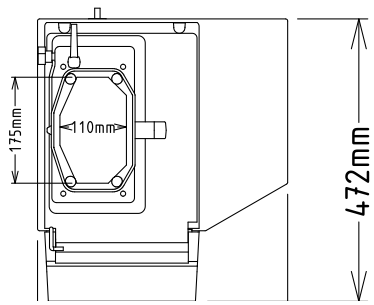

Electric

Supply voltage:	220-240 V/1N ph/50 Hz
Total Watts:	0.37 kW

Key Information:

External dimensions, Width:	472 mm
External dimensions, Depth:	418 mm
External dimensions, Height:	857 mm
Net weight (kg):	ISO 9001; ISO 14001

The company reserves the right to make modifications to the products without prior notice. All information correct at time of printing.

2026.11.20