ITEM #

MODEL #

NAME #

SIS #

AIA #

Planetary Mixers
Stainless Steel Planetary Mixer, 30 lt - Electronic with Hub



600170 (DXBE30AXB)

30 lt stainless steel planetary mixer, bowl detection device and SOLID BPA free safety screen, with electronic speed variation. Equipped with spiral hook, paddle, whisk and H type accessory hub, with electronic speed variation. Equipped with spiral hook, paddle, whisk and H type accessory hub

Short Form Specification

Item No.

Floor model, suitable for all kneading, blending and whipping operations. Body in stainless steel with 18/8 (AISI 302) 30 litre capacity stainless steel bowl. Powerful asynchronous motor (1100 W) with an electronic speed variator (10 speed levels from 30 to 180 rpm). Water protected planetary system. Removable and dismantled solid safety screen and stainless steel wire structure. Removable/transparent solid safety screen - made of a bisphenol-A free (BPA) copolyester. Bowl detection device allows the mixer to switch on only when the bowl and the safety screen are properly installed and positioned together. Water proof (IP55) and flat touch button control panel with timer (60 min), which switches off the machine at the end of the cycle. Start/stop button. Adjustable feet for stability. Equipped with accessory drive hub type H (accessories are not included). Supplied with 3 tools: spiral hook, paddle and whisk.

APPROVAL:

Main Features

- Professional beater mixer that provides all the basic mixer functions: kneading of all sort of pastes, mixing of semi-liquid products, emulsions and various sauces.
- Delivered with: - Spiral Hook, Paddle, Whisk and Mixing Bowl for 30 lt - Accessory drive hub (accessories are not included)
- Waterproof touch button control panel with timer, speed setting and display.
- Electronic speed variator.
- Maximum capacity (flour, with 60% of hydration) 7 kg, suitable for 100-300 meals per service.
- Raising and lowering of the bowl controlled by lever with an automatic locking of the bowl when in the raised position.
- Solid BPA-free safety screen, covering the stainless steel wire one, limits the flour and unsafe dust particles when used in bakery and pastry preparation.
- Removable chute to add ingredients while working included as standard.
- Bowl detection device allows the mixer to switch on only when the bowl and the solid safety screen are properly installed and positioned together.

Construction

- Body entirely in stainless steel.
- 302 AISI Stainless steel bowl - 30 lt. capacity.
- Asynchronous motor with high start-up torque.
- 10 speeds from 30 to 180 rpm (planetary movement), to adjust to the selected tool and mixture hardness.
- Water protected planetary system (IP55 electrical controls, IP34 appliance overall).
- Planetary movement based on self lubricating gears, eliminating any risk of leaks.
- Power: 1100 watts.
- The solid safety screen and the stainless steel wire structure are both removable and dismantled for cleaning and are dishwasher safe.
- Adjustable feet for perfect stability.

Included Accessories

• 1 of Bowl 30 lt mixer	PNC 650123
• 1 of Spiral Hook 30 lt	PNC 653161
• 1 of Paddle 30 lt	PNC 653165
• 1 of Whisk 30 lt	PNC 653166

Optional Accessories

• Bowl 30 lt mixer	PNC 650123 ❑
• 10 lt reduction kit (bowl, spiral hook, paddle, whisk) and removable spout for 30 lt planetary mixers	PNC 650124 ❑

• 20 lt reduction kit (bowl, spiral hook, paddle, whisk) for 30 lt planetary mixers	PNC 650125	❑
• Spiral Hook 30 lt	PNC 653161	❑
• Paddle 30 lt	PNC 653165	❑
• Whisk 30 lt	PNC 653166	❑
• Puree strainer for H hub supplied with 1 screw and 3 grids of 1.5, 3 and 6 mm	PNC 653187	❑
• Vegetable cutter, attachment type H, disconnectable drive, for planetary mixers	PNC 653225	❑
• Reinforced Whisk 30 lt (for heavy duty use)	PNC 653253	❑
• Kit wheels for 20/30/40 litre planetary mixers (only XB models)	PNC 653552	❑
• Bowl trolley for 30 lt planetary mixers (cannot be used with wheel kit 653552)	PNC 653562	❑
• Aluminium external support for 70 mm meat mincer (includes tray and pusher) - H HUB - To be combined with a meat mincer kit	PNC 653720	❑
• Aluminium meat mincer kit 70 mm - Enterprise cut, includes blade (3 discs, diam. 4.5 - 6 and 8 mm)	PNC 653721	❑
• Stainless steel meat mincer kit 70 mm - Enterprise cut, includes blade (3 discs, diam. 4.5 - 6 and 8 mm)	PNC 653722	❑
• Stainless steel meat mincer kit 70 mm - 1/2 Unger cut, includes blade (4 discs, diam. 0, 3 - 4.5 and 8 mm)	PNC 653723	❑

The company reserves the right to make modifications to the products without prior notice. All information correct at time of printing.

Planetary Mixers
Stainless Steel Planetary Mixer, 30 lt - Electronic with Hub

Front

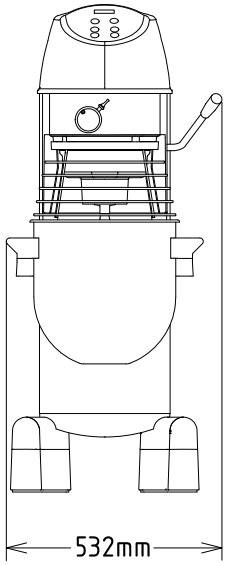

Side

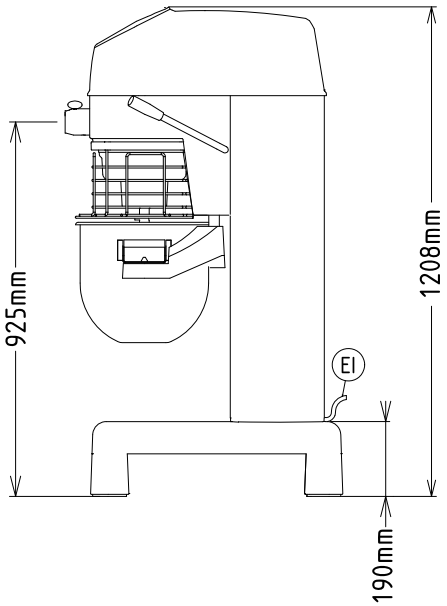

EI = Electrical inlet (power)

Top

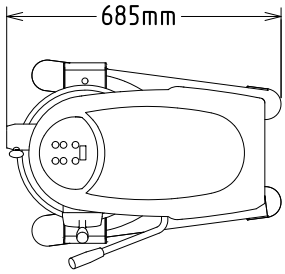

Electric	
Supply voltage:	200-240 V/1N ph/50/60 Hz
Electrical power, max:	1.1 kW
Total Watts:	1.1 kW
Capacity:	
Performance (up to):	7 kg/Cycle
Capacity:	30 litres
Key Information:	
External dimensions, Width:	532 mm
External dimensions, Depth:	685 mm
External dimensions, Height:	1208 mm
Shipping weight:	114 kg
Cold water paste:	7 kg with Spiral hook
Egg whites:	50 with Whisk

The company reserves the right to make modifications to the products without prior notice. All information correct at time of printing.

2026.11.20