ITEM #

MODEL #

NAME #

SIS #

AIA #

Vegetable Slicer
TR210 Vegetable Slicer Motor block only - 2 Speeds



602231 (TR210)

Motor block for vegetable slicer, 2 speeds 340-680 rpm (hopper not included)

Short Form Specification

Item No.

For catering facilities, up to 1000 meals per service, specially designed for cuts of vegetables. 2 speeds vegetable slicer (340 and 680 rpm). "No volt release" safety device. Self-braking motor. On/off switch on the body of the machine. Table top version. Motor block only, hopper not included. Add standard lever operated hopper and/or long vegetable hopper and discs/grids to operate the appliance.

APPROVAL:

Main Features

- Motor block only: lever-operated or automatic and/or long vegetable hopper and discs/grids need to be added to operate the appliance.
- Suitable for 100-800 meals for table service and up to 1000 meals for catering service.
- Optional automatic hopper with 5/6kg capacity for continuous feed available.
- High flexibility and ergonomy thanks to the available optional accessories.
- Smart design trolley to place the unit and the 2/1 GN tray to collect cut veggies, to maximize productivity and grant effortless operation (optional).
- Vegetable slicer with slicing, grating, shredding (julienne) as well as dicing and French fries cutting capability.
- Complete and wide selection of blades and grids available (diam. 205 mm).
- Lever operated hopper (including long vegetable and half moon hoppers) to reach the maximum precision in the result (optional).

Construction

- Power: 750 watts.
- 2 speeds: 340-680 rpm.
- Asynchronous silent industrial motor for heavy duty and longer life.
- Discs (available on request) are made in stainless steel and dishwasher safe.

Optional Accessories

- Stainless steel trolley for TR210 with 1/1 GN tray rails (GN tray not included) PNC 650065 ❑
- Stainless steel shredding disc with S-blades 4x4 mm PNC 650077 ❑
- Stainless steel shredding disc with S-blades 6x6 mm (can also be used for French fries) PNC 650078 ❑
- Stainless steel shredding disc with S-blades 8x8 mm (can also be used for French fries) PNC 650079 ❑
- Stainless steel shredding disc with S-blades 10x10 mm (can also be used for French fries) PNC 650080 ❑
- Stainless steel pressing/slicing disc with corrugated S-blades 2 mm (can be used for slicing or combined with grids) PNC 650089 ❑
- Stainless steel pressing/slicing disc with corrugated S-blades 3 mm (can be used for slicing or combined with grids) PNC 650090 ❑
- Stainless steel pressing/slicing disc with corrugated S-blades 6 mm (can be used for slicing or combined with grids) PNC 650091 ❑

• Stainless steel lever-operated hopper for TR210 (no cutting chamber, no ejector)	PNC 650094	❑
• Stainless steel long vegetable hopper with 4 tubes different sizes with pusher (no cutting chamber, no ejector) for TR210	PNC 650109	❑
• Cleaning tool for TRS, TRK & TR210 5-8-10 mm dicing grids	PNC 650110	❑
• Dicing set 10x10x10mm (10mm aluminum slicing pressing disc with 205mm diam. and 10mm grid)	PNC 650112	❑
• Aluminum pressing/slicing disc with straight blades 10 mm - for dicing	PNC 650115	❑
• Aluminum pressing/slicing disc with straight blades 8 mm - for dicing	PNC 650116	❑
• Stainless steel shredding disc with S-blades 2x8 mm	PNC 650158	❑
• Stainless steel shredding disc with S-blades 2x10 mm	PNC 650159	❑
• Stainless steel pressing/slicing disc with corrugated S-blades 8 mm (can be used for slicing or combined with grids)	PNC 650162	❑
• Stainless steel pressing/slicing disc with corrugated S-blades 10 mm (can be used for slicing or combined with grids)	PNC 650164	❑
• Stainless steel shredding disc with S-blades 2x2 mm	PNC 650166	❑
• Stainless steel shredding disc with S-blades 3x3 mm	PNC 650167	❑
• Dicing grid 5x5 mm	PNC 653566	❑
• Dicing grid 8x8 mm	PNC 653567	❑
• Dicing grid 10x10 mm	PNC 653568	❑
• Dicing grid 12x12 mm	PNC 653569	❑
• Dicing grid 20x20 mm	PNC 653570	❑
• Grid for chips 6x6 mm	PNC 653571	❑
• Grid for chips 8x8 mm	PNC 653572	❑
• Grid for chips 10x10 mm	PNC 653573	❑
• Support for 1 disc, diam. 175mm and 205mm	PNC 653632	❑
• Ejector disc	PNC 653772	❑
• Stainless steel grating disc 2 mm	PNC 653773	❑
• Stainless steel grating disc 3 mm	PNC 653774	❑
• Stainless steel grating disc 4 mm	PNC 653775	❑
• Stainless steel grating disc 7 mm	PNC 653776	❑
• Stainless steel grating disc 9 mm	PNC 653777	❑
• Stainless steel grating disc for knoedeln and bread	PNC 653778	❑
• Stainless steel grating disc for parmesan and bread	PNC 653779	❑
• Stainless steel automatic hopper tr210 (no cutting chamber, no ejector) dim (w)450 (d)416 (h) 450mm + agitator	PNC 653884	❑

The company reserves the right to make modifications to the products without prior notice. All information correct at time of printing.

Vegetable Slicer
TR210 Vegetable Slicer Motor block only - 2 Speeds

Front

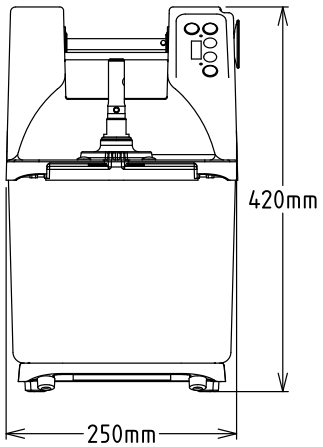

Side

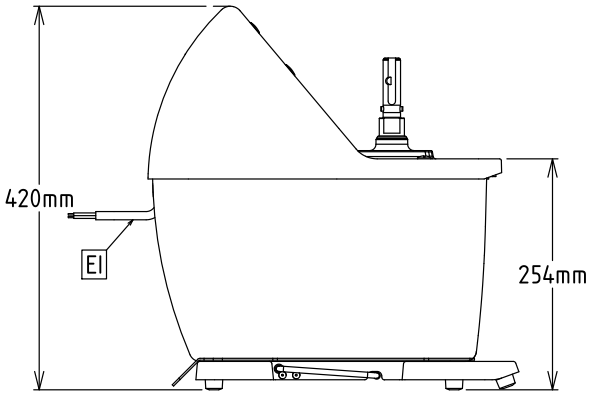

EI = Electrical inlet (power)

Top

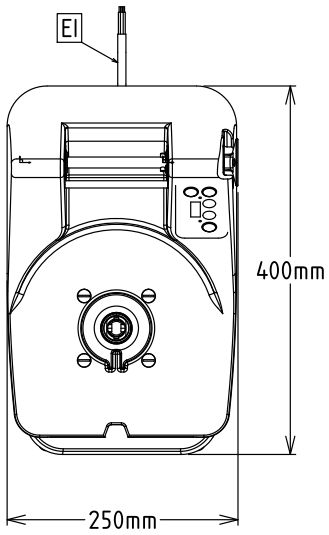

Electric

Supply voltage:	380-415/380-440 V/3 ph/50/60 Hz
Electrical power, max:	0.75 kW
Total Watts:	0.75 kW

Capacity:

Performance (up to):	2100 kg/Cycle

Key Information:

External dimensions, Width:	400 mm
External dimensions, Depth:	250 mm
External dimensions, Height:	420 mm
Shipping weight:	34.7 kg

The company reserves the right to make modifications to the products without prior notice. All information correct at time of printing.

2026.11.25