ITEM #

MODEL #

NAME #

SIS #

AIA #

Vegetable Slicer
TR260 Vegetable Slicer - 1 Speed

Paddle



603429 (DTR260F1V) Universal vegetable slicer for catering use, motor unit, ejector included. 1 speed 330 rpm

Short Form Specification

Item No.

Universal vegetable slicer for caterers serving 400 to 600 meals/sitting. 1 speed (330 rpm). 1500W self-braking motor. Stainless steel motor housing and aluminium basement. "No volt release" safety device. Touch button control panel with on/off and pulse function. Cutting disc diam. 300mm. Automatic hopper, lever-operated hopper, long vegetable hopper and cabbage hopper available upon request. The touch button control panel has IP55 protection with low voltage level.

APPROVAL:

Main Features

- Suitable for up to 600 meals for table service and up to 2000 meals for catering service.
- Vegetable slicer with slicing, grating, shredding (julienne) as well as dicing and French fries cutting capability.
- Continuous feed model.
- Available upon request: -Automatic hopper (dia=280 mm), lever-operated hopper, long vegetable hopper (3 tubes) and cabbage hopper.
- Available as option a long vegetable accessory to fit in the lever operated hopper converting it into a long vegetable hopper (3 cylindrical hoppers: 50, 59,5, 70 mm diameter)
- Optional stainless steel mobile stand accessory.
- "No volt release" safety device.
- Complete selection of blades and dicing grids available (diameter 300 mm).
- Magnetic safety system and motor brake. Prevents machine from running when lever swings away or is open.
- Pulse function for precise cutting.

Construction

- Power: 1500 watts.
- 1 speed: 330 rpm
- Stainless steel motor housing with aluminum basement.
- Capacity depending on the hopper: - lever hopper: 700kg/h - automatic hopper: 2500kg/h

Optional Accessories

- Feed tray to be combined with cabbage hopper and long vegetable hopper PNC 650036 ❑
- Stainless steel grating disc for parmesan (dia. 300 mm) PNC 650148 ❑
- Stainless steel grating disc for knoedeln (dia. 300 mm) PNC 650149 ❑
- Stainless steel grating disc 2 mm (dia. 300 mm) PNC 650150 ❑
- Stainless steel grating disc 3 mm (dia. 300 mm) PNC 650151 ❑
- Stainless steel grating disc 4 mm (dia. 300 mm) PNC 650152 ❑

- Stainless steel grating disc 7 mm (dia. 300 mm) PNC 650153 ❑
- Stainless steel grating disc 9 mm (dia. 300 mm) PNC 650154 ❑
- Stainless steel cabbage grating disc with central shaft for stem removal 7 mm - to be combined with cabbage hopper PNC 650157 ❑
- Cabbage slicing disc with central shaft for stem removal 1 mm (to be used with cabbage feed hopper) PNC 653009 ❑
- Stainless steel mobile stand. Height: 730 mm PNC 653017 ❑
- Lever-operated hopper for TR260 (including feed tray) PNC 653036 ❑
- Automatic feed hopper for TR260 PNC 653037 ❑
- Large hopper for TR260, diam. 280mm PNC 653048 ❑
- Dicing grid 10 mm for TR260 PNC 653051 ❑
- Dicing grid 16 mm for TR260 PNC 653052 ❑
- Dicing grid 20 mm for TR260 PNC 653053 ❑
- Dicing grid 25 mm for TR260 PNC 653054 ❑
- Dicing grid 32 mm for TR260 PNC 653055 ❑
- Slicing disc 2 mm (dia. 300 mm) PNC 653172 ❑
- Slicing disc 3 mm (dia. 300 mm) PNC 653173 ❑
- Slicing disc 1 mm (dia. 300 mm) PNC 653188 ❑
- Slicing disc 5 mm (dia. 300 mm) PNC 653189 ❑
- Slicing disc 6 mm (dia. 300 mm) PNC 653190 ❑
- Slicing disc 8 mm (dia. 300 mm) PNC 653191 ❑
- Slicing disc 10 mm (dia. 300 mm) PNC 653192 ❑
- Slicing disc 16 mm (dia. 300 mm) PNC 653193 ❑
- Shredding disc 2x2 mm (dia. 300 mm) PNC 653195 ❑
- Shredding disc 3x3 mm (dia. 300 mm) PNC 653196 ❑
- Shredding disc 4x4 mm (dia. 300 mm) PNC 653197 ❑
- Shredding disc 6x6 mm (can also be used for chips - dia. 300 mm) PNC 653198 ❑
- Shredding disc 8x8 mm (can also be used for chips - dia. 300 mm) PNC 653199 ❑
- Shredding disc 10x10mm (can also be used for chips - dia. 300 mm) PNC 653200 ❑
- Stainless steel disc rack for 300 dia. discs (to be fitted on the mobile stand basement) PNC 653212 ❑
- Disc with corrugated blades 2 mm (dia. 300 mm) PNC 653217 ❑
- Disc with corrugated blades 3 mm (dia. 300 mm) PNC 653218 ❑
- Disc with corrugated blades 6 mm (dia. 300 mm) PNC 653219 ❑
- Long vegetable accessory for TR260 lever-operated hopper (to change the lever-operated hopper into long vegetable hopper) PNC 653223 ❑
- Stainless steel trolley suitable to hold one 2/1 GN container (GN container not included) PNC 653224 ❑
- Cabbage slicing disc with central shaft for stem removal 2 mm (to be used with cabbage feed hopper) PNC 653227 ❑
- Cabbage slicing disc with central shaft for stem removal 3 mm (to be used with cabbage feed hopper) PNC 653228 ❑
- Dicing grid 12 mm for TR260 PNC 653301 ❑
- Long vegetable hopper with 3 tubes diam. 50 to 70 mm for TR260 PNC 653306 ❑

The company reserves the right to make modifications to the products without prior notice. All information correct at time of printing.

2026.11.24

Vegetable Slicer
TR260 Vegetable Slicer - 1 Speed

Front

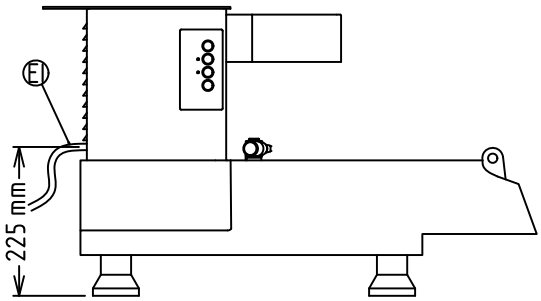

Side

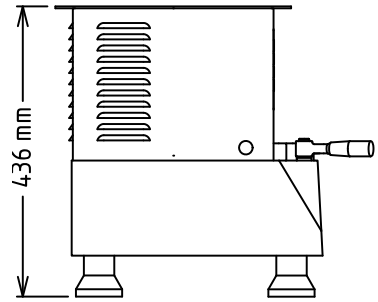

EI = Electrical inlet (power)

Top

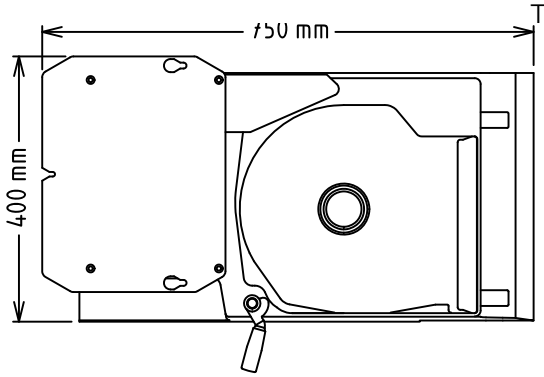

Electric	
Supply voltage:	220-240 V/1N ph/50 Hz
Electrical power, max:	1.5 kW
Total Watts:	1.5 kW
Capacity:	
Performance (up to):	2500 kg/Cycle
Key Information:	
External dimensions, Width:	750 mm
External dimensions, Depth:	400 mm
External dimensions, Height:	440 mm
Shipping weight:	60 kg

The company reserves the right to make modifications to the products without prior notice. All information correct at time of printing.

2026.11.24