ITEM #

MODEL #

NAME #

SIS #

AIA #

Vegetable Slicer TR300 Vegetable Cutter with Motor Unit, Ejector & Stand



602068 (DTR300B)

Vegetable slicer for catering use. Motor unit with ejector (for all types of work except chips) and stand (hopper not included).

Short Form Specification

Item No.

Vegetable preparation machine for caterers serving more than 600 meals/sitting. Freestanding 1 speed (260 rpm) motor unit, includes the standard ejector used in all types of preparations except chips (the ejector for chips is available as an option). 2 different hoppers available upon request: automatic hopper, for all vegetables except long; long vegetable hopper with 9 tubes in various sizes for cutting long vegetables horizontally when in an upright position.

APPROVAL:

Main Features

- Vegetable slicer with slicing, grating, shredding (julienne) as well as dicing and French fries cutting capability.
- Includes the standard ejector used in all types of preparations except chips.
- Motor base delivered on stand, including disks rack.
- Available upon request: -Automatic hopper for regular vegetable feeding. Suitable for all types of preparation with the exception of long vegetables. -Long vegetable hopper to cut long vegetables into horizontal slices (9 tubes).
- Specific chip equipment (6, 8, 10 mm size) to be used with the proper chip ejector disc.
- Complete selection of blades and grids available (diameter 300 mm).
- Maximum vegetable size is 75 mm diameter with automatic hopper.
- Capacity from 600 meals upwards for table service and up to 5000 for catering service.

Construction

- Motor base equipped with external device to easily lift the hoppers during operations.
- Three phase motor
- Power: 1500 watts.
- 1 speed model.

Vegetable Slicer
TR300 Vegetable Cutter with Motor Unit, Ejector & Stand

Included Accessories

- 1 of Ejector for all types of work (except chips) PNC 653142

Optional Accessories

- Stainless steel grating disc for parmesan (dia. 300 mm) PNC 650148 ❑
- Stainless steel grating disc for knoedeln (dia. 300 mm) PNC 650149 ❑
- Stainless steel grating disc 2 mm (dia. 300 mm) PNC 650150 ❑
- Stainless steel grating disc 3 mm (dia. 300 mm) PNC 650151 ❑
- Stainless steel grating disc 4 mm (dia. 300 mm) PNC 650152 ❑
- Stainless steel grating disc 7 mm (dia. 300 mm) PNC 650153 ❑
- Stainless steel grating disc 9 mm (dia. 300 mm) PNC 650154 ❑
- Stainless steel cabbage grating disc with central shaft for stem removal 7 mm - to be combined with cabbage hopper PNC 650157 ❑
- Dicing grid 10 mm for TR300 PNC 653068 ❑
- Chip equipment 10 x 10 mm PNC 653069 ❑
- Dicing grid 20 mm for TR300 PNC 653073 ❑
- Chip equipment 8 x 8 mm PNC 653074 ❑
- Dicing grid 16 mm for TR300 PNC 653075 ❑
- Chip equipment 6 x 6 mm PNC 653076 ❑
- Long vegetable hopper with 9 tubes different sizes for TR300 PNC 653129 ❑
- Ejector for all types of work (except chips) PNC 653142 ❑
- Ejector for chips (to be used with the chip equipment) PNC 653143 ❑
- Slicing disc 2 mm (dia. 300 mm) PNC 653172 ❑
- Slicing disc 3 mm (dia. 300 mm) PNC 653173 ❑
- Slicing disc 1 mm (dia. 300 mm) PNC 653188 ❑
- Slicing disc 5 mm (dia. 300 mm) PNC 653189 ❑
- Slicing disc 6 mm (dia. 300 mm) PNC 653190 ❑
- Slicing disc 8 mm (dia. 300 mm) PNC 653191 ❑
- Slicing disc 10 mm (dia. 300 mm) PNC 653192 ❑
- Slicing disc 16 mm (dia. 300 mm) PNC 653193 ❑
- Shredding disc 2x2 mm (dia. 300 mm) PNC 653195 ❑
- Shredding disc 3x3 mm (dia. 300 mm) PNC 653196 ❑
- Shredding disc 4x4 mm (dia. 300 mm) PNC 653197 ❑
- Shredding disc 6x6 mm (can also be used for chips - dia. 300 mm) PNC 653198 ❑
- Shredding disc 8x8 mm (can also be used for chips - dia. 300 mm) PNC 653199 ❑
- Shredding disc 10x10mm (can also be used for chips - dia. 300 mm) PNC 653200 ❑
- Stainless steel disc rack for 300 dia. discs (to be fitted on the mobile stand basement) PNC 653212 ❑
- Disc with corrugated blades 2 mm (dia. 300 mm) PNC 653217 ❑
- Disc with corrugated blades 3 mm (dia. 300 mm) PNC 653218 ❑
- Disc with corrugated blades 6 mm (dia. 300 mm) PNC 653219 ❑
- Stainless steel trolley suitable to hold one 2/1 GN container (GN container not included) PNC 653224 ❑
- Dicing grid 32 mm for TR300 PNC 653259 ❑
- Dicing grid 12 mm for TR300 PNC 653499 ❑
- Automatic hopper for TR300 PNC 653771 ❑

The company reserves the right to make modifications to the products without prior notice. All information correct at time of printing.

2026.11.18

Vegetable Slicer
TR300 Vegetable Cutter with Motor Unit, Ejector & Stand

Front

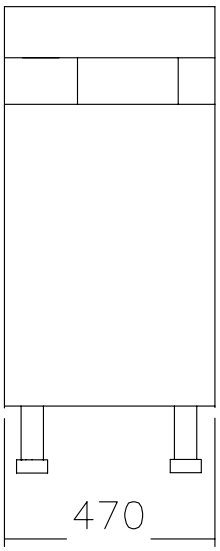

Side

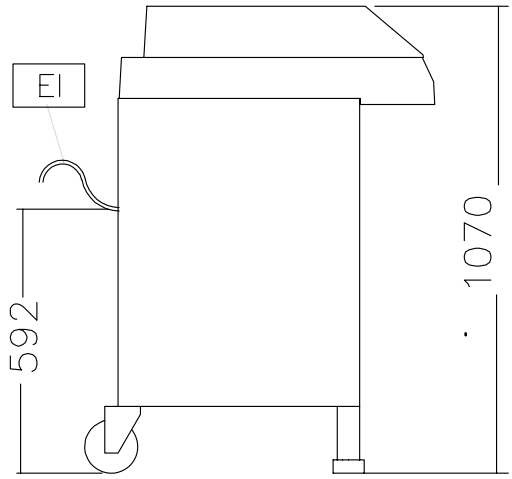

EI = Electrical inlet (power)

Top

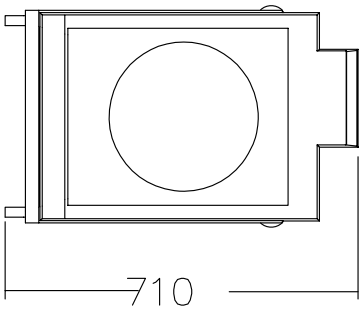

Electric	
Supply voltage:	220-240/380-415 V/3 ph/50 Hz
Electrical power, max:	1.5 kW
Total Watts:	1.5 kW
Capacity:	
Performance (up to):	4000 kg/Cycle
Key Information:	
External dimensions, Width:	470 mm
External dimensions, Depth:	710 mm
External dimensions, Height:	1070 mm
Shipping weight:	103 kg

The company reserves the right to make modifications to the products without prior notice. All information correct at time of printing.

2026.11.18