ITEM #

MODEL #

NAME #

SIS #

AIA #

Vegetable Slicer TRK70 Cutter Slicer - 7 LT - Variable Speed - UK Plug



600439 (DTRK70YG)

Combined cutter/ vegetable slicer, variable speed 300 to 3700 rpm. Supplied with 7 lt stainless steel cutter bowl and lever operated feed hopper (UK)

Short Form Specification

Item No.

3 in 1 machine: cutter, emulsifier and slicer to slice, grate, liquidise, mix and mince in a matter of seconds. Easily change from vegetable slicer to food processor without any tool. All parts in contact with food are removable, dismountable and dw safe. Incly system to change the motor base orientation (20°) to facilitate loading and unloading operations with the vegetable slicer attachment. Vegetable slicer attachment: Universal vegetable slicer offering about 80 different types of cuts. Long vegetable hopper (55,5mm diameter) integrated in the wide 3/4 moon stainless steel round hopper (215cm²). User-friendly stainless steel lever (better pressure control, with less effort for arms and shoulder), designed for right and left handed users. High discharge zone (up to 20cm) for GN containers. Automatic start/stop function will stop the machine when the lever hopper is lifted and will restart automatically when lowered. Cutter-mixer: Stainless steel 7 litre bowl with unique design for mixing both large or small quantities. Unique high chimney increases the real capacity of the bowl (use up to 75% of nominal capacity). Transparent lid to check consistency of food and to eventually add ingredients without having to open the lid. Hinged cover, when lifted, remains open to permit a fast and easy check of preparation. Ergonomic and easily dismountable scraper, in heavy duty composite material, for better homogenization. Micro toothed blades in 420 AISI stainless steel. Multiple safety devices ensure the machine will only operate when the cover is properly closed and all parts are correctly positioned. Asynchronous industrial motor for heavy duty and longer life. Flat and waterproof control panel with on/off button, pulse function and variable speed (from 300 to 3700 rpm). UK plug

APPROVAL:

Vegetable Slicer TRK70 Cutter Slicer - 7 LT - Variable Speed - UK Plug

Vegetable Slicer TRK70 Cutter Slicer - 7 LT - Variable Speed - UK Plug

Main Features

- 3 in 1 machine: cutter, emulsifier and vegetable slicer to slice, grate, liquidise, mix and mince in a matter of seconds.
- Incly system to incline motor base at 20° to better fit the vegetable slicer attachment.
- Vegetable slicer with slicing, grating, shredding (julienne) as well as dicing and French fries cutting capability.
- Long vegetables round hopper integrated in the feed arm, 3/4 moon roundish hopper to limit pre cutting operations.
- Emulsifier function (scraper) included as standard.
- Base fixed cover for a better handling.
- Pulse function for coarse chopping.
- All parts in contact with food are removable without the use of tools, completely dismountable and dishwasher safe.
- Automatic restart of the machine with the 3/4 moon shaped pusher in position.
- Magnetic safety system and motor brake. Prevents machine from running when vegetable preparation lever and/or hopper are lifted or when cutter lid is not properly closed.
- Automatic speed limitation according to the selected function (slicer or cutter).
- Complete and wide selection of blades and grids available (diam. 205 mm).
- Delivered with: - Stainless steel lever operated feed hopper - 7 lt stainless steel cutter bowl, transparent lid, scraper and microtoothed blade rotor
- Capacity: - vegetable slicer productivity 550 kg/h, suitable for 100-400 meals for table service, up to 800 meals for catering service - cutter mixer working capacity from 150 g to 3.5 kg, for 50-150 meals per service

Construction

- Asynchronous industrial motor with no brushes for high reliability and quiet functioning, stainless steel motor shaft.
- All blades (available on request) are made in stainless steel and dishwasher safe.
- Stainless steel bowl has a high chimney to ensure high productivity also when processing liquids.
- Feeding arm and hopper are made entirely in stainless steel. Aluminum motor housing.
- Vegetable cutting at 4 speeds up to 800 rpm. Food processing at 10 variable speeds: 300-3700 rpm.
- IP24 throughout entire machine.
- Power: 1.3 HP.
- IPX5 (IP55) waterproof, flat, touch-control panel.
- Compact and portable design.
- Improved ventilation system to manage smoothly heavy duty use.
- Improved incly system for better stability.
- Improved fixing of long vegetable hopper pusher.

The company reserves the right to make modifications to the products without prior notice. All information correct at time of printing.

2026.11.25

Vegetable Slicer TRK70 Cutter Slicer - 7 LT - Variable Speed - UK Plug

Included Accessories

- 1 of Lid and bowl scraper for 7 lt cutter mixer — PNC 650104
- 1 of Stainless steel bowl for 7 lt cutter mixer — PNC 653593
- 1 of Ejector disc — PNC 653772
- 1 of Microtoothed blade rotor for 7 lt cutter mixer — PNC 653874

Optional Accessories

- Stainless steel shredding disc with S-blades 4x4 mm — PNC 650077 ❑
- Stainless steel shredding disc with S-blades 6x6 mm (can also be used for French fries) — PNC 650078 ❑
- Stainless steel shredding disc with S-blades 8x8 mm (can also be used for French fries) — PNC 650079 ❑
- Stainless steel shredding disc with S-blades 10x10 mm (can also be used for French fries) — PNC 650080 ❑
- Stainless steel pressing/slicing disc with corrugated S-blades 2 mm (can be used for slicing or combined with grids) — PNC 650089 ❑
- Stainless steel pressing/slicing disc with corrugated S-blades 3 mm (can be used for slicing or combined with grids) — PNC 650090 ❑
- Stainless steel pressing/slicing disc with corrugated S-blades 6 mm (can be used for slicing or combined with grids) — PNC 650091 ❑
- Lid and bowl scraper for 7 lt cutter mixer — PNC 650104 ❑
- Cleaning tool for TRS, TRK & TR210 5-8-10 mm dicing grids — PNC 650110 ❑
- Dicing set 10x10x10mm (10mm aluminum slicing pressing disc with 205mm diam. and 10mm grid) — PNC 650112 ❑
- Aluminum pressing/slicing disc with straight blades 10 mm - for dicing — PNC 650115 ❑
- Aluminum pressing/slicing disc with straight blades 8 mm - for dicing — PNC 650116 ❑
- Stainless steel shredding disc with S-blades 2x8 mm — PNC 650158 ❑
- Stainless steel shredding disc with S-blades 2x10 mm — PNC 650159 ❑
- Stainless steel pressing/slicing disc with corrugated S-blades 8 mm (can be used for slicing or combined with grids) — PNC 650162 ❑
- Stainless steel pressing/slicing disc with corrugated S-blades 10 mm (can be used for slicing or combined with grids) — PNC 650164 ❑
- Stainless steel shredding disc with S-blades 2x2 mm — PNC 650166 ❑
- Stainless steel shredding disc with S-blades 3x3 mm — PNC 650167 ❑
- Stainless steel work table with folding shelves and disk rack for TRK, TRS and TR210 table top models — PNC 653283 ❑
- Dicing grid 5x5 mm — PNC 653566 ❑
- Dicing grid 8x8 mm — PNC 653567 ❑
- Dicing grid 10x10 mm — PNC 653568 ❑
- Dicing grid 12x12 mm — PNC 653569 ❑
- Dicing grid 20x20 mm — PNC 653570 ❑
- Grid for chips 6x6 mm — PNC 653571 ❑
- Grid for chips 8x8 mm — PNC 653572 ❑
- Grid for chips 10x10 mm — PNC 653573 ❑
- Stainless steel bowl for 7 lt cutter mixer — PNC 653593 ❑
- Support for 1 disc, diam. 175mm and 205mm — PNC 653632 ❑
- Ejector disc — PNC 653772 ❑
- Stainless steel grating disc 2 mm — PNC 653773 ❑
- Stainless steel grating disc 3 mm — PNC 653774 ❑
- Stainless steel grating disc 4 mm — PNC 653775 ❑
- Stainless steel grating disc 7 mm — PNC 653776 ❑
- Stainless steel grating disc 9 mm — PNC 653777 ❑
- Stainless steel grating disc for knoedeln and bread — PNC 653778 ❑
- Stainless steel grating disc for parmesan and bread — PNC 653779 ❑
- Smooth blade rotor for 7 lt cutter mixer — PNC 653881 ❑
- Microtooth blade rotor (emulsifier) for 7 lt cutter mixer — PNC 653882 ❑

The company reserves the right to make modifications to the products without prior notice. All information correct at time of printing.

2026.11.25

Vegetable Slicer
TRK70 Cutter Slicer - 7 LT - Variable Speed - UK Plug

Front

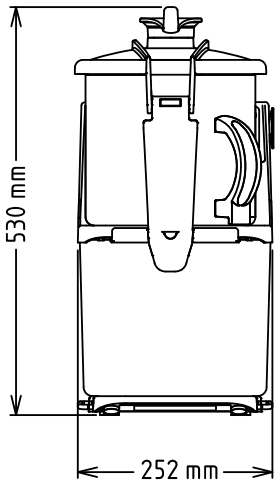

Side

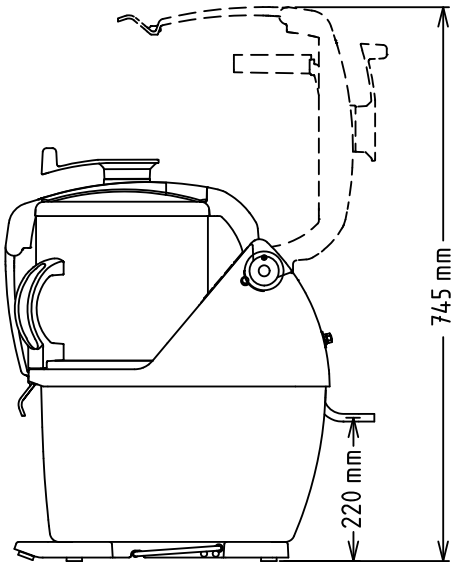

EI = Electrical inlet (power)

Top

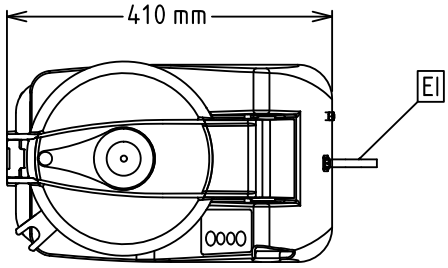

Electric	
Supply voltage:	200-240 V/1N ph/50/60 Hz
Capacity:	
Performance (up to):	550 kg/Cycle
Capacity:	7 litres
Key Information:	
External dimensions, Width:	252 mm
External dimensions, Depth:	485 mm
External dimensions, Height:	505 mm
Shipping weight:	ISO 9001; ISO 14001 kg

The company reserves the right to make modifications to the products without prior notice. All information correct at time of printing.

2026.11.25