ITEM #

MODEL #

NAME #

SIS #

AIA #

Vegetable Slicer
TRS Classic Vegetable Slicer with Ejector - 1 Speed - 750W



600108 (DTRSCX)

Vegetable slicer, 1 speed 340 rpm, 750 W. Lever operated hopper in polished cast aluminum with stainless steel base

Short Form Specification

Item No.

Universal vegetable preparation machine for 80 different types of cuts. Stainless steel case. Removable cover and feed arm in polished cast aluminium with incorporated magnetic safety device which only allows the vegetable slicer to operate if the hopper is closed. No volt release system. Self braking motor.

APPROVAL:

Main Features

- Base inclined at 20° to provide easy loading and unloading.
- Complete and wide selection of blades and grids available (diam. 205 mm).
- Automatic restart of the machine with the half-moon lever in position.
- Continuous feed model.
- Hopper easily removed for cleaning.
- Magnetic safety system and motor brake. Prevents machine from running when lever swings away or is open.
- Vegetable slicer with slicing, grating, shredding (julienne) as well as dicing and French fries cutting capability.
- Plate speed at 360 RPM for precise cutting, slicing and dicing.
- Suitable for 100-300 meals for table service and up to 600 meals for catering service.
- Ergonomically design to work frontally and to reduce the working space around the machine.

Construction

- Asynchronous industrial motor with no brushes for high reliability and quiet functioning, stainless steel motor shaft.
- Compact and portable design.
- IP55 waterproof ON/OFF buttons, IP24 throughout the entire machine.
- Power: 750 watts.

Optional Accessories

- Stainless steel shredding disc with S-blades 4x4 mm — PNC 650077 ❑
- Stainless steel shredding disc with S-blades 6x6 mm (can also be used for French fries) — PNC 650078 ❑
- Stainless steel shredding disc with S-blades 8x8 mm (can also be used for French fries) — PNC 650079 ❑
- Stainless steel shredding disc with S-blades 10x10 mm (can also be used for French fries) — PNC 650080 ❑
- Stainless steel pressing/slicing disc with corrugated S-blades 2 mm (can be used for slicing or combined with grids) — PNC 650089 ❑
- Stainless steel pressing/slicing disc with corrugated S-blades 3 mm (can be used for slicing or combined with grids) — PNC 650090 ❑
- Stainless steel pressing/slicing disc with corrugated S-blades 6 mm (can be used for slicing or combined with grids) — PNC 650091 ❑
- Cleaning tool for TRS, TRK & TR210 5-8-10 mm dicing grids — PNC 650110 ❑
- Dicing set 10x10x10mm (10mm aluminum slicing pressing disc with 205mm diam. and 10mm grid) — PNC 650112 ❑
- Aluminum pressing/slicing disc with straight blades 10 mm - for dicing — PNC 650115 ❑
- Aluminum pressing/slicing disc with straight blades 8 mm - for dicing — PNC 650116 ❑
- Stainless steel shredding disc with S-blades 2x8 mm — PNC 650158 ❑
- Stainless steel shredding disc with S-blades 2x10 mm — PNC 650159 ❑
- Stainless steel pressing/slicing disc with corrugated S-blades 8 mm (can be used for slicing or combined with grids) — PNC 650162 ❑
- Stainless steel pressing/slicing disc with corrugated S-blades 10 mm (can be used for slicing or combined with grids) — PNC 650164 ❑
- Stainless steel shredding disc with S-blades 2x2 mm — PNC 650166 ❑
- Stainless steel shredding disc with S-blades 3x3 mm — PNC 650167 ❑
- Table with shelf and 1/1 GN tray — PNC 653180 ❑
- Stainless steel work table with folding shelves and disk rack for TRK, TRS and TR210 table top models — PNC 653283 ❑
- Dicing grid 5x5 mm — PNC 653566 ❑
- Dicing grid 8x8 mm — PNC 653567 ❑
- Dicing grid 10x10 mm — PNC 653568 ❑
- Dicing grid 12x12 mm — PNC 653569 ❑
- Dicing grid 20x20 mm — PNC 653570 ❑
- Grid for chips 6x6 mm — PNC 653571 ❑
- Grid for chips 8x8 mm — PNC 653572 ❑
- Grid for chips 10x10 mm — PNC 653573 ❑
- Support for 1 disc, diam. 175mm and 205mm — PNC 653632 ❑

The company reserves the right to make modifications to the products without prior notice. All information correct at time of printing.

2026.11.25

Vegetable Slicer
TRS Classic Vegetable Slicer with Ejector - 1 Speed - 750W

Front

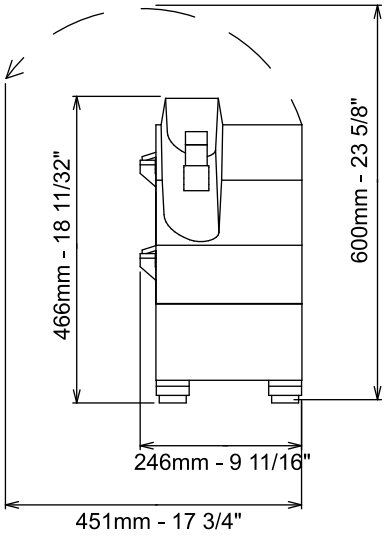

Side

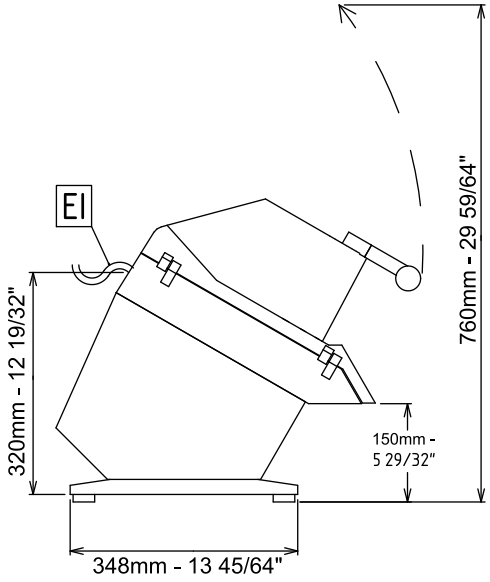

EI = Electrical inlet (power)

Top

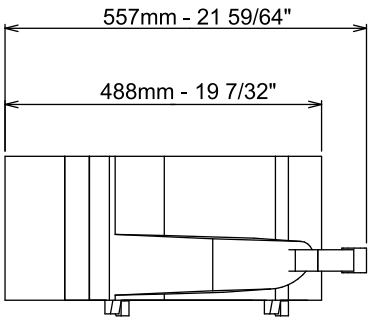

Electric	
Supply voltage:	220-240 V/1N ph/50 Hz
Electrical power, max:	0.75 kW
Total Watts:	0.75 kW
Capacity:	
Performance (up to):	550 kg/Cycle
Key Information:	
External dimensions, Width:	246 mm
External dimensions, Depth:	557 mm
External dimensions, Height:	466 mm
Shipping weight:	26 kg

The company reserves the right to make modifications to the products without prior notice. All information correct at time of printing.

2026.11.25