ITEM #

MODEL #

NAME #

SIS #

AIA #

Vegetable Slicer
TRS Vegetable Slicer - 1 Speed - 500W



600420 (DTRSY1VI)	Vegetable slicer, 1 speed 340 rpm, 500 W. Lever operated hopper in stainless steel for intense use (CB certification) - Schuko plug
600422 (DTRSY1V3I)	Vegetable slicer, 1 speed 340 rpm, 500 W. Lever operated hopper in stainless steel for intense use (CB certification) - cord no plug

Short Form Specification

Item No.

Universal vegetable slicer for more than 80 different types of cuts, thanks to several stainless steel dw safe discs.
Parts in contact with food - stainless steel lever, stainless steel hopper and cutting chamber - can be removed without tools and placed in a dishwasher for fast cleaning.
Compact and ergonomic design, user-friendly lever (better pressure control, with less effort for arms and shoulder), designed for right and left handed users.
Angled base (20°) facilitates loading and unloading operations. Long vegetable hopper (55,5mm diameter), integrated in the wide 3/4 moon round hopper (215cm²) in stainless steel. Asynchronous industrial motor for heavy duty and longer life. High discharge zone (up to 20cm) for GN containers. Pulse control for precise slicing. Automatic start/stop function will stop the machine when the lever hopper is lifted and will restart automatically when lowered. Waterproof (IP55) control panel and aluminium alloy motor base completely closed for complete protection against strong jets of water.

APPROVAL:

Main Features

- Suitable for 100-400 meals for table service and up to 800 meals for catering service.
- Vegetable slicer with slicing, grating, shredding (julienne) as well as dicing and French fries cutting capability.
- Ergonomically designed for right and left-handed users, frontal working and to reduce working space around the machine.
- All parts in contact with food are removable without the use of tools, stainless steel hopper, stainless steel lever and cutting chamber are dishwasher safe.
- Hopper easily removed for cleaning.
- Base inclined at 20° to provide easy loading and unloading.
- High discharge zone permits the use of deep GN containers (up to 20cm).
- Complete and wide selection of blades and grids available (diam. 205 mm).
- Pulse function for precise cutting.
- Magnetic safety system and motor brake. Prevents machine from running when lever swings away or is open.
- Automatic restart of the machine with the 3/4 moon shaped pusher in position.
- Continuous feed model.
- Red OFF, green ON buttons.
- Delivered with: - All stainless steel vegetable prep attachment with a lever-integrated long vegetable hopper (55,5mm diameter) and a large round hopper (215cm²)

Construction

- All blades (available on request) are made in stainless steel and dishwasher safe.
- Power: 500 W - single or three-phase.
- 1 speed - 340 rpm - for precise cutting, slicing and dicing.
- Compact and portable design.
- Asynchronous silent industrial motor for heavy duty and longer life.
- Feeding arm and hopper are made entirely in stainless steel. Aluminum motor housing.
- Improved ventilation system to manage smoothly heavy duty use.
- Main on/off switch for added safety.
- Reinforced basement and feet to withstand the continuous movements of the unit.
- Improved fixing of long vegetable hopper pusher.
- Main switch ON/OFF on the back of the appliance.

Included Accessories

- 1 of Ejector disc PNC 653772

Optional Accessories

Vegetable Slicer
TRS Vegetable Slicer - 1 Speed - 500W

Front

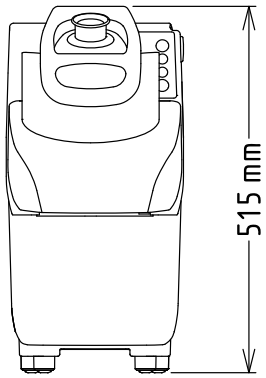

Side

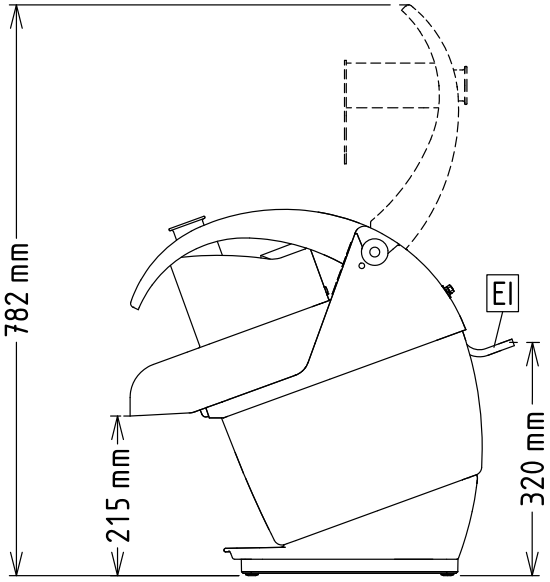

EI = Electrical inlet (power)

Top

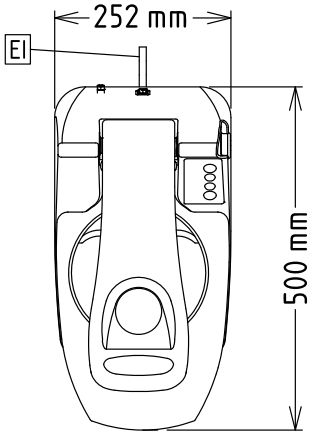

Electric

Supply voltage:	
600420 (DTRSY1VI)	220-240 V/1N ph/50 Hz
600422 (DTRSY1V3I)	200-240/380-440 V/3 ph/50/60 Hz
Electrical power, max:	0.5 kW
Total Watts:	0.5 kW

Capacity:

Performance (up to):	550 kg/Cycle

Key Information:

External dimensions, Width:	252 mm
External dimensions, Depth:	500 mm
External dimensions, Height:	515 mm
Shipping weight:	
600420 (DTRSY1VI)	24 kg
600422 (DTRSY1V3I)	22 kg

The company reserves the right to make modifications to the products without prior notice. All information correct at time of printing.

2026.11.25