ITEM #

MODEL #

NAME #

SIS #

AIA #

Vegetable Washer Tilting Basket Vegetable Washer 14/70kg



660036 (LV500R) Vegetable washer with tilting well capacity 500 lt, charge for cycle: 14/70 Kg

Short Form Specification

Item No.

Made from 304 AISI stainless steel. Double inclined well bottom to allow automatic cleaning. Washing system by water vortex; multiple diffuser for uniform water vortex; automatic water filling. The lifting of the basket at the end of the washing cycle is achieved by a reliable and safe linear motor controlled by double push button with alarm. IP25 water protection.
Well capacity: 500 lt. Load per cycle: 14 kg (light vegetables); 70 kg (heavy vegetables). Cycle duration: 2-3 min.

APPROVAL:

Main Features

- Double inclined well bottom to allow automatic cleaning of the unit.
- Washing well shaped to achieve an efficient water vortex.
- Basket lifting at the end of the cycle achieved by means of a linear motor controlled by a double push button with alarm.
- "Soft-action" manual ball valve regulates the wash water loading and pressure.
- Multiple diffuser to uniform water vortex and a solenoid valve to expedite water loading and drainage.
- Simple control panel with emergency stop an acoustic alarm switch.
- Cycle duration of 2 to 3 minutes.
- Mounted on adjustable stainless steel legs.
- IP25 protection against water jets, solid objects and small animals (larger than 6 mm).

Construction

- 304 AISI stainless steel construction throughout.
- Wells to have a capacity of 14 kg of light vegetables or 70 kg of heavy vegetables per cycle.

Vegetable Washer Tilting Basket Vegetable Washer 14/70kg

Vegetable Washer
Tilting Basket Vegetable Washer 14/70kg

Front

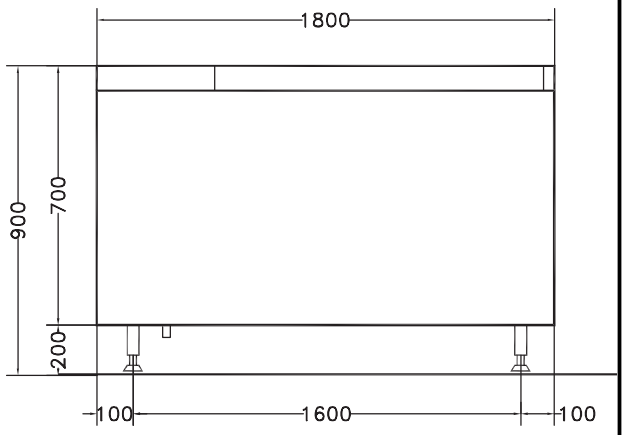

Side

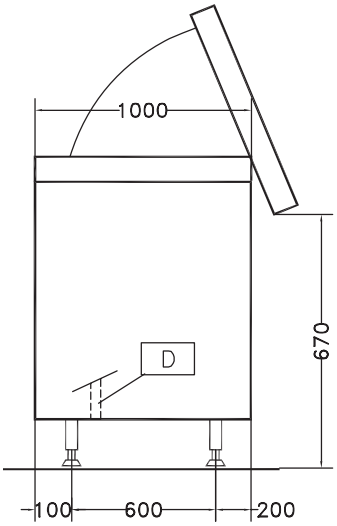

CWI1 = Cold Water inlet 1 (cleaning)
D = Drain
EI = Electrical inlet (power)

Top

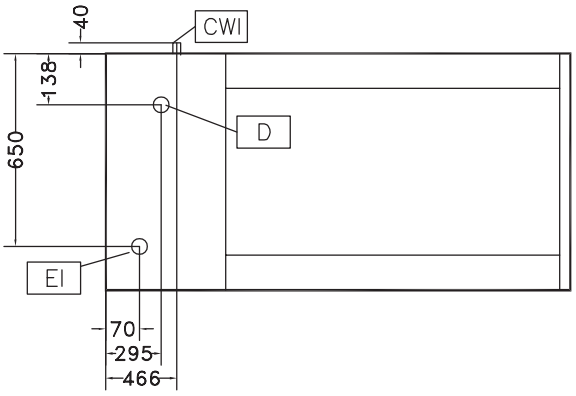

Electric

Total Watts:	1.6 kW

Key Information:

External dimensions, Width:	1800 mm
External dimensions, Depth:	1000 mm
External dimensions, Height:	850 mm
Shipping weight:	296 kg
Usable well capacity:	500 lt
Load per cycle - light vegetables:	14 kg
Load per cycle - heavy vegetables:	70 kg

The company reserves the right to make modifications to the products without prior notice. All information correct at time of printing.

2026.11.20