ITEM #

MODEL #

NAME #

SIS #

AIA #

# Turbo Liquidizers
# Turbo Liquidiser for Soups - 1 speed (1600 rpm)



**603794 (DTBM150-01)** Stainless steel turbo liquidiser 1 speed (soup) with micro liquidiser

## Short Form Specification

Item No.

For mixing, liquidising, reducing and emulsifying. Constructed entirely in 18/8 stainless steel. Mounted on a mobile stainless steel trolley. Can be adapted to all recipient shapes: cylindrical, rectangular, etc. The mixer tube is easily removable without tools and can be dismantled in separate parts: tube, shaft, bearing, and rotor. No volt release system. Safety device in non-working position and protective ring for the grinding head. 1 speed motor: 1600 rpm. Stainless steel micro liquidiser for fish soup available as an option. Supplied with stainless steel micro liquidiser for kitchen use.

APPROVAL:

## Main Features

- Used to mix, blend and emulsify vegetable and soups, fruit and vegetable purées, liquid pastries, sauces and much more directly in cooking pots/containers.
- Liquidiser is mounted on a mobile stainless steel trolley and is height adjustable on installation.
- Turbine accelerates the flow of the liquid over the impeller providing a greater throughput and finer grinding.
- Safety device allows the machine to start only when it is in a working position.
- Equipped with protective ring to cover grinding head.
- Suggested for deep and low pans containing between 500 and 1000 liter of liquid.

## Construction

- Power: 3000 watts.
- IP55 electrical controls and IP34 overall machine.
- Constructed entirely in stainless steel to offer maximum durability.
- 1 speed: 1600 rpm.

## Included Accessories

- 1 of Stainless steel micro liquidiser for TBM150 (kitchen) PNC 653243

## Optional Accessories

- Stainless steel micro liquidiser for TBM150 (fish soup) PNC 650043 ❑
- Stainless steel micro liquidiser for TBM150 (kitchen) PNC 653243 ❑

# Turbo Liquidizers
# Turbo Liquidiser for Soups - 1 speed (1600 rpm)

Front

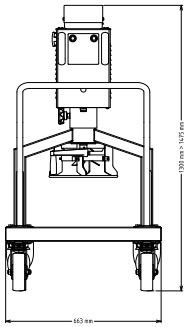

Side

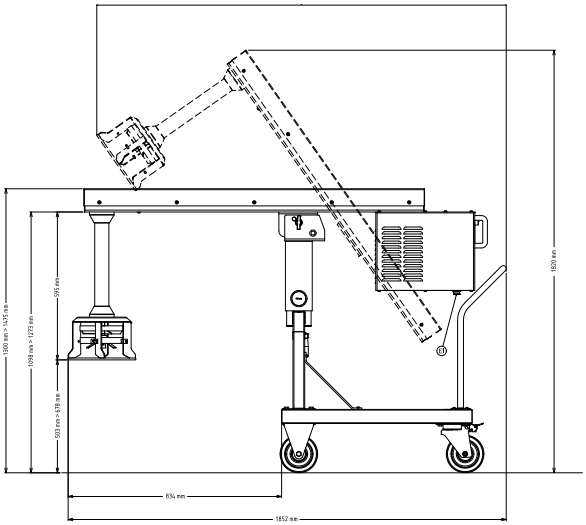

**EI** = Electrical inlet (power)

Top

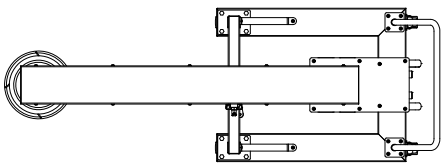

| | |
|---|---|
| **Electric** | |
| **Supply voltage:** | 380-415 V/3 ph/50 Hz |
| **Electrical power, max:** | 3 kW |
| **Total Watts:** | 3 kW |
| **Capacity:** | |
| **Capacity (up to):** | 1000 Litre |
| **Key Information:** | |
| **External dimensions, Width:** | 663 mm |
| **External dimensions, Depth:** | 1852 mm |
| **External dimensions, Height:** | 1475 mm |
| **Shipping weight:** | 220 kg |



The company reserves the right to make modifications to the products without prior notice. All information correct at time of printing.

2026.11.19