ITEM #

MODEL #

NAME #

SIS #

AIA #

Turbo Liquidizers
Turbo Liquidiser for Soups - 2 speeds (830 and 1660 rpm)



603795 (DTBM150-02) Turbo liquidizer, removable mixer tube for soups, 2 speed micro liquidizer - 400V/3/50

Short Form Specification

Item No.

For mixing, liquidising, reducing and emulsifying. Constructed entirely in 18/8 stainless steel. Mounted on a mobile stainless steel trolley. Can be adapted to all recipient shapes: cylindrical, rectangular, etc. No volt release system. Safety device in non-working position and protective ring for the grinding head. 2 speeds motor: 830 and 1660 rpm. Stainless steel micro liquidiser for fish soup available as an option. Supplied with stainless steel micro liquidiser for kitchen use.

APPROVAL:

Main Features

- Used to mix, blend and emulsify vegetable and soups, fruit and vegetable purées, liquid pastries, sauces and much more directly in cooking pots/containers.
- Liquidiser is mounted on a mobile stainless steel trolley and is height adjustable on installation.
- Turbine accelerates the flow of the liquid over the impeller providing a greater throughput and finer grinding.
- Safety device allows the machine to start only when it is in a working position.
- Equipped with protective ring to cover grinding head.
- Suggested for deep and low pans containing between 500 and 1000 liter of liquid.

Construction

- Constructed entirely in stainless steel to offer maximum durability.
- 2 speeds: 830 and 1660 rpm.
- Power: 4500 W.
- IP55 electrical controls and IP34 overall machine.

Included Accessories

- 1 of Stainless steel micro liquidiser for TBM150 (kitchen) PNC 653243

Optional Accessories

- Stainless steel micro liquidiser for TBM150 (fish soup) PNC 650043 ❑
- Stainless steel micro liquidiser for TBM150 (kitchen) PNC 653243 ❑

Turbo Liquidizers
Turbo Liquidiser for Soups - 2 speeds (830 and 1660 rpm)

Front

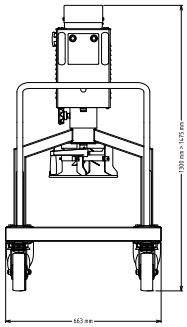

Side

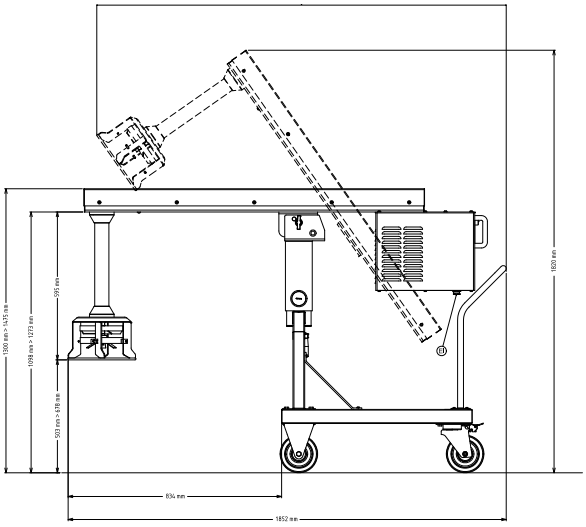

EI = Electrical inlet (power)

Top

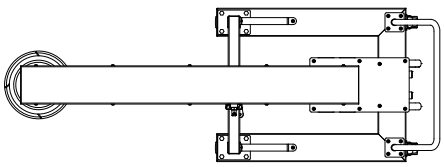

Electric	
Supply voltage:	380-415 V/3 ph/50 Hz
Electrical power, max:	4.5 kW
Total Watts:	4.5 kW
Capacity:	
Capacity (up to):	1000 Litre
Key Information:	
External dimensions, Width:	663 mm
External dimensions, Depth:	1852 mm
External dimensions, Height:	1475 mm
Shipping weight:	185 kg

The company reserves the right to make modifications to the products without prior notice. All information correct at time of printing.

2026.11.19