ITEM #

MODEL #

NAME #

SIS #

AIA #

Vacuum Packers
Vacuum packer 12m3/h table top



602185 (DVP12D) Vacuum Packer, 12 m3/h, table top, digital display

Short Form Specification

Item No.

Table top model in 304 AISI stainless steel with domed transparent PMMA Plexiglas lid. With absolute-type vacuum sensor for vacuum level control, no calibration needed. Pressure chamber with rounded corners for easy cleaning. Digital control panel with 10 editable user programs (vacuum, extra vacuum, sealing time, gas percentage), including cycle for jars and 1 adjustable deaeration cycle. External vacuum in bags or containers possible. Display shows alarm messages if malfunctions are detected (e.g. oil cleaning cycle needed). 2 PE filling plates included. Sealing bar length 310mm. Easy access for service through hinged opening of the body. Optional Bluetooth label printer available, for HACCP compliance.

APPROVAL:

Main Features

- Table-top vacuum packer with oil lubricated vacuum pump.
- Vacuum level control through high-precision, absolute-type vacuum sensor, which does not require calibration.
- Pressure chamber made of constant thickness, hydroformed, stainless steel with rounded corners for easy cleaning.
- Sturdy, transparent PMMA (plexiglass) lid with rounded edges; opens automatically at the end of the cycle.
- Control panel, resistant to liquids, humidity, dirt and dust.
- 10 editable user programs (vacuum, extra vacuum, sealing time, gas percentage).
- 1 vacuum cycle for jars/containers.
- 1 adjustable deaeration cycle.
- Adjustable sealing time 0.1 to 6 seconds.
- Specific pump oil cleaning cycle (H2Out).
- Automatic warnings if food needs cooling down (hot), failure in the packing process, gas missing, oil change.
- Pre-arranged for external vacuum packing in containers by connecting a specific pipe to the air extraction nozzle (available as spare part).
- 2 PE filling plates included.
- Sealing bar 310 mm, easily removable for cleaning.
- Unit pre-arranged to be connected to an inert gas system.

Construction

- Entirely constructed in 304 AISI stainless steel.
- Easy access for service through hinged opening of the body.

Optional Accessories

- Stainless steel trolley 570x630x700mm (H) PNC 650242 ❑

Vacuum Packers
Vacuum packer 12m3/h table top

Front

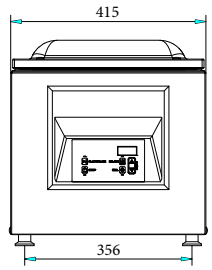

Side

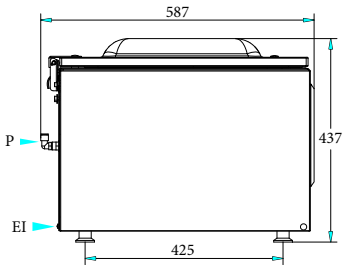

EI = Electrical inlet (power)

Top

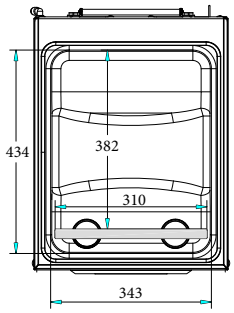

Perspective

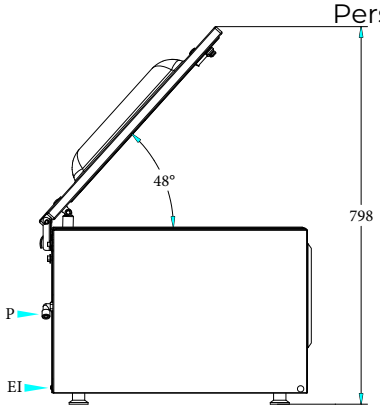

Other

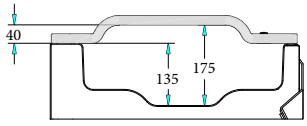

Electric

Supply voltage:	220-240 V/1N ph/50-60 Hz
Total Watts:	0.7 kW

Key Information:

Filling board nr:	2
Gas nozzles:	2
External dimensions, Width:	415 mm
External dimensions, Depth:	587 mm
External dimensions, Height:	437 mm
Net weight (kg):	46.5
Well Capacity:	19 lt
Pump:	12 m^3/h
Capacity:	19 kg
Sealing bar position:	Front
Sealing bar length:	310 mm
Max chamber (chamber + cover) dimensions:	434 x 343 x 175 mm
Chamber working dimensions:	382 x 343 x 135 mm

The company reserves the right to make modifications to the products without prior notice. All information correct at time of printing.

2026.11.20