ITEM #

MODEL #

NAME #

SIS #

AIA #

Vacuum Packers
Vacuum packer 20m3/h table top



602187 (DVP20T) Vacuum Packer, 20 m3/h, table top, touch screen

Short Form Specification

Item No.

Table top model with user friendly 5" touch screen control panel. 4 preset 'Gourmet' cycles (powders & spices, marinade in bags, marinade in containers, sauces). 3 preset cycles 'Gasplus' with inert gas injection (fragile foods). 4 vacuum cycle for jars. 2 preset cycles for preservation and sous vide cooking. 1 programmable deaeration program on eight vacuum phases and eight pause phases ('Degas'). 10 editable user programs (vacuum, extra vacuum, sealing time, gas percentage). ''Softair' slow air return at the end of the cycle, more gentle on food (avoid deformation). With absolute-type vacuum sensor for vacuum level control, no calibration needed. Constructed in 304 AISI stainless steel with domed transparent PMMA Plexiglas lid. Pressure chamber with rounded corners for easy cleaning. External vacuum in bags or containers possible. Display shows alarm messages if malfunctions are detected (e.g. oil cleaning cycle needed). 3 PE filling plates included. Sealing bar length 410mm. 5 display languages: EN, FR, IT, DE, ES. Easy access for service through hinged opening of the body. Optional

Bluetooth label printer available, for HACCP compliance.

APPROVAL:

Main Features

- Table-top vacuum packer with oil lubricated vacuum pump.
- Vacuum level control through high-precision, absolute-type vacuum sensor, which does not require calibration.
- Pressure chamber made of constant thickness, hydroformed, stainless steel with rounded corners for easy cleaning.
- Sturdy, transparent PMMA (plexiglass) lid with rounded edges; opens automatically at the end of the cycle.
- User friendly interface thanks to a 5" touch screen control panel, made of tempered glass, resistant to liquids, humidity, dirt and dust.
- 5 display languages: EN, FR, IT, DE, ES.
- 10 editable user programs (vacuum, extra vacuum, sealing time, gas percentage).
- 4 preset (Gourmet) cycles for food processing.
- 3 preset cycles (Gasplus) with inert gas injection (for delicate/soft foods).
- 4 vacuum cycles for jars/containers.
- 2 preset cycles for preservation and sous vide cooking.
- 1 programmable deaeration program on eight vacuum phases and eight pause phases (Degas).
- Softair slow air return at the end of the cycle, more gentle on food (avoids deformation).
- Adjustable sealing time 0.1 to 6 seconds.
- Specific pump oil cleaning cycle (H2Out).
- Automatic warnings if food needs cooling down (hot), failure in the packing process, gas missing, oil change.
- Pre-arranged for external vacuum packing in containers by connecting a specific pipe to the air extraction nozzle (available as spare part).
- 3 PE filling plates included.
- Sealing bar 410 mm, easily removable for cleaning.
- Unit pre-arranged to be connected to an inert gas system.

Construction

- Entirely constructed in 304 AISI stainless steel.
- Easy access for service through hinged opening of the body.

The company reserves the right to make modifications to the products without prior notice. All information correct at time of printing.

2026.11.20

Optional Accessories

- Inclined shelf to vacuum liquids, 400mm (for models with 410mm sealing bar or multiples) — PNC 650241 ❑
- Stainless steel trolley 570x630x700mm (H) — PNC 650242 ❑
- Label printer, bluetooth, for 50x60mm labels, with display in English or Italian — PNC 650243 ❑
- UK power cord (2m) for vacuum packers — PNC 650244 ❑

The company reserves the right to make modifications to the products without prior notice. All information correct at time of printing.

2026.11.20

Vacuum Packers
Vacuum packer 20m3/h table top

Front

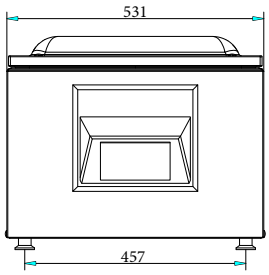

Side

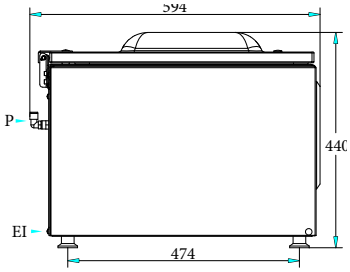

EI = Electrical inlet (power)

Top

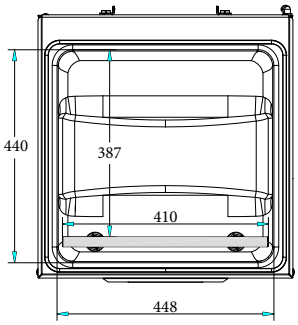

Other

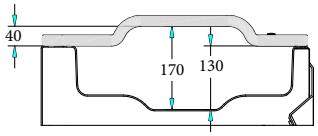

Perspective

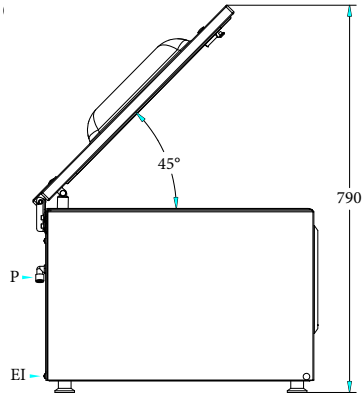

Electric

Supply voltage:	220-240 V/1N ph/50-60 Hz
Total Watts:	0.9 kW

Key Information:

Filling board nr:	3
Gas nozzles:	2
External dimensions, Width:	531 mm
External dimensions, Depth:	594 mm
External dimensions, Height:	440 mm
Net weight (kg):	62
Well Capacity:	25.2 lt
Pump:	20 m^3/h
Sealing bar position:	Front
Sealing bar length:	410 mm
Max chamber (chamber + cover) dimensions:	440 x 448 x 170 mm
Chamber working dimensions:	387 x 448 x 130 mm

The company reserves the right to make modifications to the products without prior notice. All information correct at time of printing.

2026.11.20